# Assembly Instructions

**CAUTION** : You must read these Assembly Instruction before you proceed

## Care & Maintenance

- Not for commercial use. For residential use only.

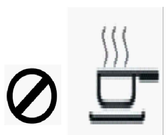

- Do not put hot items directly on furniture surface.

- Do not clean furniture with harsh cleansers or polish.

- To obtain the longest lifespan of your outdoor product minimizing exposure to direct sunlight is recommended.

- Children should not climb or jump on the furniture.

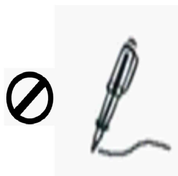

- Do not write on furniture without a padded barrier to protect the surface.

- To obtain the longest lifespan of your outdoor products, avoid extended and lengthy exposure to rain, snow, and direct sunshine. Whenever possible cover the product and /or place under patio or awnings.

- Stains may be removed with mild soap solution and damp cloth.

- Keep away from sources of ignition.

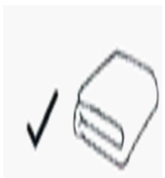

- Dust and pick-up spills using a clean, non-colored, lint-free cloth.

Please look into the Seat Panel for hardware packs.

# FOLDING CHAIR

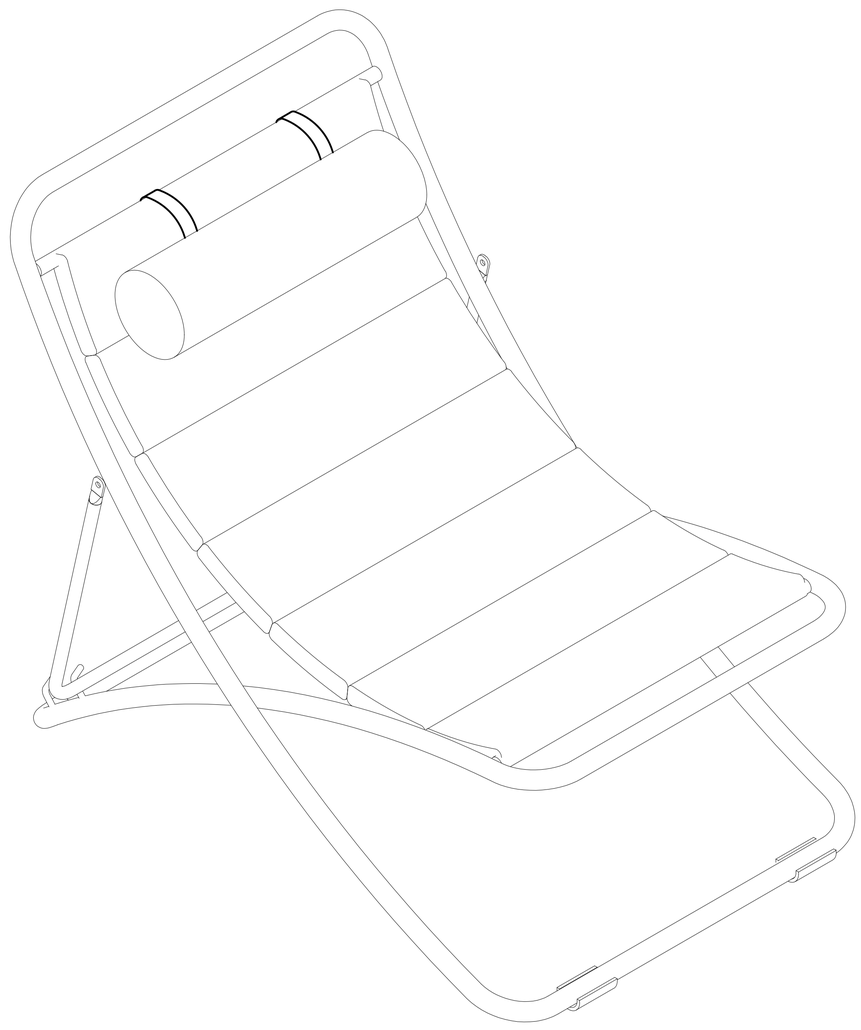

**CAUTION**: This **Folding Chair** is NOT a TOY

Keep your child / children at bay during the assembly process.

For turning the **Folding Chair** and to prevent damage to the **Folding Chair**, 02 adults may be needed to execute this action

# Parts List

| Label | Picture | Description | Qty |
|---|---|---|---|
| A | 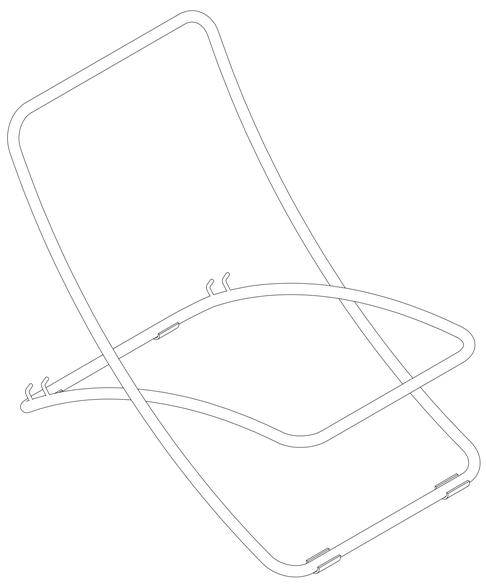 | Chair Frame | 1 |
| B | 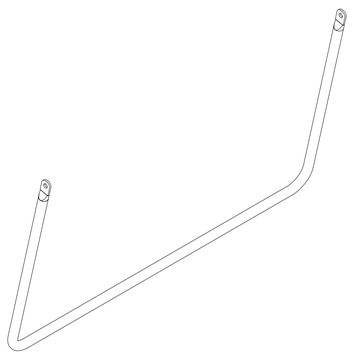 | U-Support Bar | 1 |
| C | 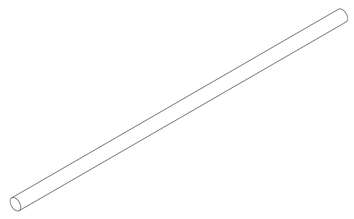 | Cross Bar | 2 |
| D | 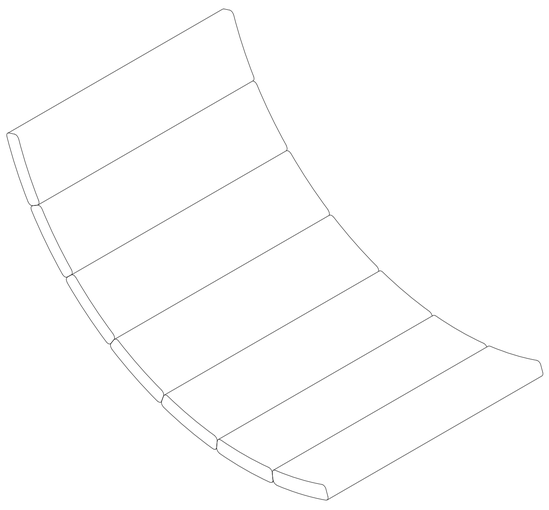 | Cushion | 1 |
| E | 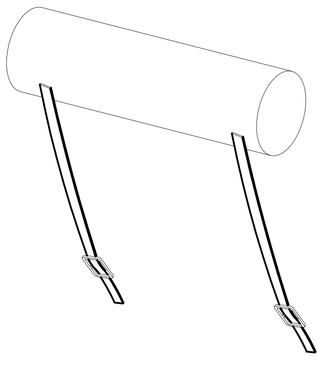 | Pillow | 1 |

# Hardware:

| No. | Picture | Description | Q.ty |
|---|---|---|---|
| ① | | Bolt (M6x25) | 3 |
| ② | | Bolt (M6x40) | 5 |
| ③ | | Plastic Washer | 3 |
| ④ | | Steel Washer | 3 |
| ⑤ | | Allen Wrench | 2 |

## Assembly Preparation:

### Before Begining Assembly:

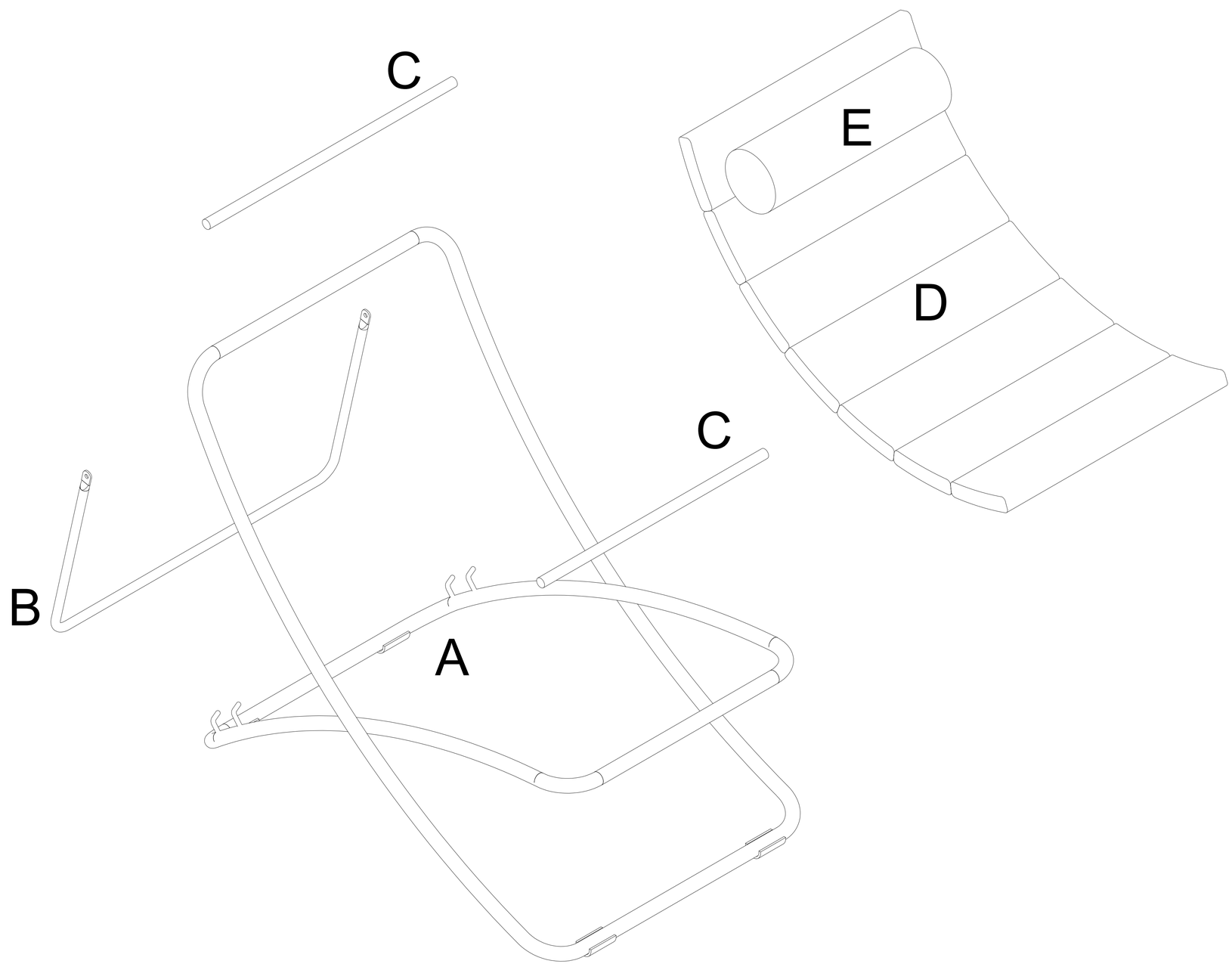

- Read instructions, cover to cover

- Have 2 adults on hand for assembly

- Do not assemble on the flooring or carpet

- Assemble on a clean, non-marring surface (packing foam)

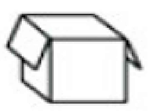

- Save all packaging until finished.

# Assembly Steps:

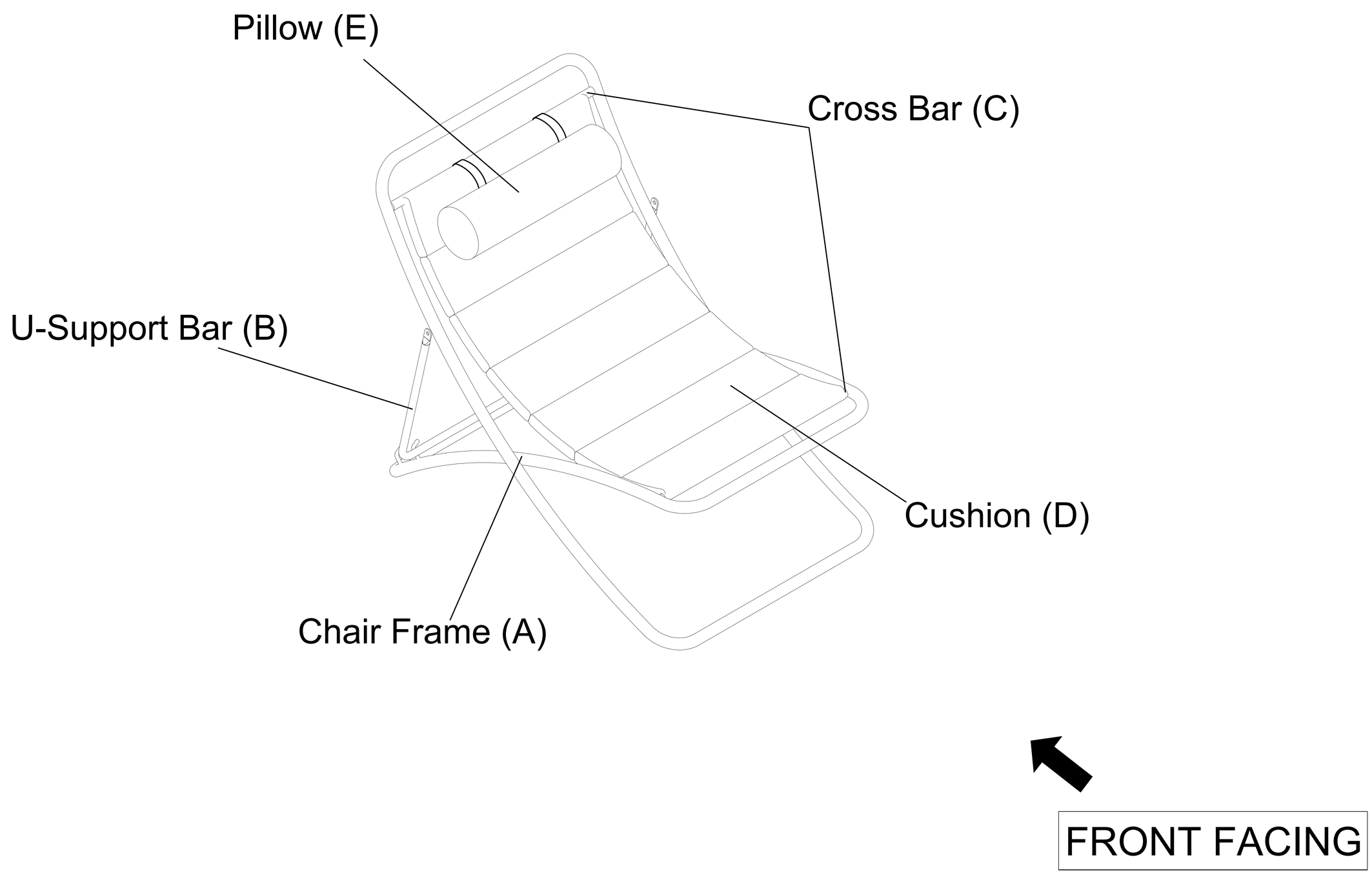


This **Folding Chair** has multiple parts and may require up to 60 minutes to assemble. To give you an overview of the **Folding Chair** parts, the above picture is to help you put the various parts into perspective. Please read through the instructions below to familiarise the parts and steps before assembly.

## Step 1:

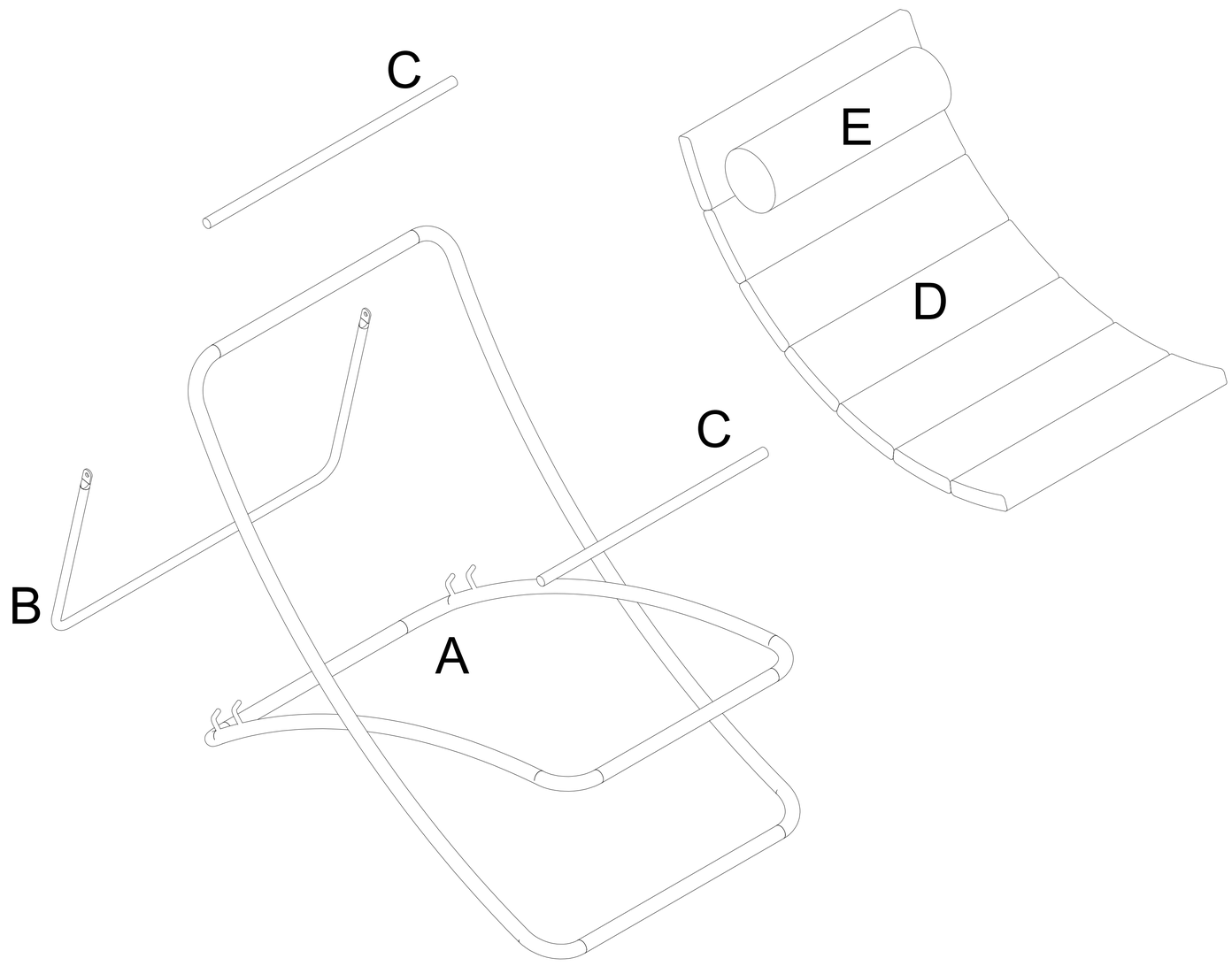


Unpack and place all the parts on a clean, non-marring surface.

## Step 2:

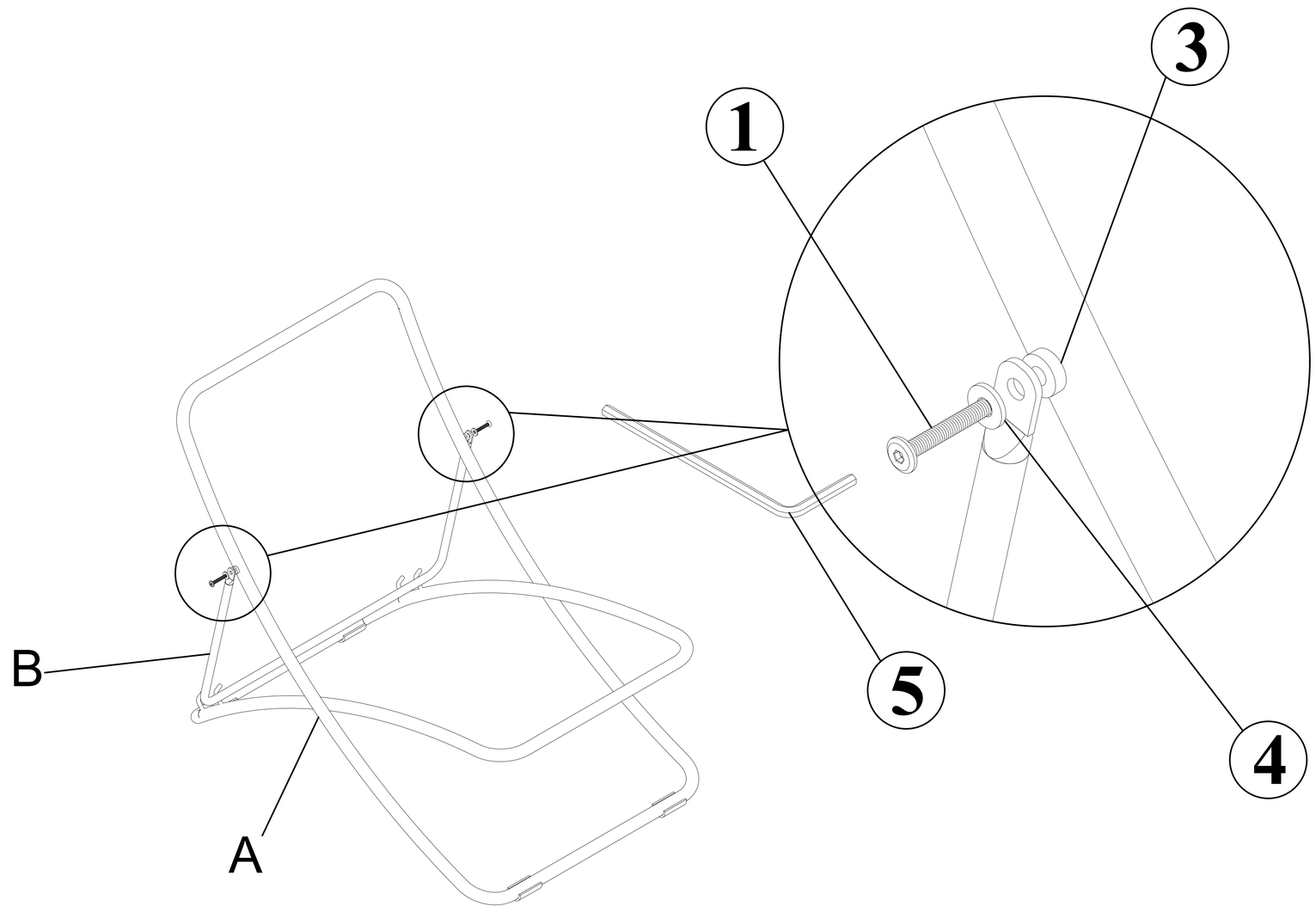


Fix the U-Support Bar (B) to Chair Frame (A) by using 2pcs Bolts (①), 2pcs Plastic Washer (③) and 2pcs Steel Washer (④) by Allen Wrench (⑤).
**Fully tighten the Bolts.**

## Step 3:

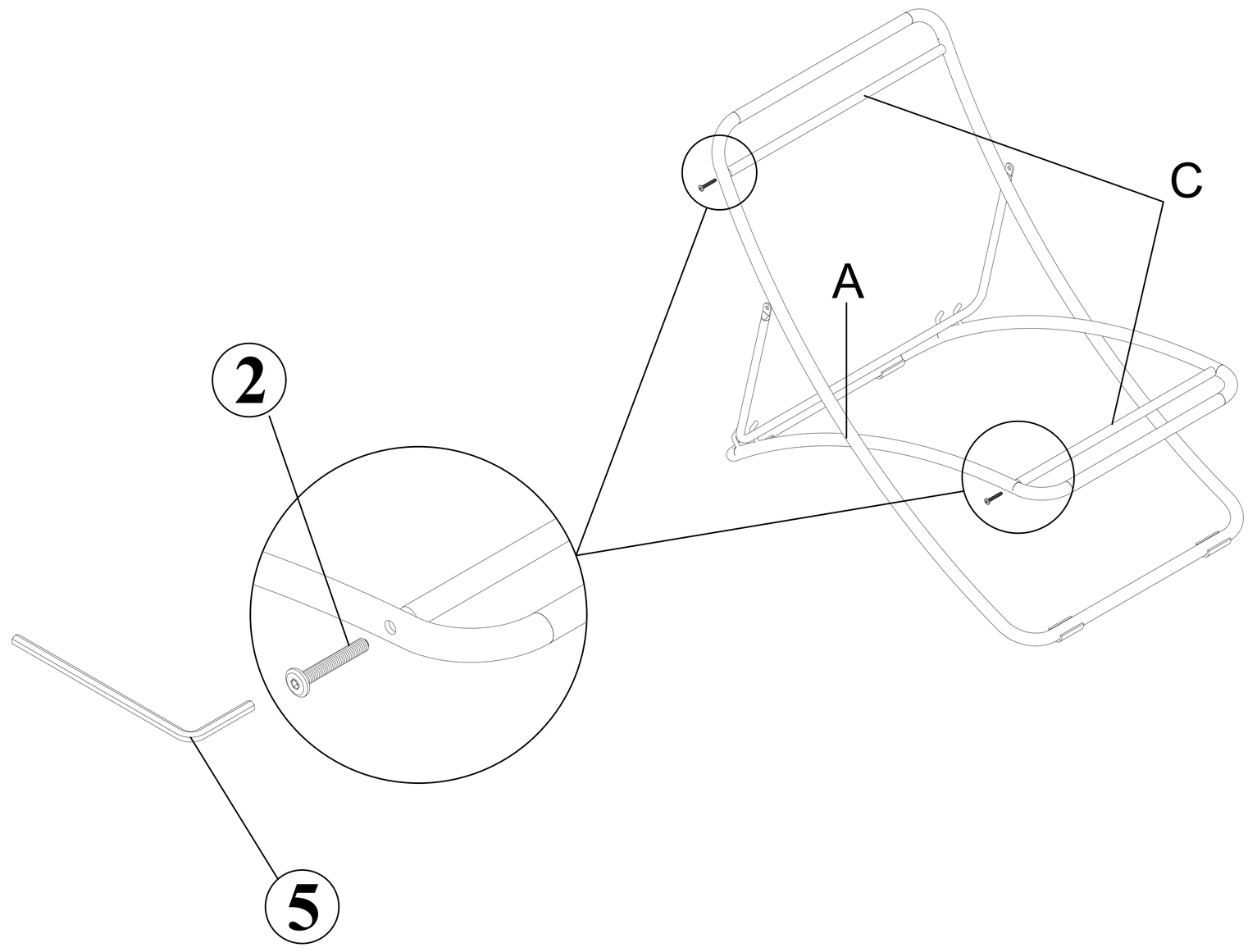


Fix 2pcs Cross Bar (C) to the **Assembled parts in Step 2** by using 2pcs Bolt (②) by Allen Wrench (⑤).
**DO NOT fully tighten the Bolts.**

## Step 4:

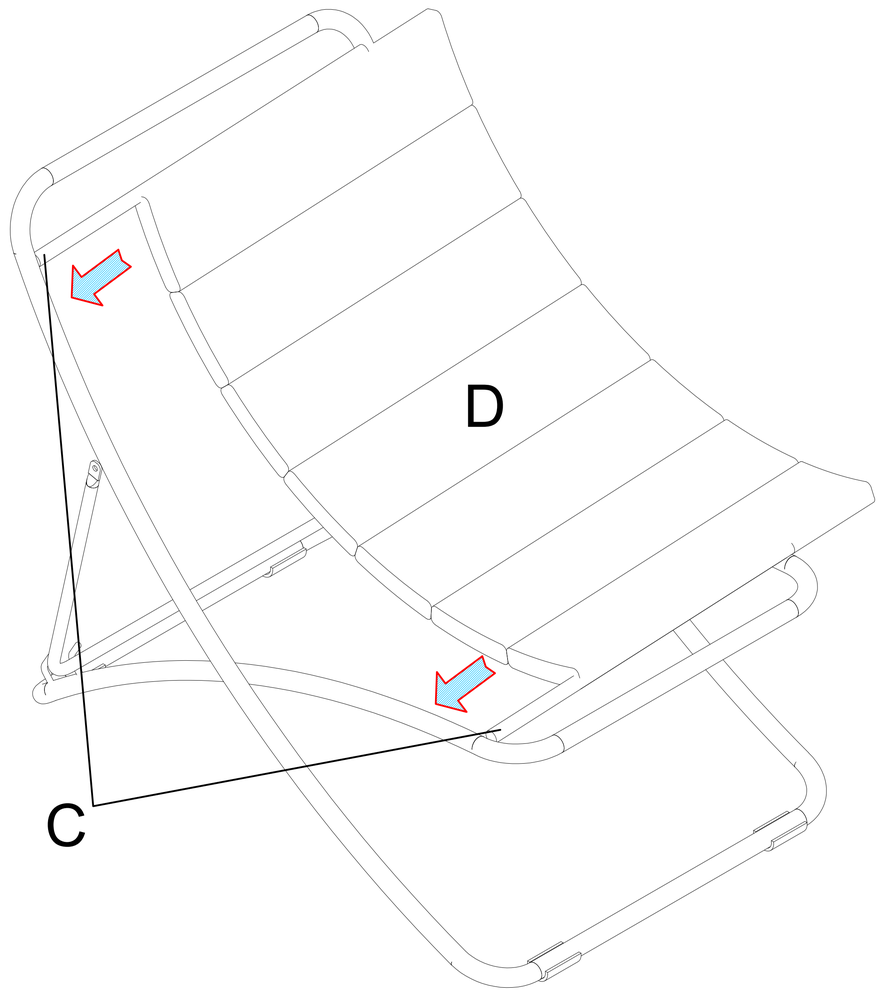


Insert Seat Cushion (D) to these Cross Bar (C) as shown above

## Step 5:

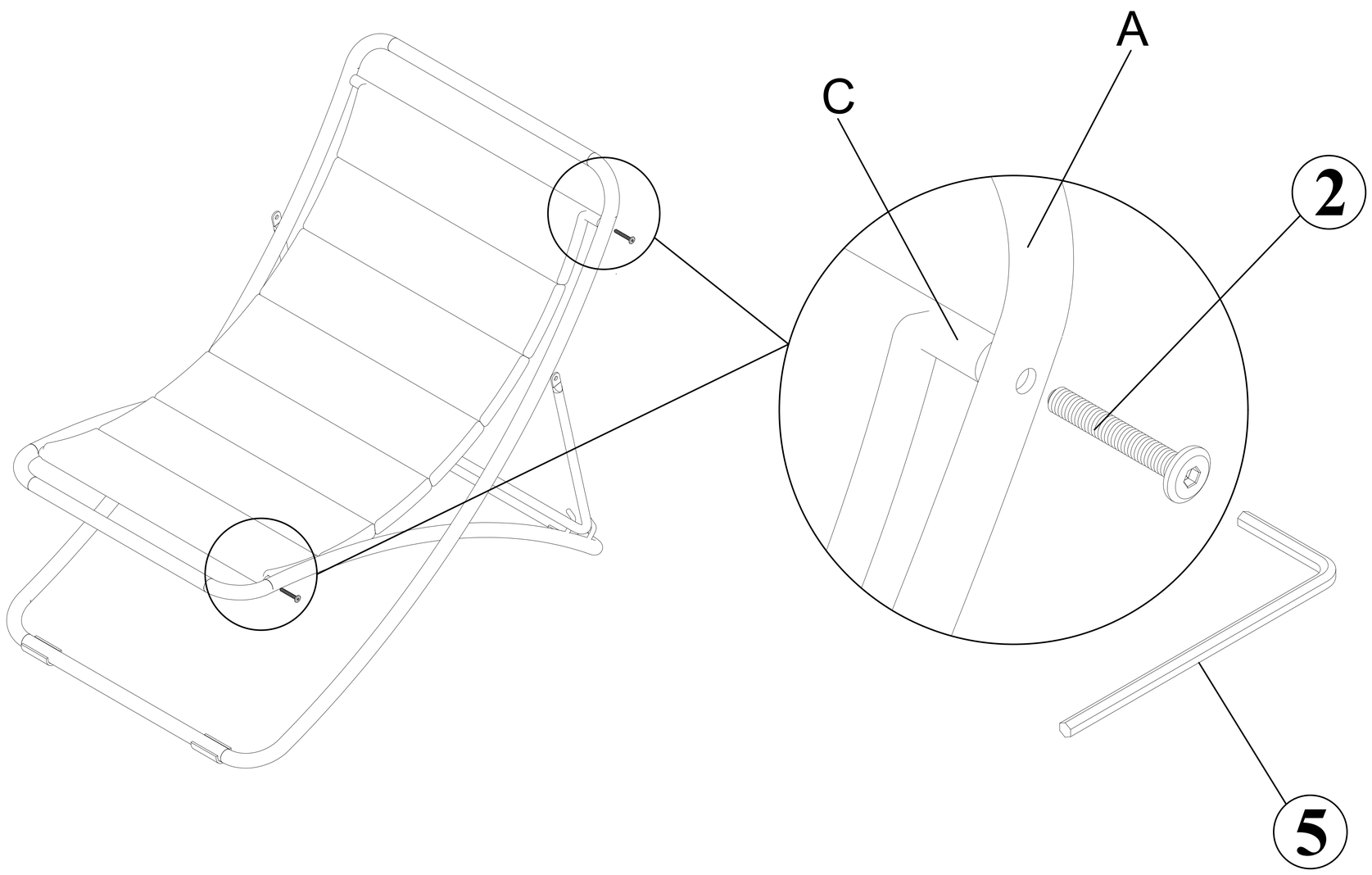


Fix 2pcs Cross Bar (C) to the **Assembled parts in Step 2** by using 2pcs Bolt ( 2 ) by Allen Wrench (⑤).
**DO NOT fully tighten the Bolts.**

## Step 6:

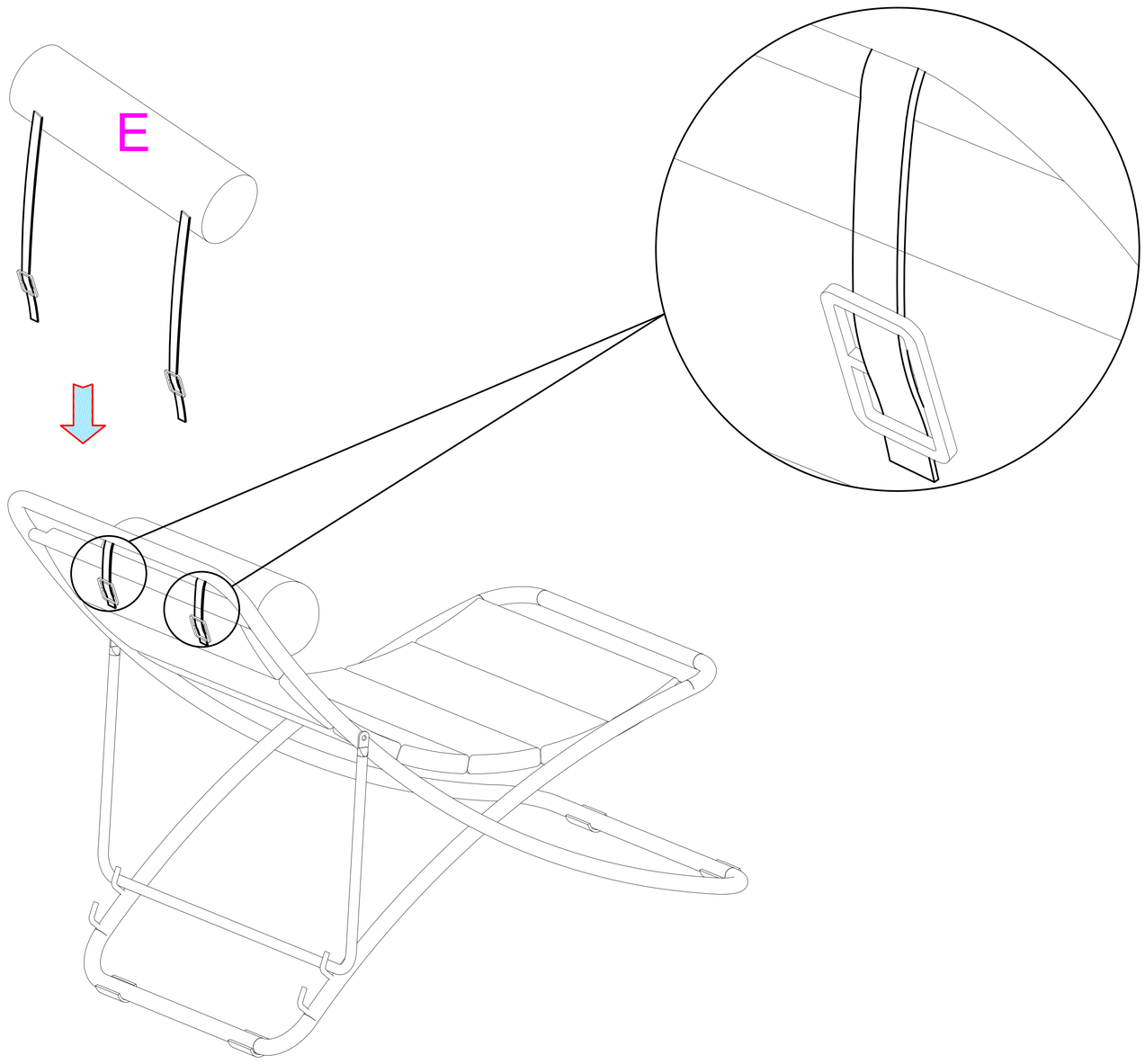


Insert Pillow (E) and Tighting by Fabric Straps at the bottom Cushion (D) as shown above

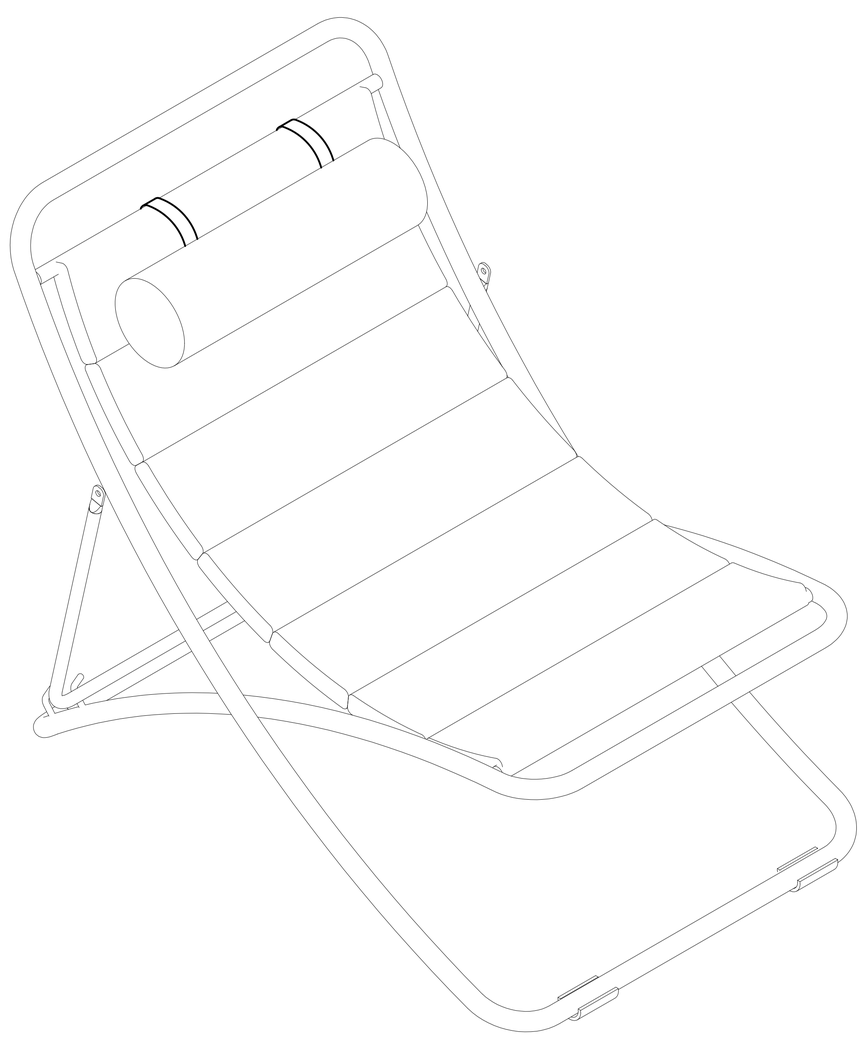

Inspect it and make sure all parts are adequately connected.
Gently and gracefully, sit onto the all Bench. This will help to align all the parts at all joint areas.
Then get off the Bench and in a sequential manner, gradually tighten all Screws at all joints until evenly connected.
If there are still wobbles, loosen the Screws and execute this same process.
**WARNING!! IF BENCH IS NOT STABLE, IT COULD LEAD TO DAMAGING THE PRODUCT.**
**Your Folding Chair is ready for use.**
**This Folding Chair can only be used on a flat, level surface.**