CLASSEUR RIDEAU 110 DOUBLE

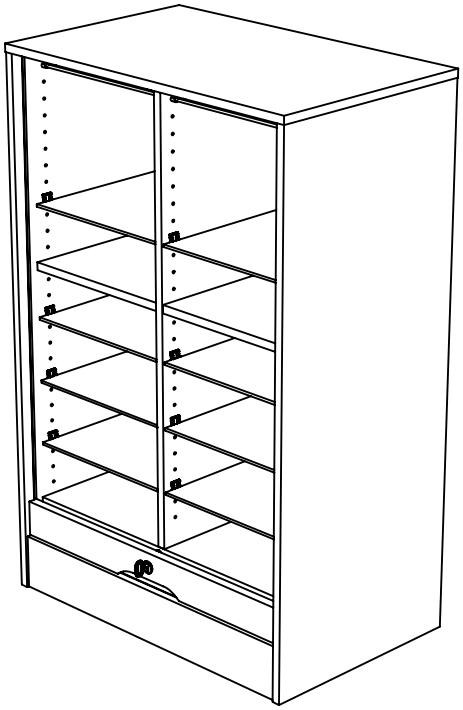

A 11mm x20	B 12mm x24	C 8 x 35 x12	F x32	G x1	H x1	J x1	JB 8mm x4	K x8
L x4	S 6 x 10.5 x4	UP x1						
2m 1.5m	25 mn	x 2						

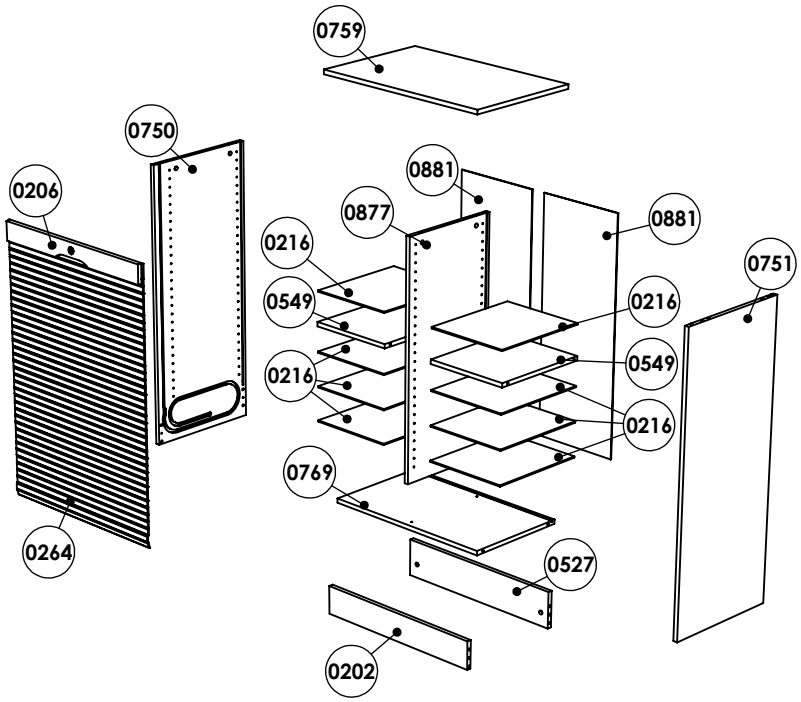

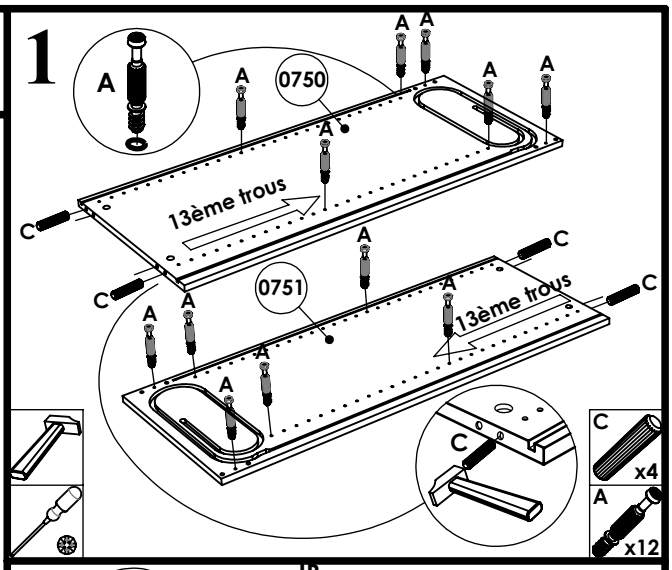

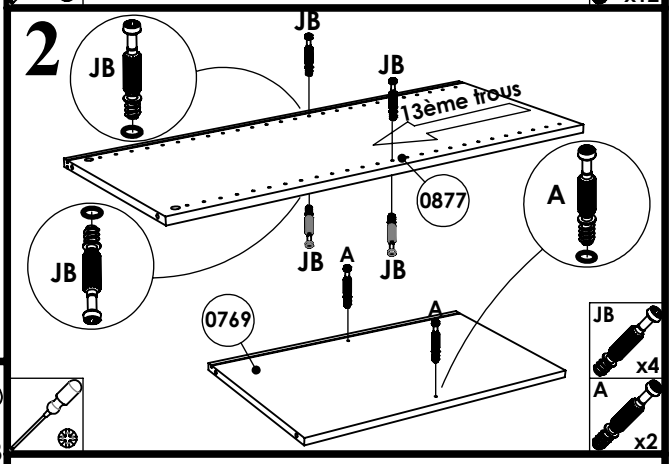

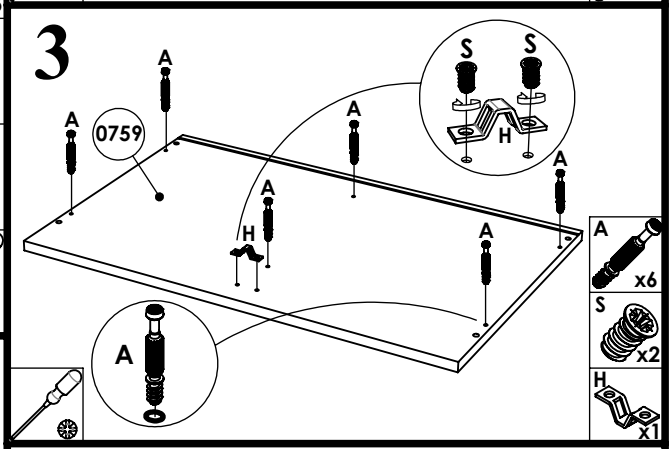

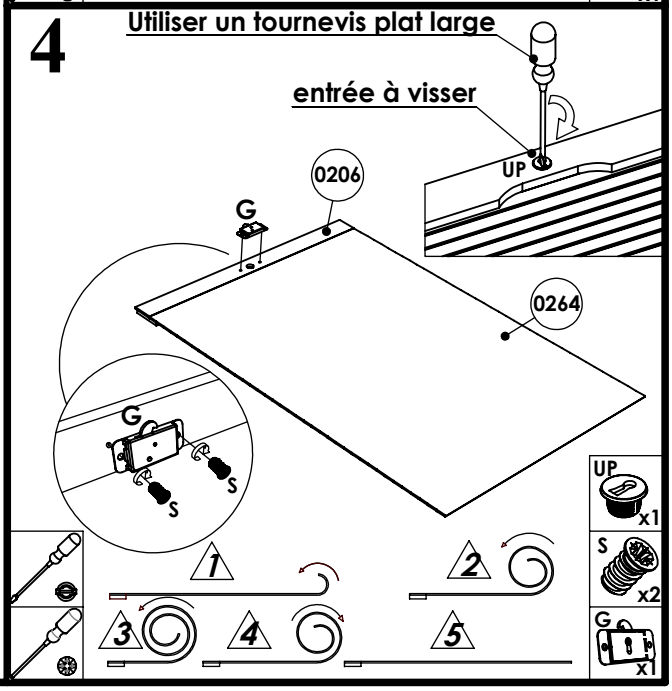

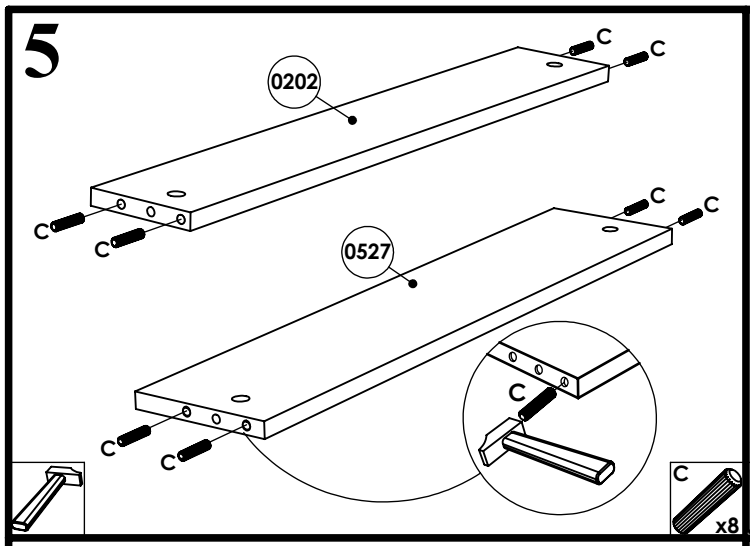
5
0202
0527
C
x8

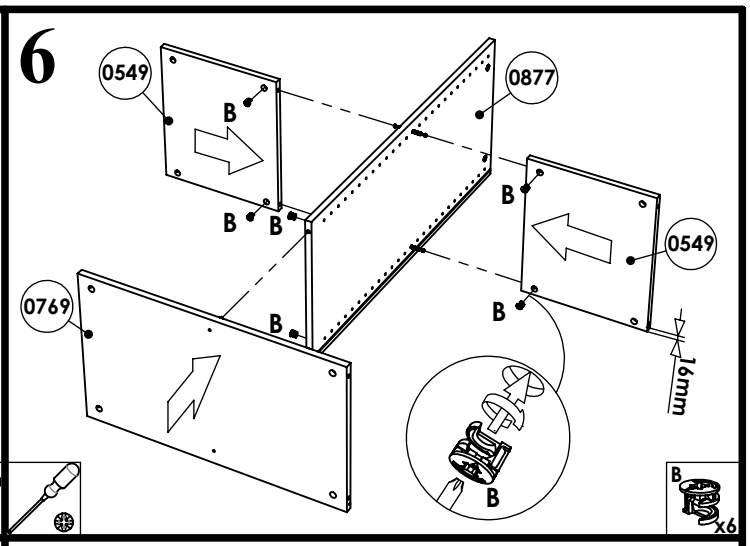
6
0549
0877
0549
0769
B
16mm
x6

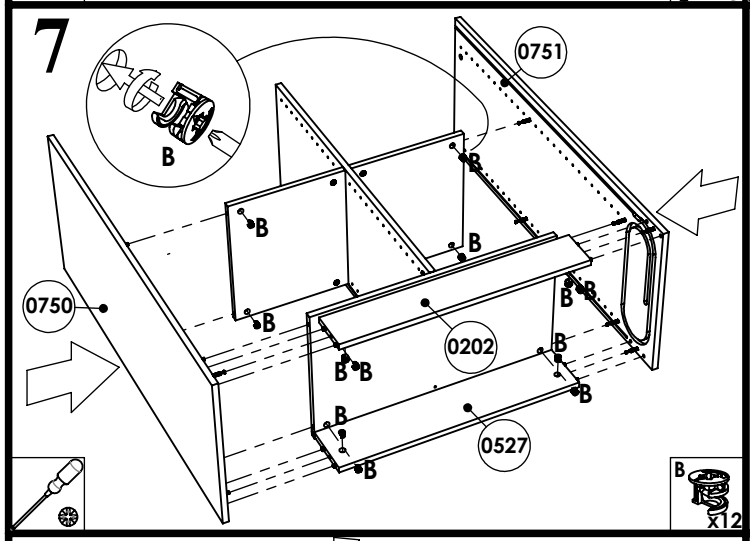
7
0751
0750
0202
0527
B
x12

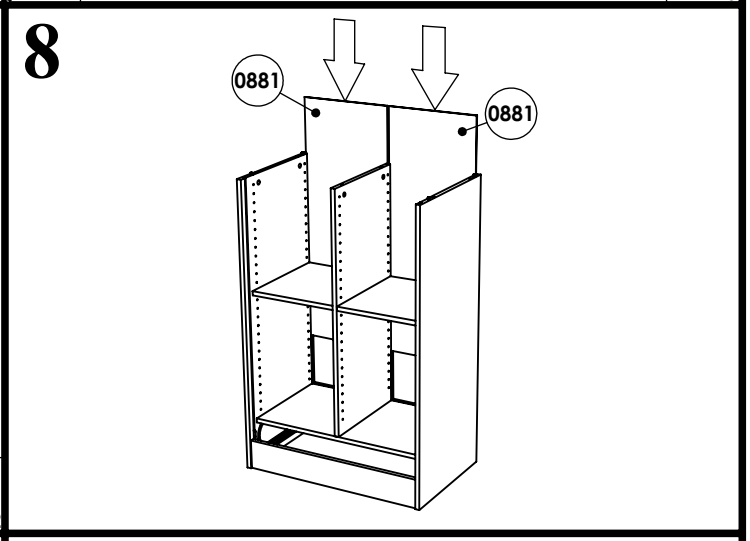
8
0881
0881

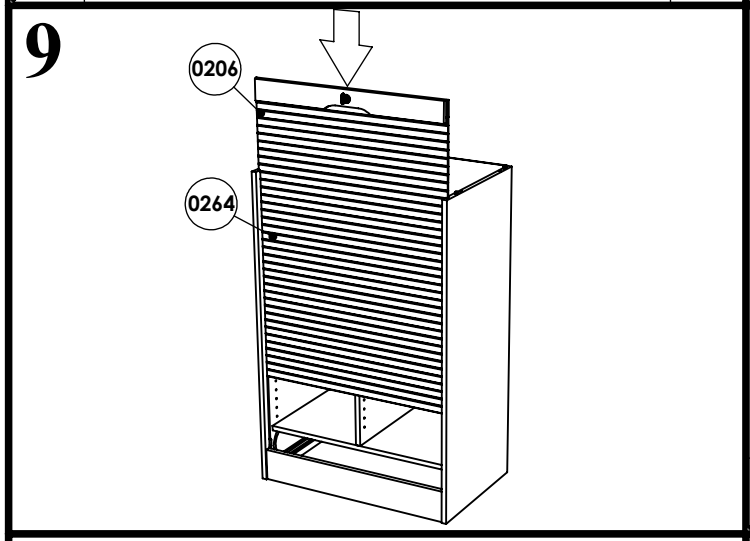
9
0206
0264

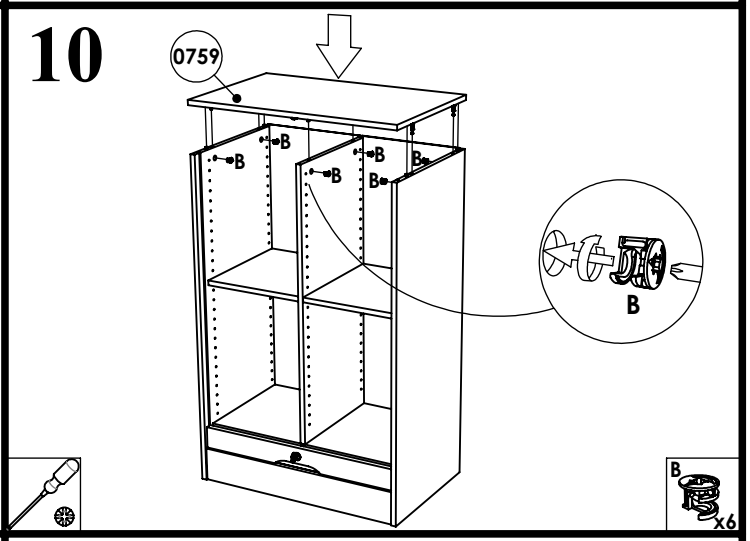
10
0759
B
x6

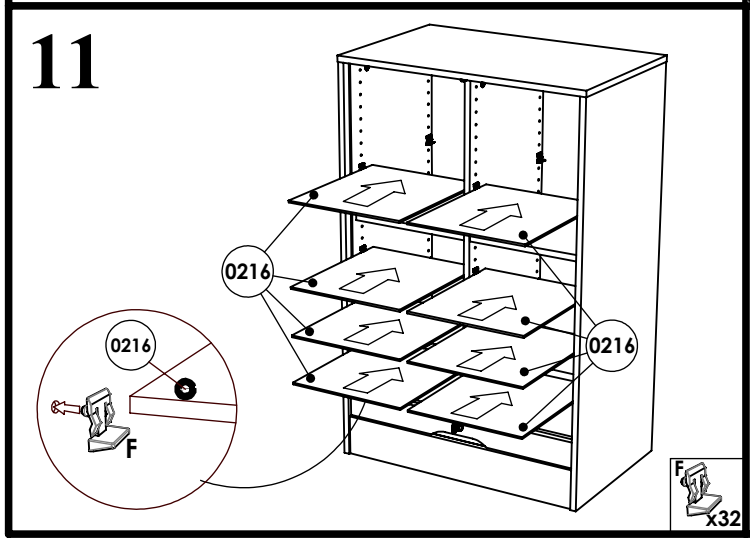
11
0216
0216
0216
F
x32

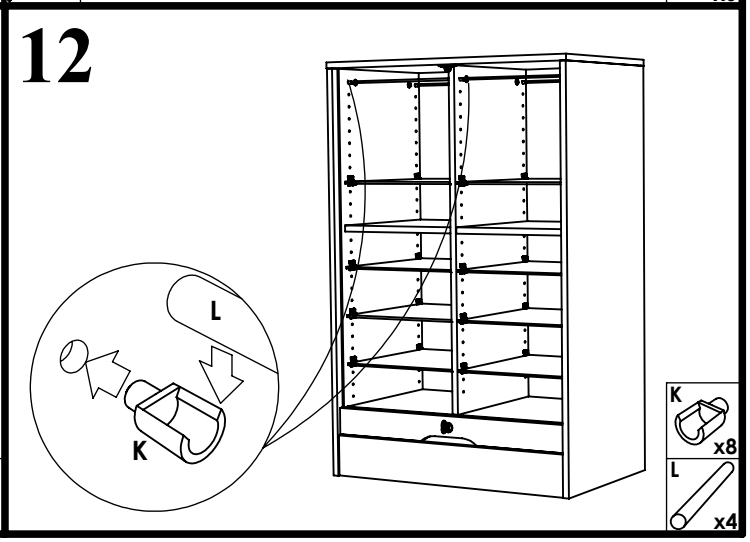
12
L
K
x8
x4