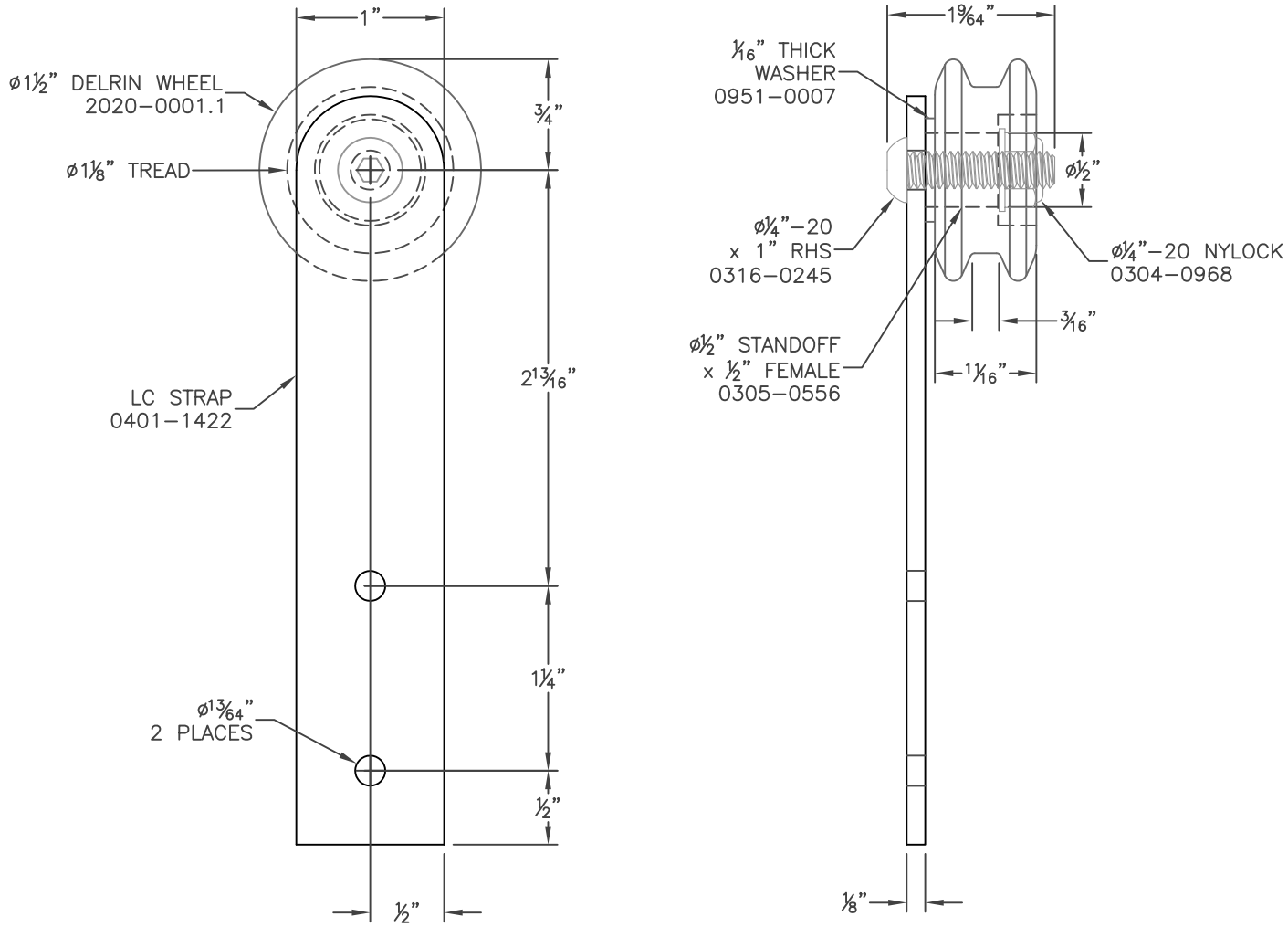

PART# PREFIX FINISH NOTE:

BLACK	–00XX
NEW PENNY	–01XX
ANTIQUE BRONZE	–05XX
UNFINISHED	–25XX
CLEAR COAT	–27XX
MP109	–30XX
MILL STAINLESS	–40XX
BRUSHED SS	–50XX
WEATHERED RUST	–60XX
POWDER COAT	–70XX
MACHINED COPPER	–74XX
BRONZE	–80XX
PHOTOSTEEL	–85XX
BRUSHED NICKEL	–90XX
HYDRO–GRAFX	–99XX

LEATHERNECK
HARDWARE, INC.
1017 BAHLS ST. - DANVILLE, IL 61832

THIS PRINT IS THE PROPERTY OF LEATHERNECK HARDWARE, INC. AND IS LOANED TO THE RECIPIENT SUBJECT TO RETURN UPON DEMAND. ALL CONTENTS HEREIN ARE CONFIDENTIAL AND MUST NOT BE COPIED OR SUBMITTED TO OUTSIDE PARTIES FOR EXAMINATION WITHOUT THE EXPRESS WRITTEN CONSENT OF LEATHERNECK HARDWARE, INC.

PART #:	CUSTOMER:	ORDER #:	DRAWN BY:	DRAWING NAME:
2020–XX01	–	–	MICHAEL H	HANGER202
REVISED DATES:				
DESCRIPTION: #202 HANGER (STRAIGHT) – SHUTTER SERIES LITE –		QUANTITY: EACH	DATE: 8/1/17	