OASIQ
33 35TH STREET, INDUSTRY CITY BLDG.5, A405, BROOKLYN, NY 11232
T 212.355.0625 F 212.355.0628 WWW.OASIQ.COM

320-AC Dining Armchair
W 23 7/8" D 23 3/8" H 26 3/4"
AH 26 3/4" SH 15 3/4" OSH 17 3/4"
20.04 lbs
Teak & black PP webbing

Cushions: 320-AC-X
Seat cushion:
L 21 1/2" W 23 1/2" H 2"
Back cushion: L 15" W 25"

FABRIC AVAILABLE FOR ASTOR, HAMILTON, MADISON, DELANCEY & LIMITED COLLECTIONS

Canvas Natural 5404-0000

Canvas Vellum 5498-0000

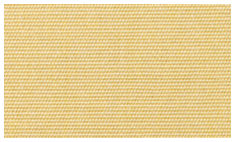
Canvas Wheat 5414-0000

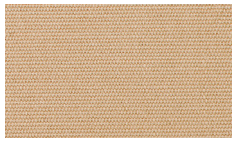
Canvas Camel 5468-0000

Canvas Granite 5402-0000

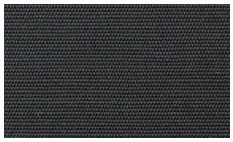
Canvas Black 5408-0000

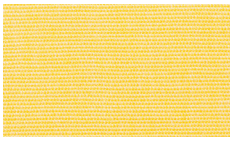
Canvas Buttercup 5438-0000

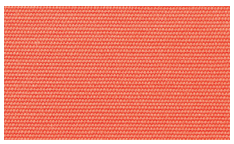
Canvas Melon 5415-0000

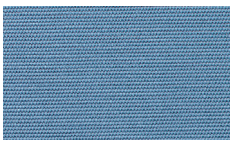
Canvas Sapphire Blue 5452-0000

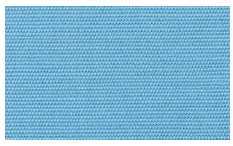
Canvas Sky Blue 5424-0000

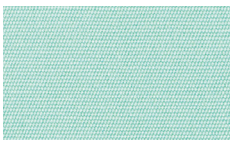
Canvas Glacier 5428-0000

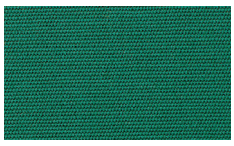
Canvas Forest Green 5446-0000

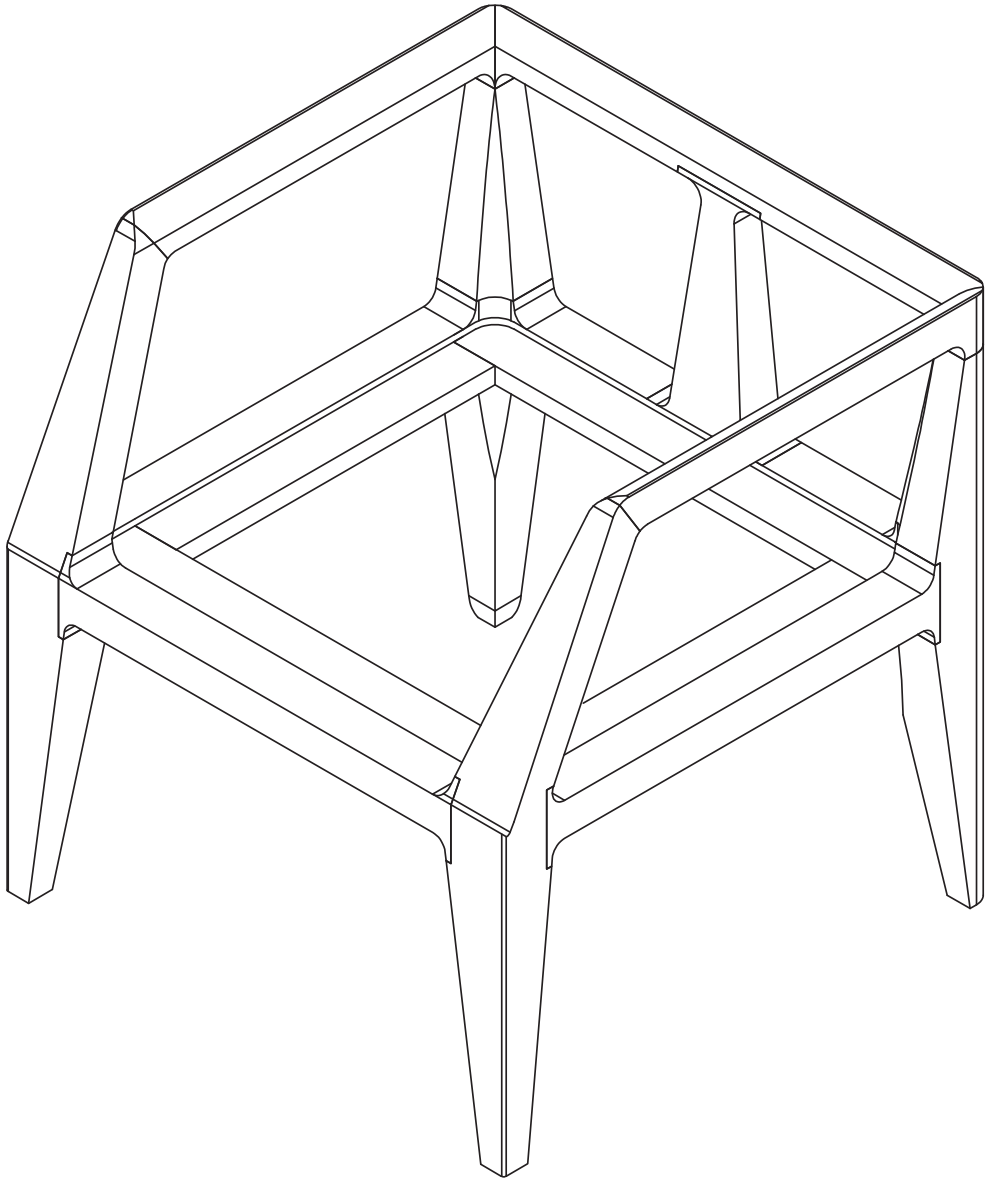

ISO VIEW

ISO

OASIQ	DWG.NO: FAEDG0005T-10(A702096)	TITLE : ISO VIEW	DIM EXT: 605x594.3x680 MM.	MATERIAL: TEAK	DRAWN BY : AEKCHAI	FINISH DATE : 13-02-07	AEK	SCALE : 1:1	P.3
						BEGIN DATE : 15-09-06	AEK		

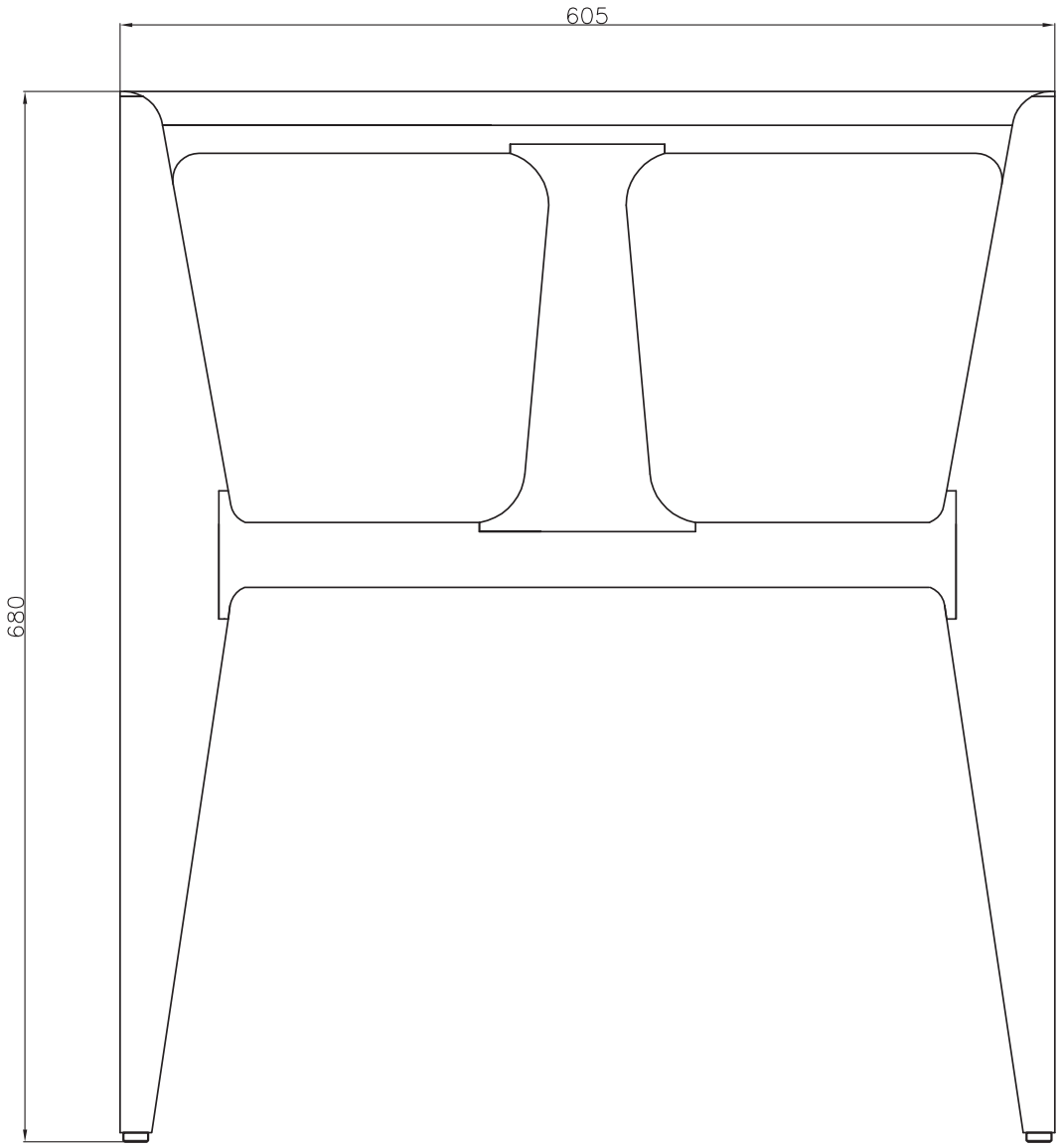

FRONT

EF

OASIQ	DWG.NO: FAEDG0005T-10(A702096)	TITLE : FRONT	DIM EXT: 605x594.3x680 MM.	MATERIAL: TEAK	DRAWN BY : ANON	FINISH DATE : 14/02/07 BEGIN DATE : 15-09-06	NON AEK	SCALE : 1:1	P.5

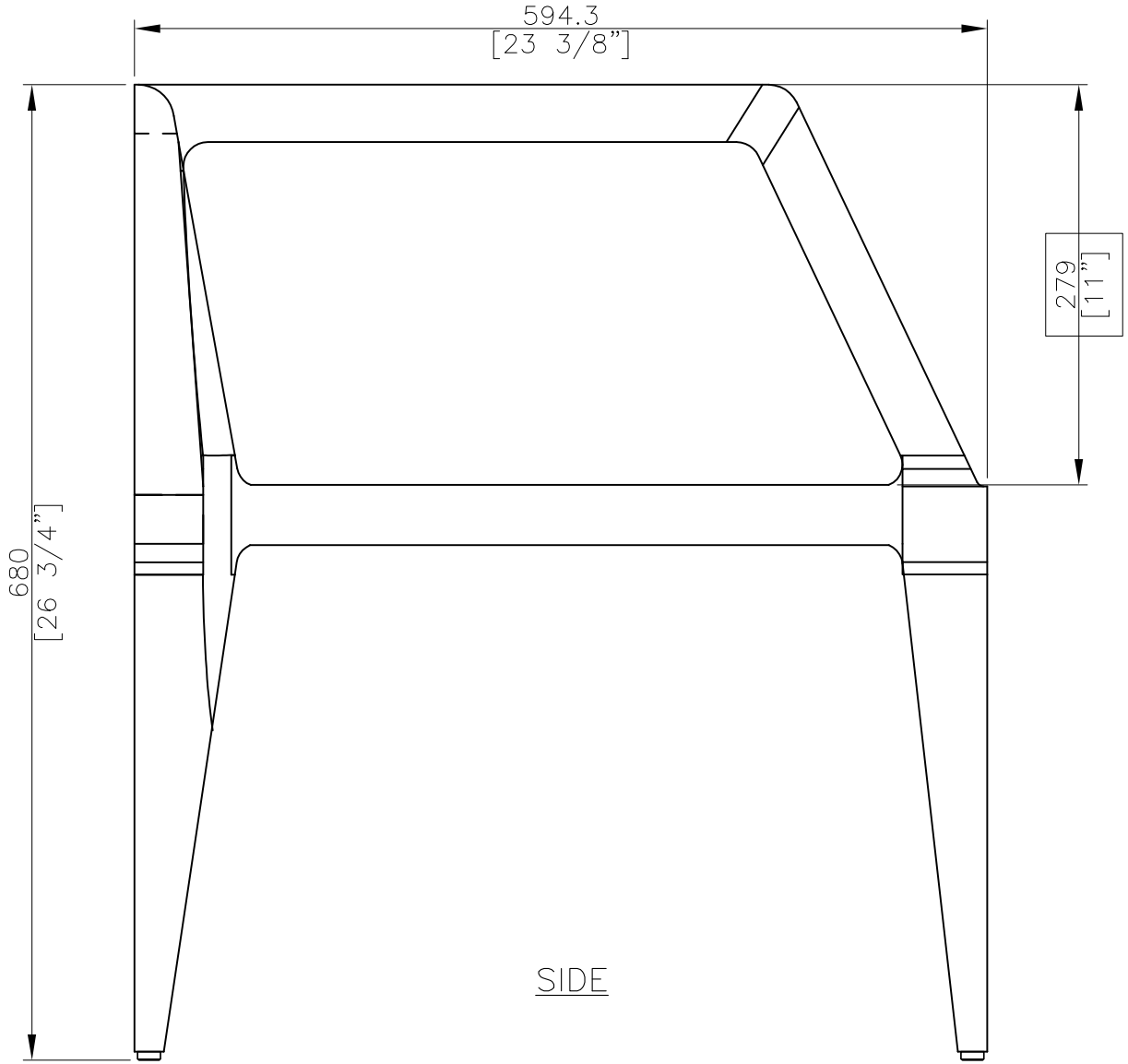

ES

OASIQ	DWG.NO: FAEDG0005T-10(A702096)	TITLE : SIDE	DIM EXT: 605x594.3x680 MM.	MATERIAL: TEAK	DRAWN BY : ANON	FINISH DATE : 14/02/07 BEGIN DATE : 15-09-06	NON AEK	SCALE : 1:1	P.6

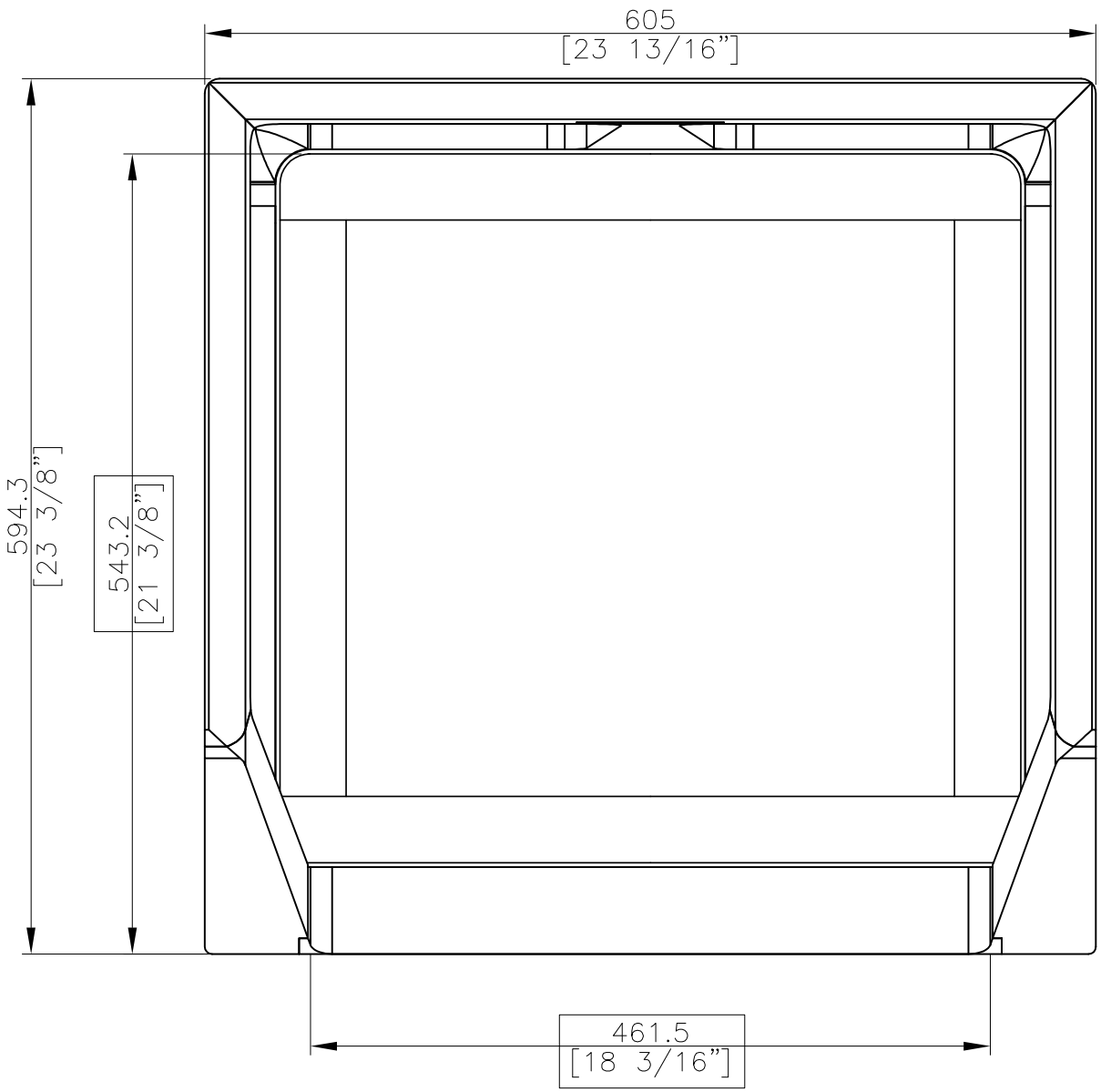

TOP

ET

OASIQ	DWG.NO: FAEDG0005T-10(A702096)	TITLE : TOP	DIM EXT: 605x594.3x680 MM.	MATERIAL: TEAK	DRAWN BY : AEKCHAI	FINISH DATE : 13-02-07	AEK	SCALE : 1:1	P. 4
						BEGIN DATE : 15-09-06	AEK		