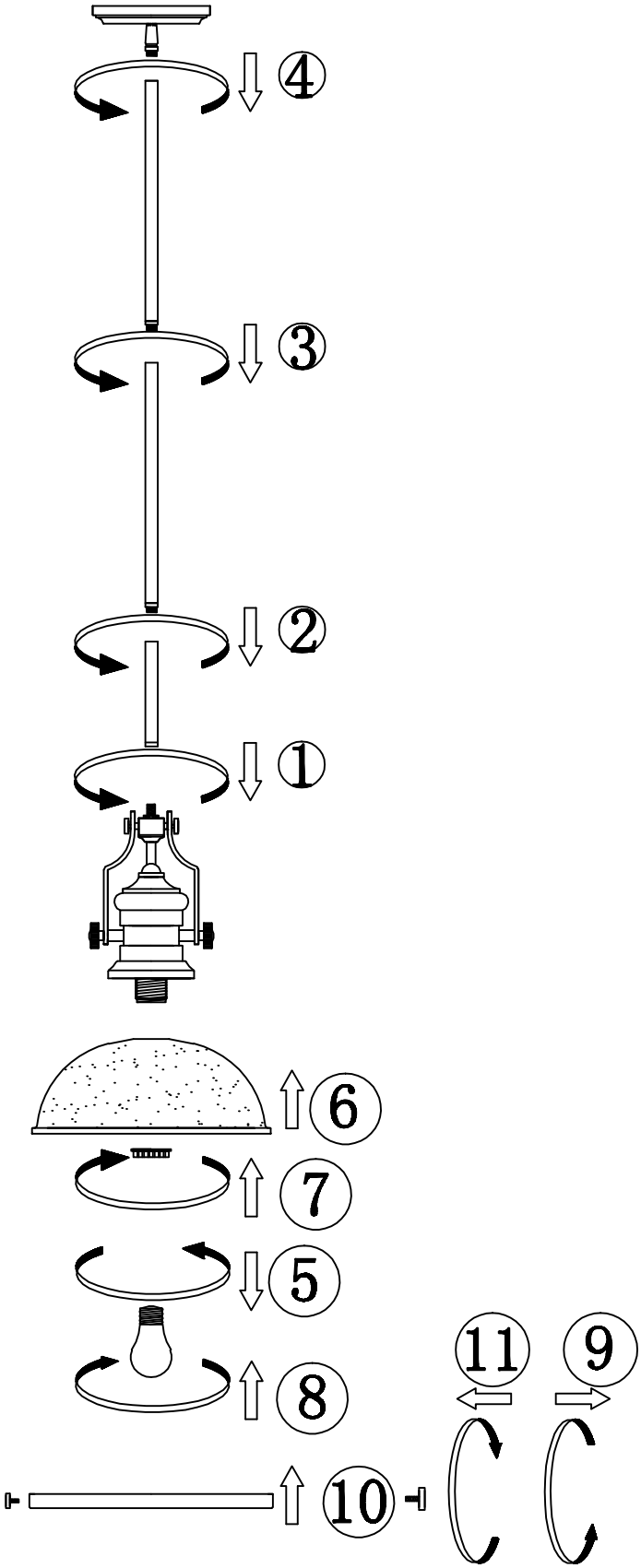
④
③
②
①
⑥
⑦
⑤
⑧
⑪
⑨
⑩