Caution:

1.Please read all instructions before assembly and check the carton for any parts that may have come loose during shipment. it is recommended to use two or more persons during the assembly process.
2.Please do not discard any packaging before you have checked all the parts and fittings are incuded. If for any reason this product needs to be retumed it must be retumed packed in its original packaging
3.Assemble this produet on a flat and clean surface to avoid scratching.
4.Please don't tighten the screws completely and go back later for a final tightening of all the screws after pieces are aligned with each other !

DCWSC100119701A
DCWSC100122701A

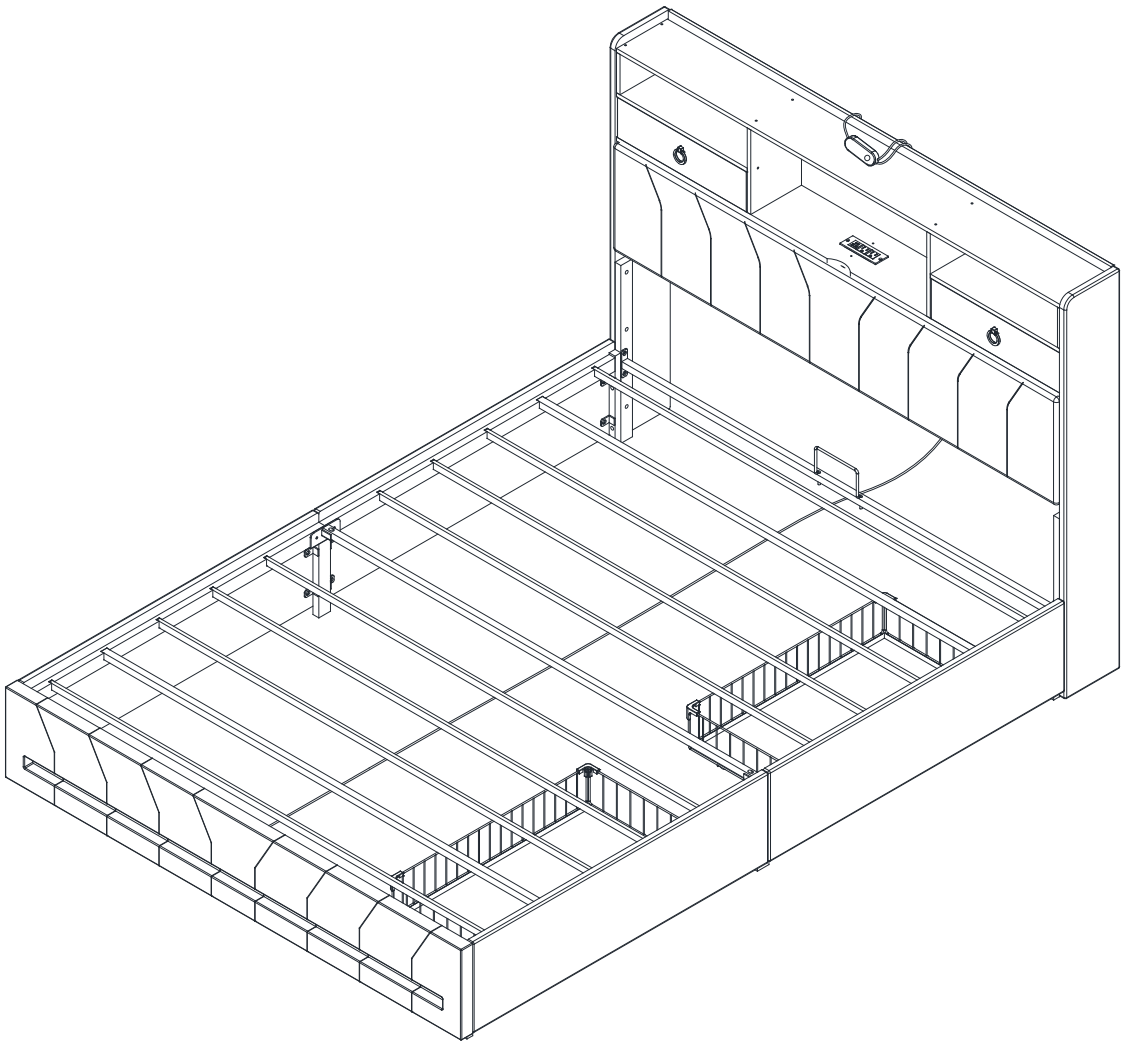

Package Contents

Plates and iron components	Assembly tool kit	Instruction manual

Precautions ⚠

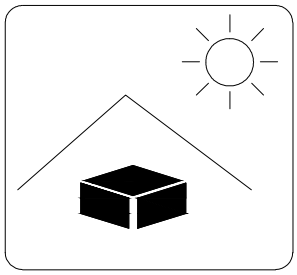

1.Avoid long-term direct sunlight exposure

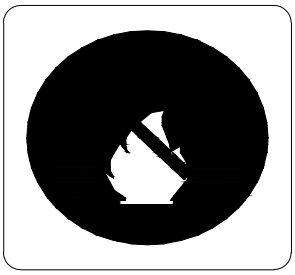

2.Stay away from fire

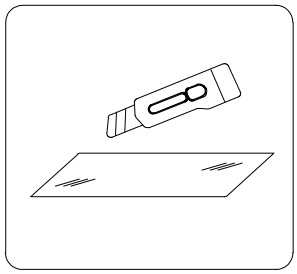

3.Keep away from sharp objects

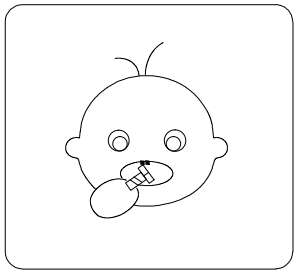

4.Keep infants/children away from assembly parts to avoid choking and suffocation.

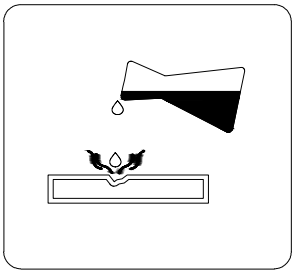

5.Keep away from corrosive substances

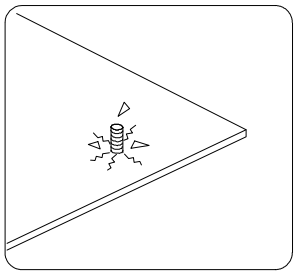

6.Please use the correct screws, otherwise the plate will be damaged.

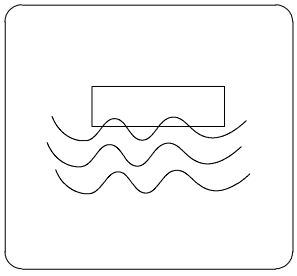

7.Prevent objects from being damaged by immersion in water

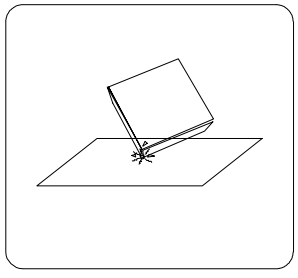

8.Prevent object collision and damage

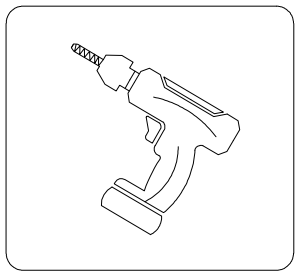

9.Use an electric screwdriver for installation, please be careful not to set the speed too high.

Problems You May Encounter

PART	PROBLEM	SOLUTION
Whole Product	Parts are missing, defective or having wrong parts in package.	You can contact us and we will get back to you within 24 hours
	Having issue(s) while reading the instruction or completing the assembly.	Feel free to contact us and we will get back to you within 24 hours.
	Encountering non-human caused damage during usage.	If the product is damaged due to non-human causes, please keep the product and send us photos of it. We will ascertain the cause of the product damage within 48 hours and provide you with a satisfactory solution.
Product Surface	Board Surface is broken, scratched or lack of some screw holes.	Feel free to contact us and we will get back to you within 24 hours.
	The screw holes on the wooden board and other wooden boards are not aligned.	1.Please tighten the screws on the board by 70 %, do not tighten completely. 2. Adjust the wooden board and board. Until the holes are arranged neatly, then tighten all screws
	Uneven countertop	Please loosen the fixing screws to 50% or 70%, align the components, and then tighten all screws.
Parts	Metal accessories are damaged, rusted, bent, and broken.	Feel free to contact us and we will get back to you within 24 hours.
	unstable after being assembled.	1.Check if the screws are tightened. 2.Read throughout the manual, check if there are any parts installed incorrectly or some parts are missed to be installed. 3.If the problem still can't be solved, please feel free to contact us.
	Encountering non-human caused damage during usage.	If the product is damaged due to non-human causes, please keep the product and send us photos of it. We will ascertain the cause of the product damage within 48 hours and provide you with a satisfactory solution.

DEAR CUSTOMER,

Caution:

1.Please read all instructions before assembly and check the carton for any parts that may have come loose during shipment. It is recommended to use two or more persons during the assembly process.

2.Please do not discard any packaging before you have checked all the parts and fittings are included.

3.Assemble this product on a flat and clean surface to avoid scratching.

4.Please don't tighten the screws completely and go back later for a final tightening of all the screws after pieces are aligned with each other !



Mobile phone control steps:

1. Connect LED Lamp and RF RGB Controller.
2. Plug in the Adaptor Power supply.
3. Scan the RF RGB Controller QR code on the controller and download the software Lotus Lantern.
4. Turn on the Bluetooth function of the mobile phone and search for Bluetooth pairing "Trinoes".
5. Open the "Lotus Lantern" APP and switch colors change.
   Click the music switch to realize the skip mode of different LED lights.
   Press the timing switch to realize the automatic light off function,etc.

Parts List

Pls make sure all the accesories are complete!

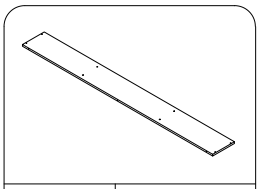	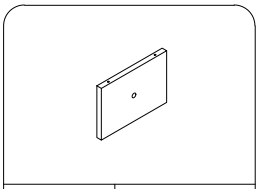	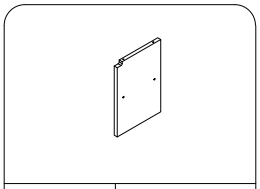	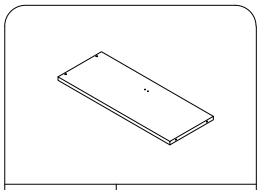	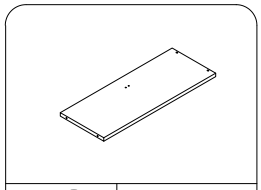
① 1PC	② 2PCS	③ 2PCS	④ 1PC	⑤ 1PC
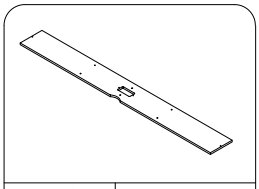	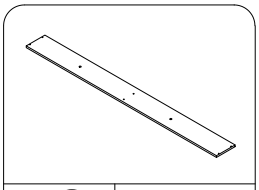	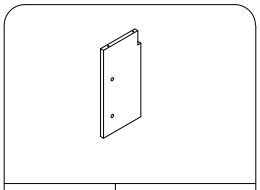	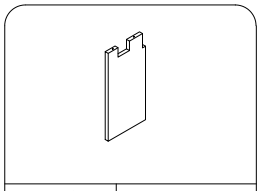	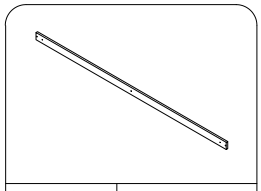
⑥ 1PC	⑦ 1PC	⑧ 2PCS	⑨ 1PC	⑩ 1PC
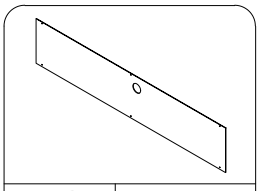	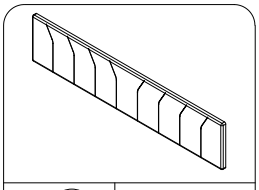	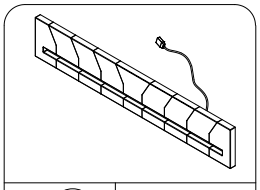	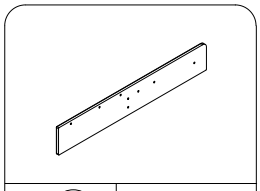	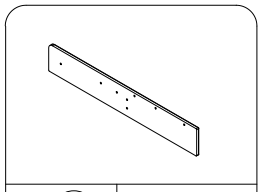
⑪ 1PC	⑫ 1PC	⑬ 1PC	⑭ 1PC	⑮ 1PC
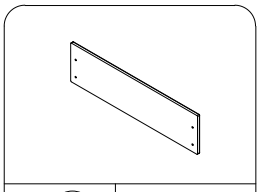	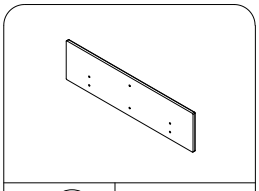	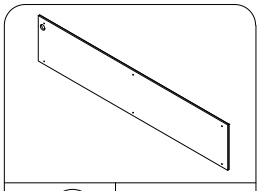	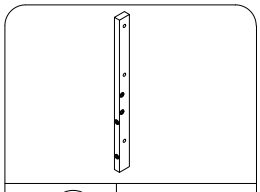	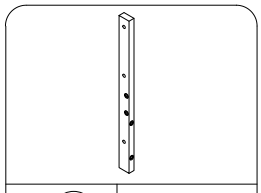
⑯ 2PCS	⑰ 2PCS	⑱ 1PC	⑲ 1PC	⑳ 1PC
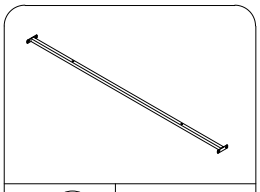	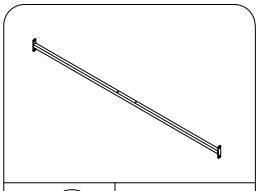	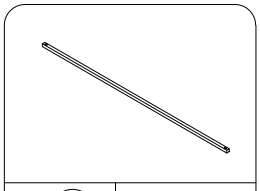	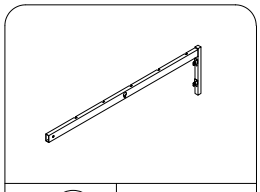	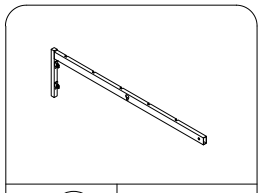
㉑ 1PC	㉒ 1PC	㉓ 1PC	㉔ 2PCS	㉕ 2PCS
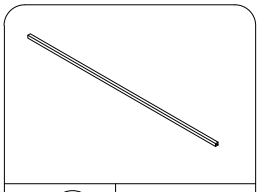	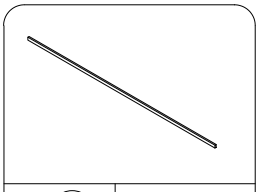	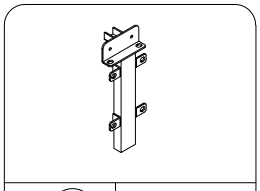	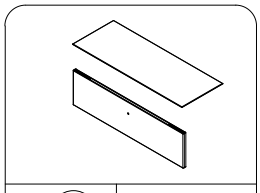	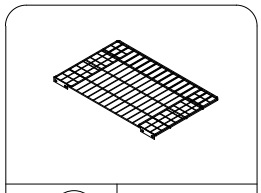
㉖ 2PCS	㉗ 8PCS	㉘ 2PCS	㉛ 2PCS	㉜ 2PCS
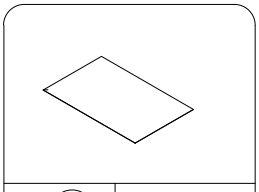	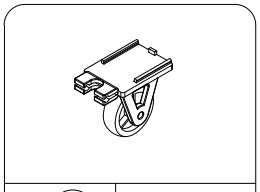	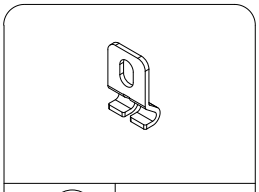	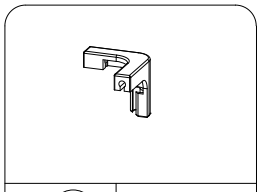	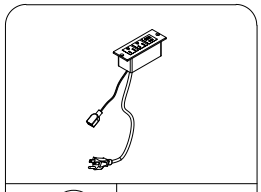
㉝ 2PCS	㉞ 8PCS	㉟ 2PCS	㊱ 4PCS	㊲ 1PC

Hardware List

Pls make sure all the accesories are complete!

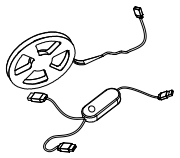	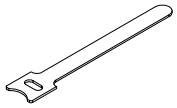		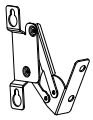	
38 1PC	39 4PCS	40 1PC	41 1PC	42 1PC


43 1PC

			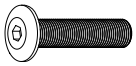	
M6*30mm	M8*15mm	M8*20mm	M8*30mm	M8*35mm
A 4PCS	B 18PCS	C 20PCS	D 12PCS	E 14PCS

	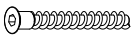			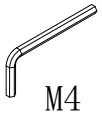
M4*10mm	M5*40mm	M4*8mm	M3.5*12mm	M4
G 2PCS	H 44PCS	I 2PCS	J 6PCS	K 1PC

				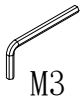
M5				M3
L 2PCS	M 1PC	N 2PCS	O 2PCS	P 1PC


M8*20mm
Q 2PCS

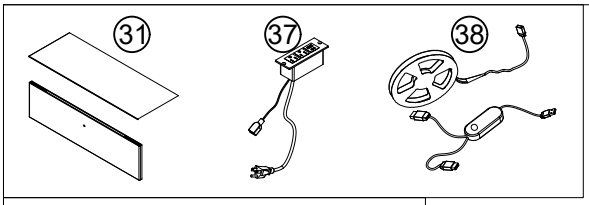

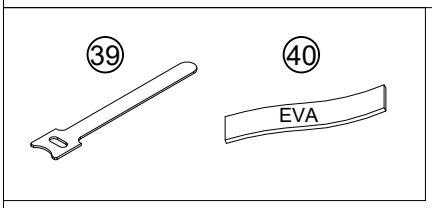

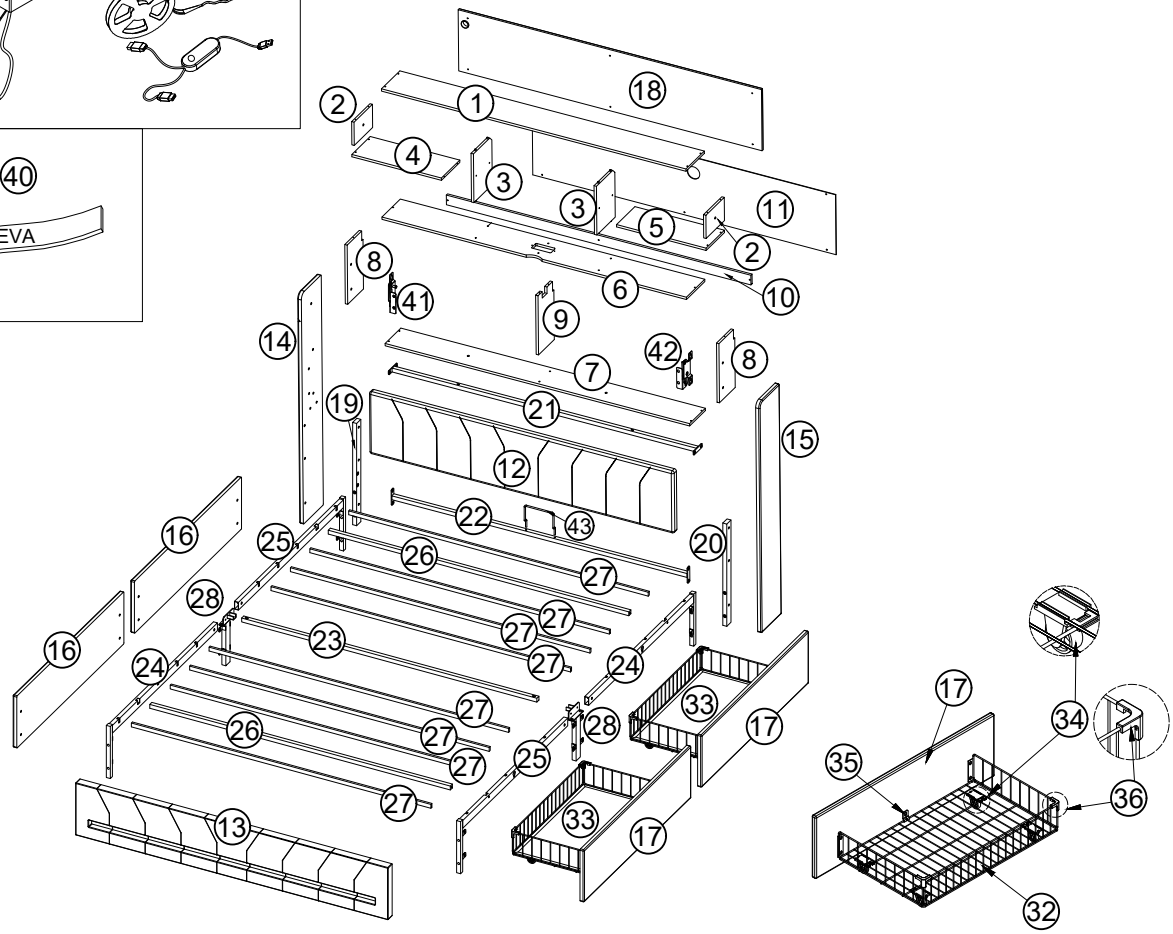

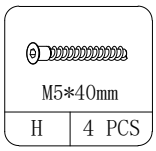

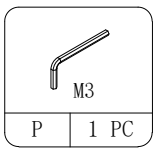

1

Please pay attention to the installation direction of the parts

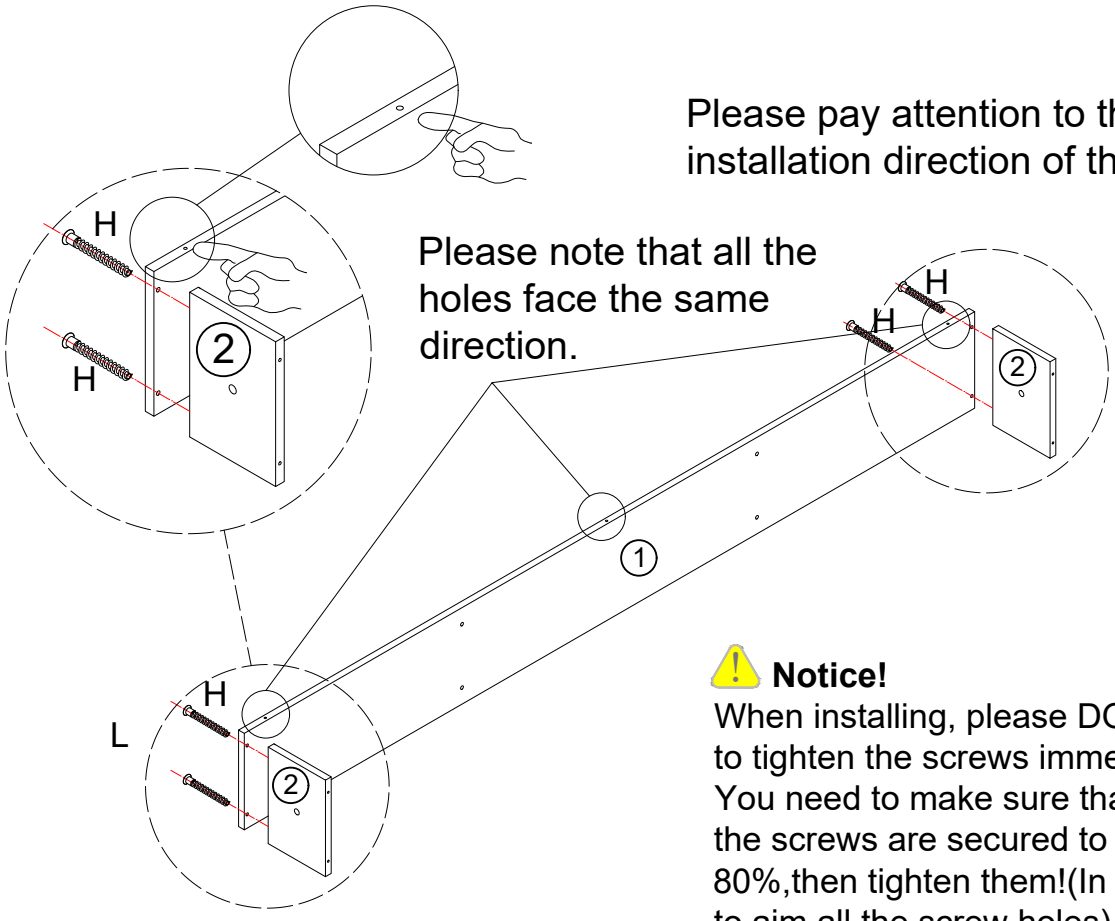

Notice!

When installing, please DO NOT to tighten the screws immediately! You need to make sure that all the screws are secured to 80%,then tighten them!(In order to aim all the screw holes)

2

Pay attention to the hole positions on the parts.

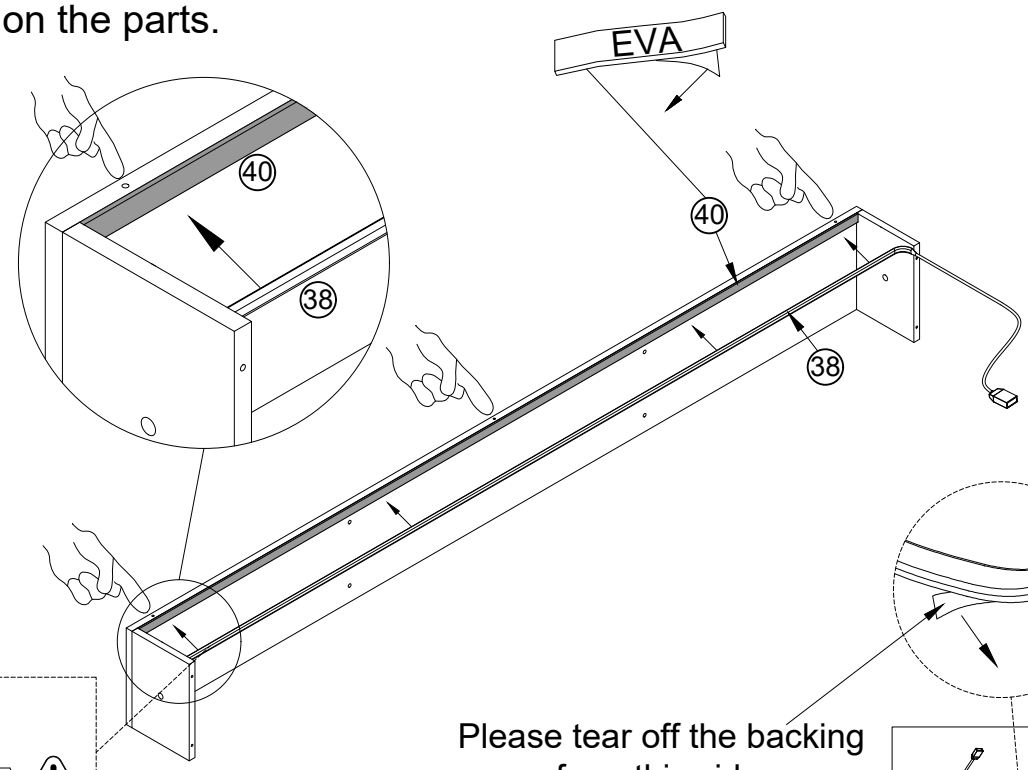

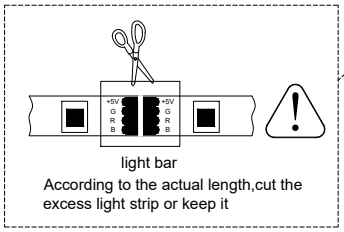

light bar
According to the actual length,cut the excess light strip or keep it

Please tear off the backing paper from this side.

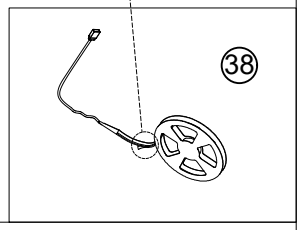

3

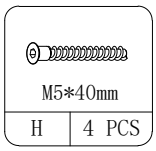

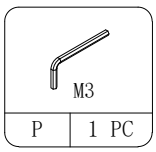

Please pay attention to the installation direction of the parts

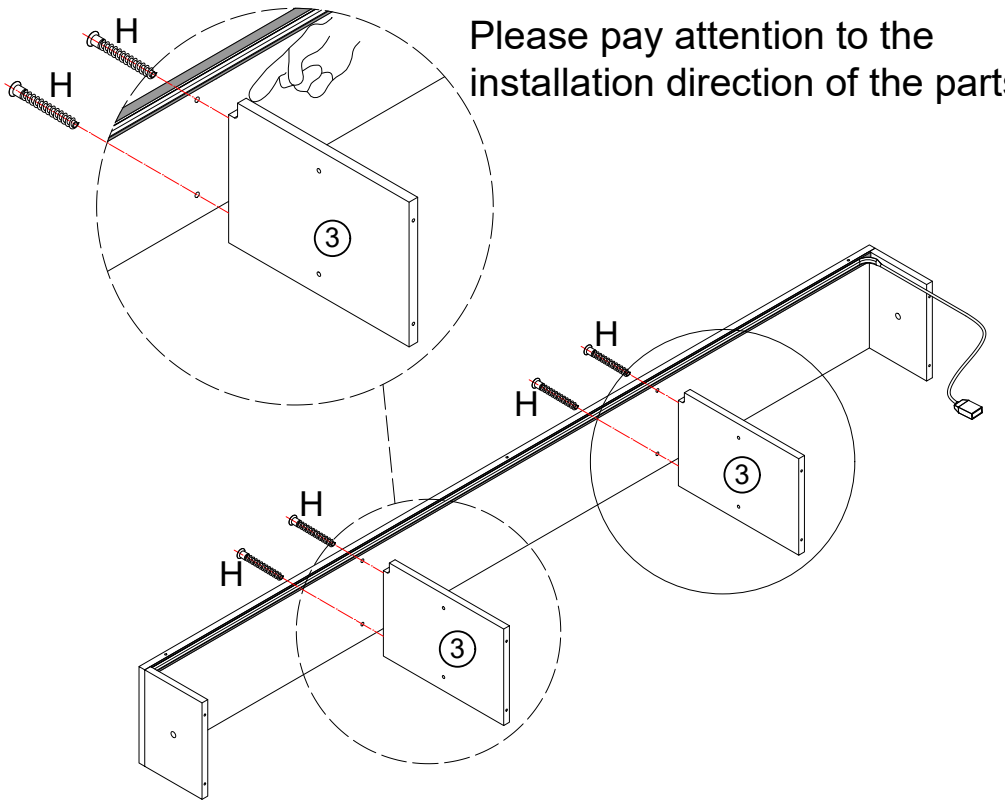

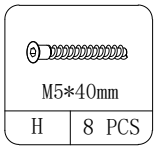

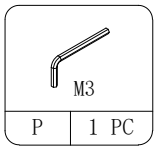

4

Please pay attention to the installation direction of the parts

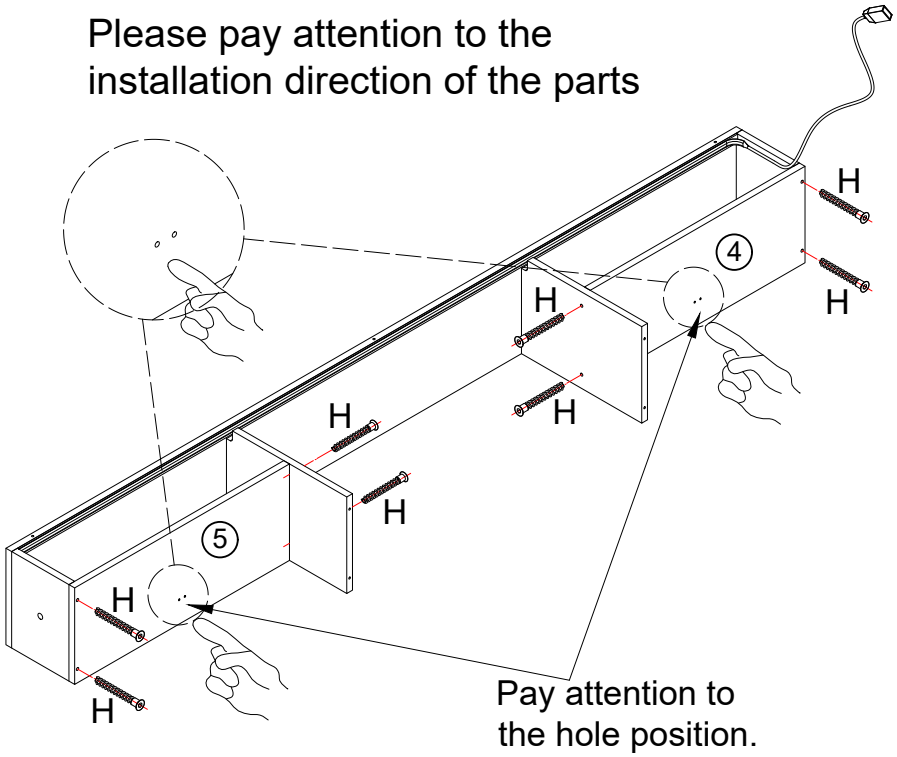

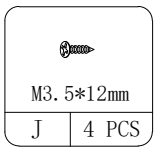

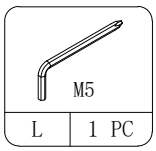

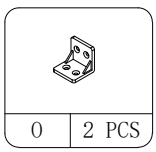

5

Please pay attention to the installation direction of the parts

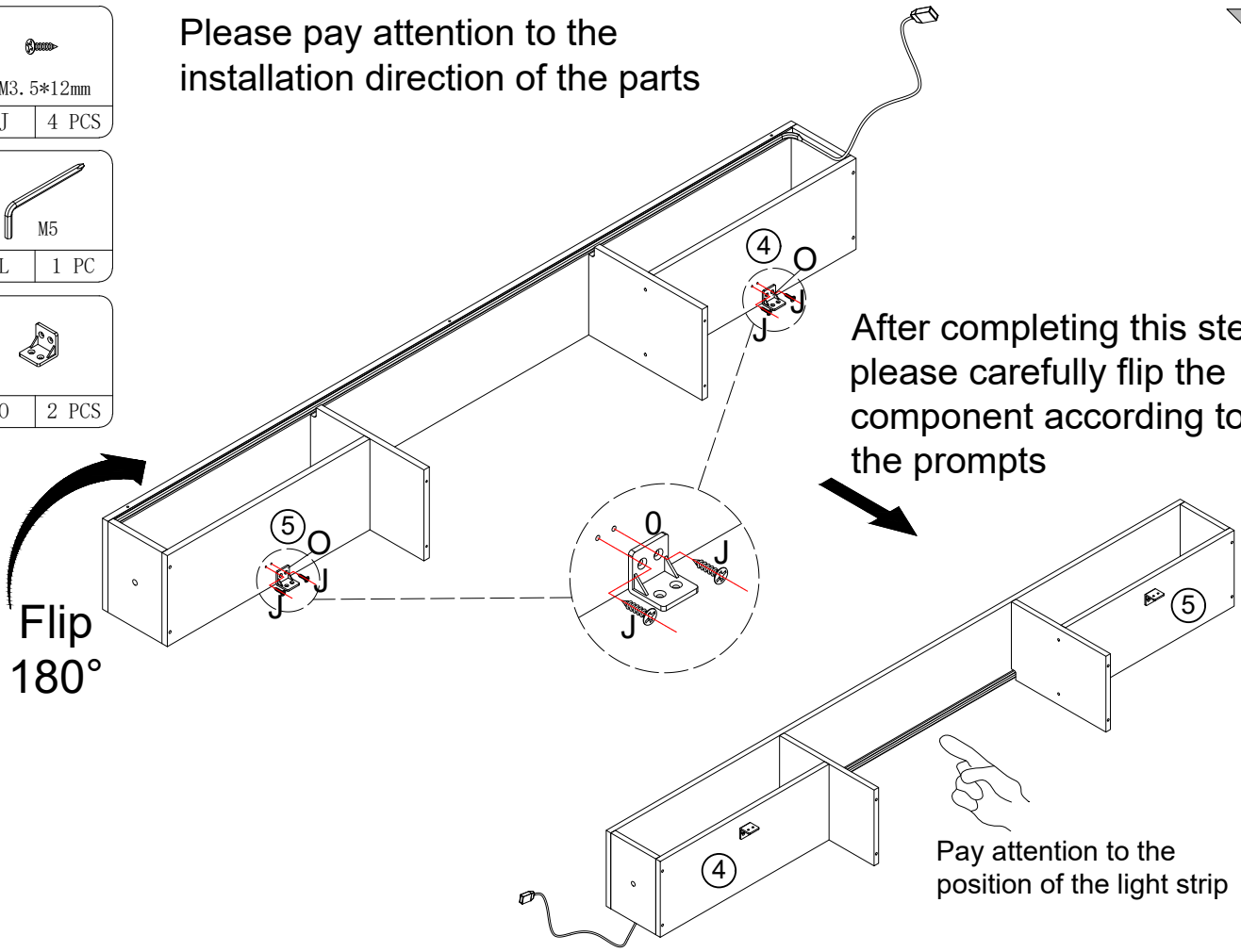

After completing this step, please carefully flip the component according to the prompts

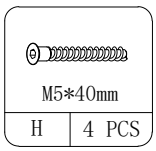

H	4 PCS

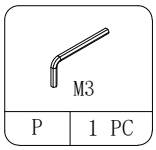

P	1 PC

Please pay attention to the installation direction of the parts

6

Please note that all the holes face the same direction.

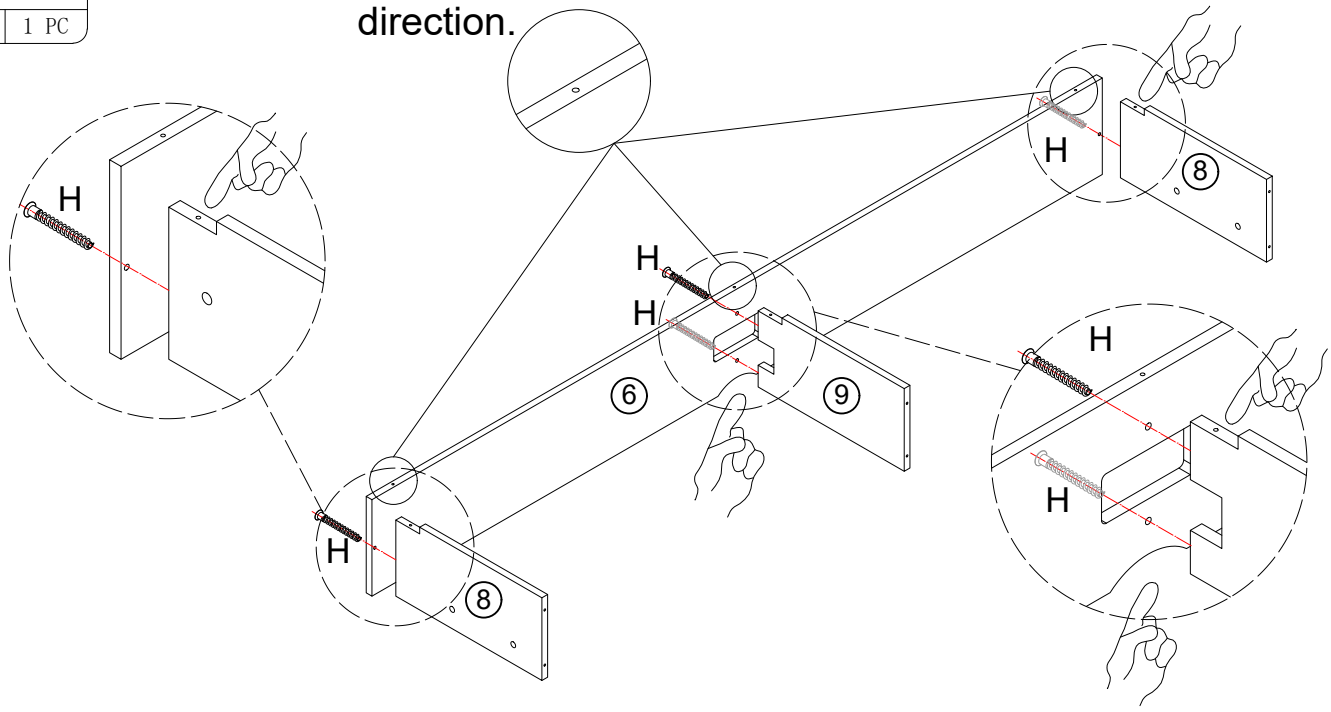

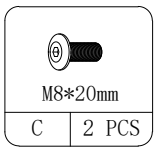

C	2 PCS

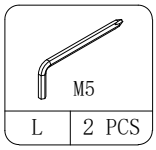

L	2 PCS

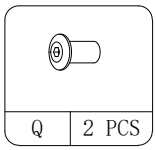

Q	2 PCS

7

Please note that all the holes face the same direction.

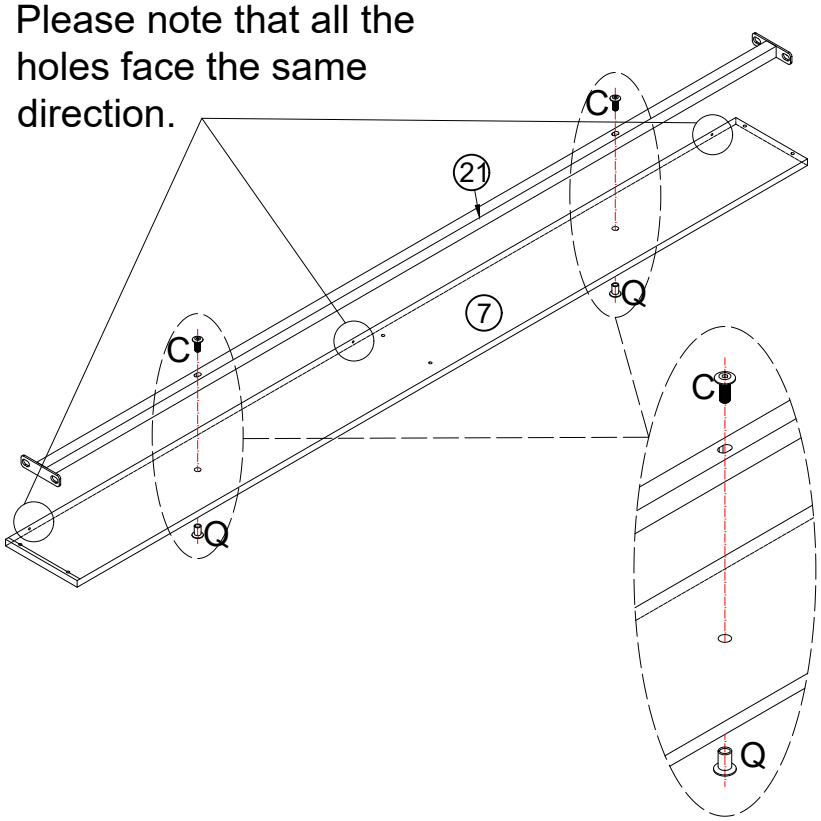

8

M5*40mm | H | 6 PCS

M3 | P | 1 PC

Please pay attention to the installation direction of the parts

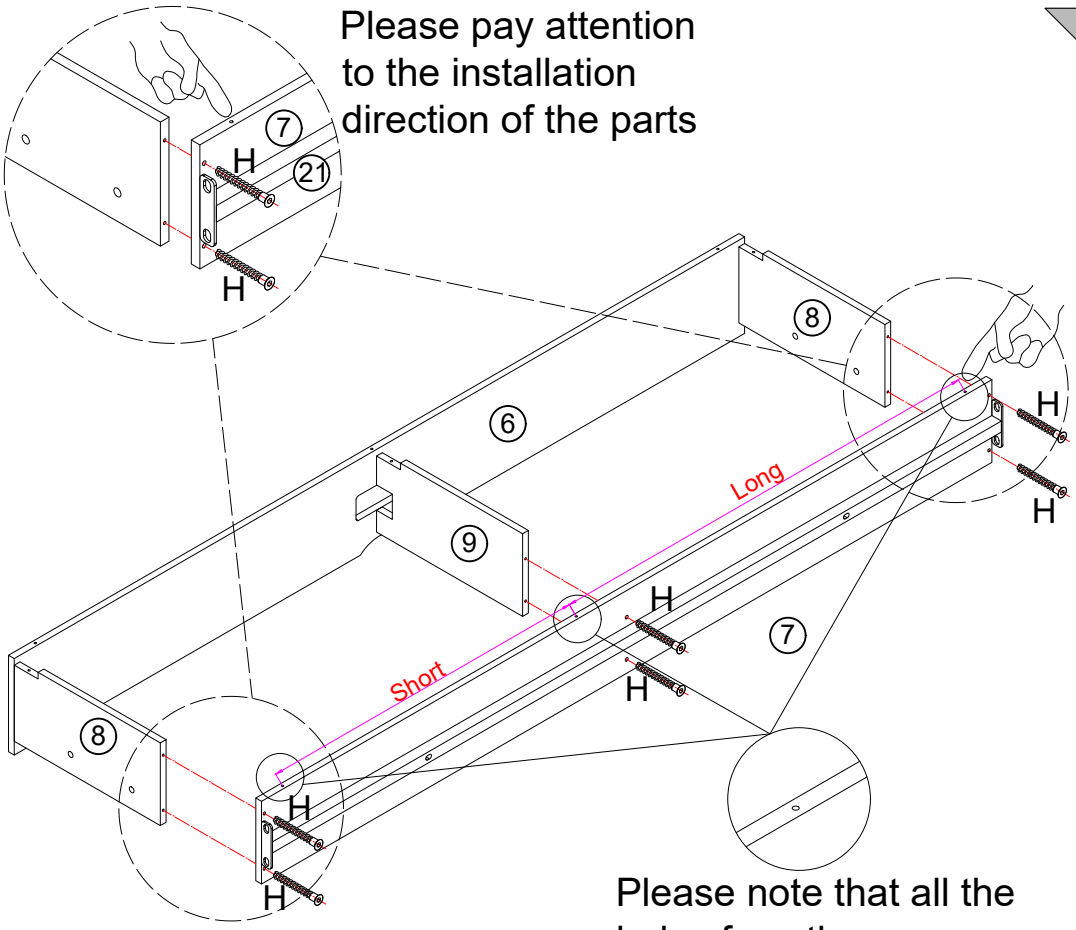

Please note that all the holes face the same direction.

9

M5*40mm | H | 2 PCS

M3 | P | 1 PC

Please note that all the holes face the same direction.

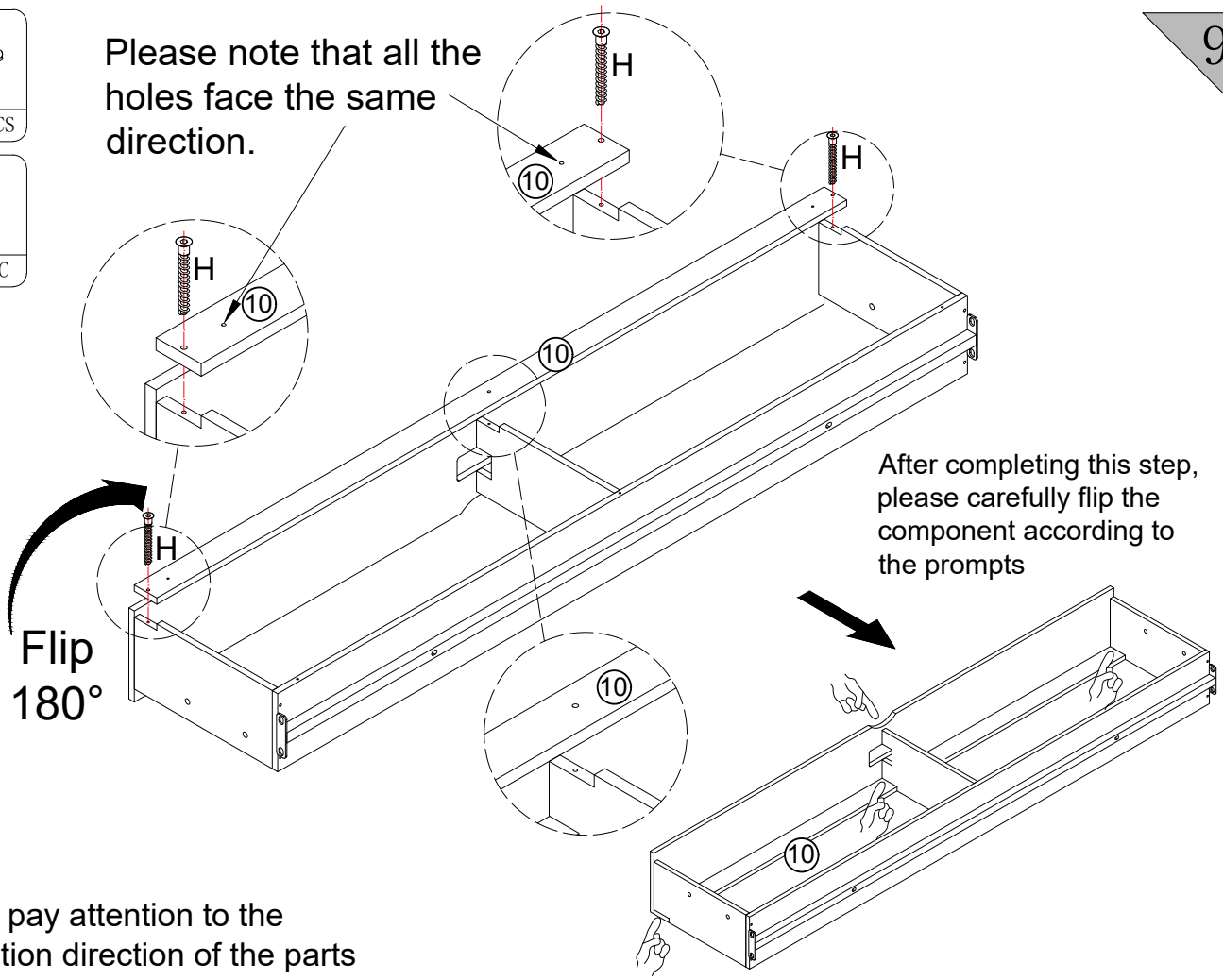

After completing this step, please carefully flip the component according to the prompts

Please pay attention to the installation direction of the parts

10

M5*40mm | H | 4 PCS

M3 | P | 1 PC

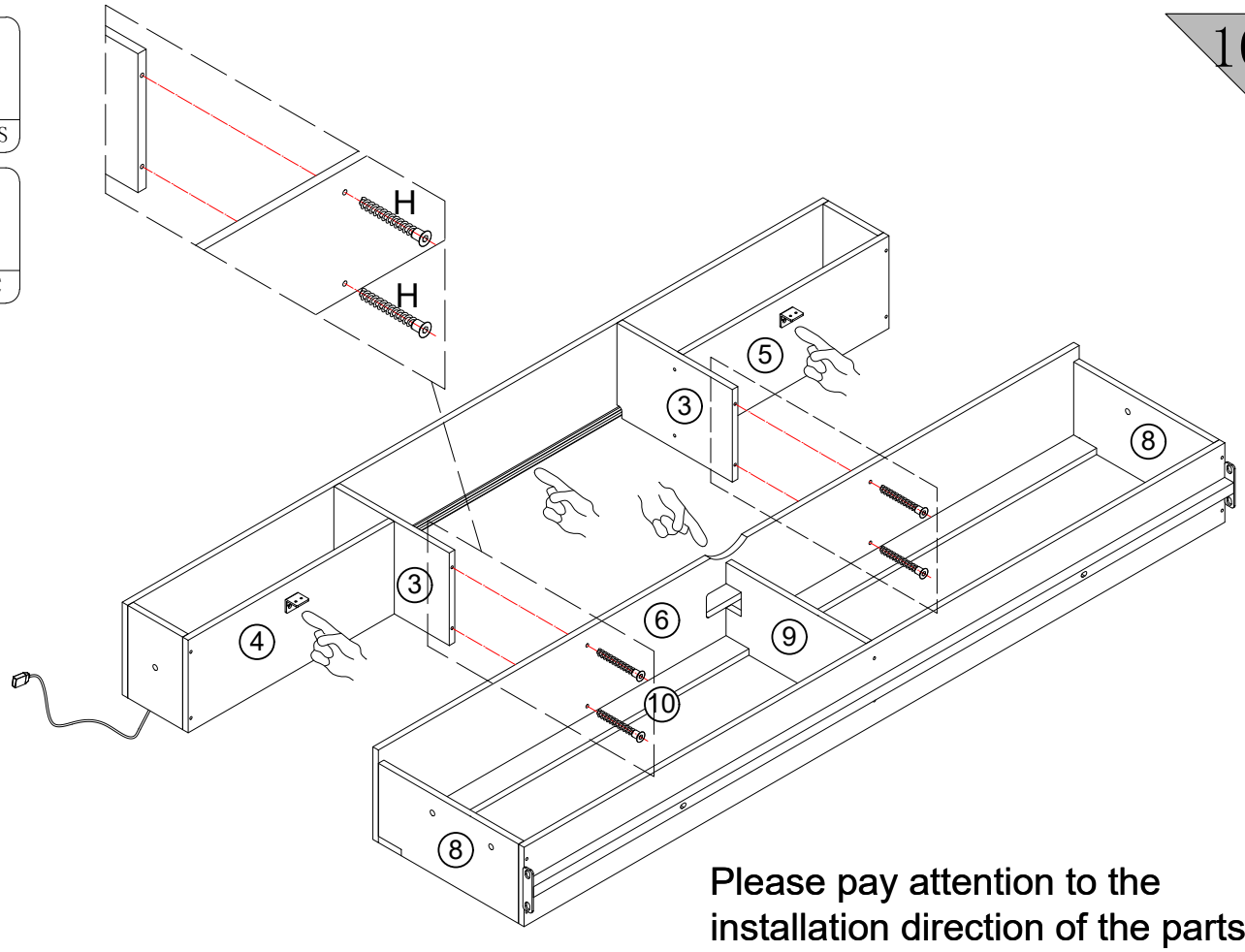

Please pay attention to the installation direction of the parts

11

M8*35mm | E | 6 PCS

M5 | L | 1 PC

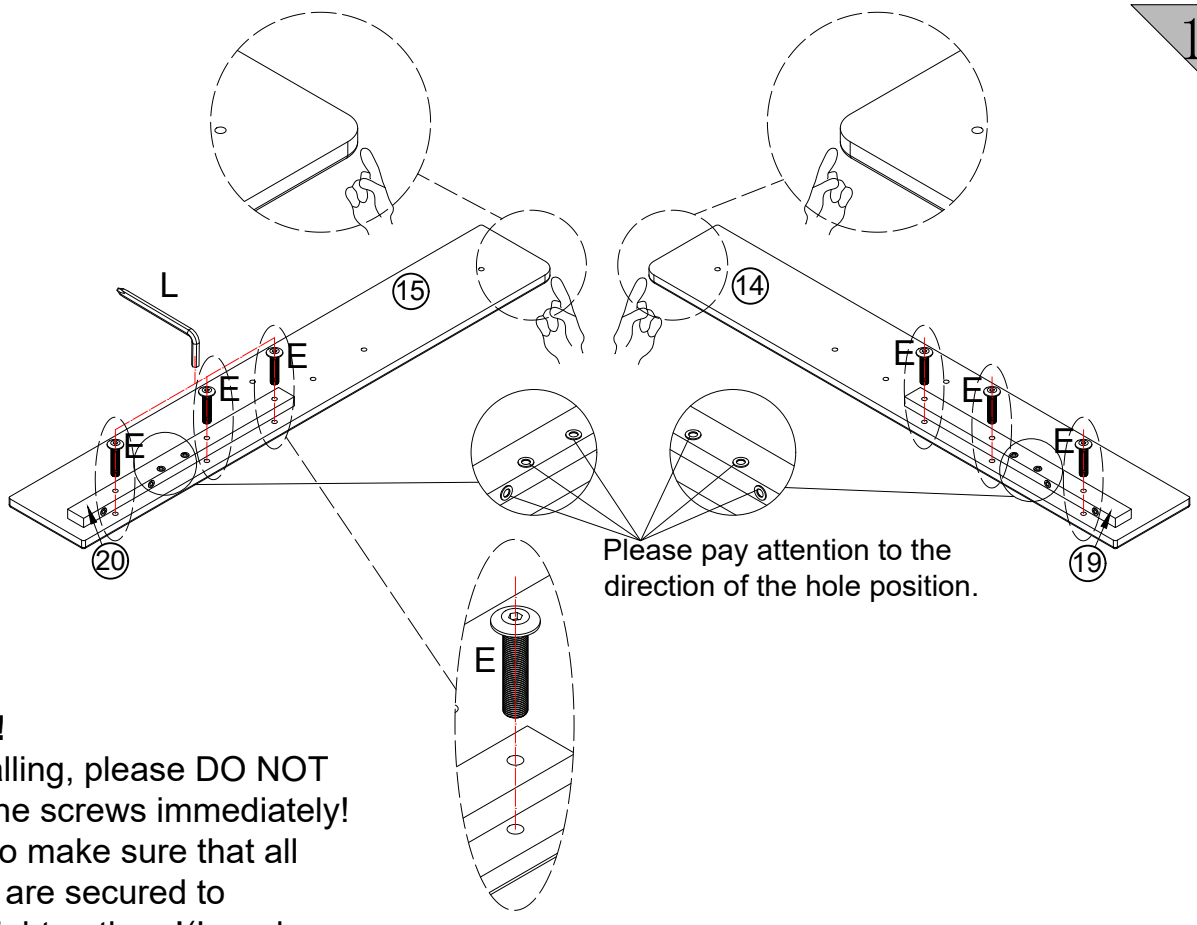

Please pay attention to the direction of the hole position.

Notice!

When installing, please DO NOT to tighten the screws immediately! You need to make sure that all the screws are secured to 50%,then tighten them!(In order to aim all the screw holes)

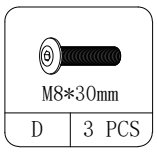

D	3 PCS

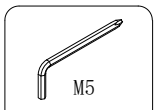

L	1 PC

Please pay attention to the installation direction of the parts

12

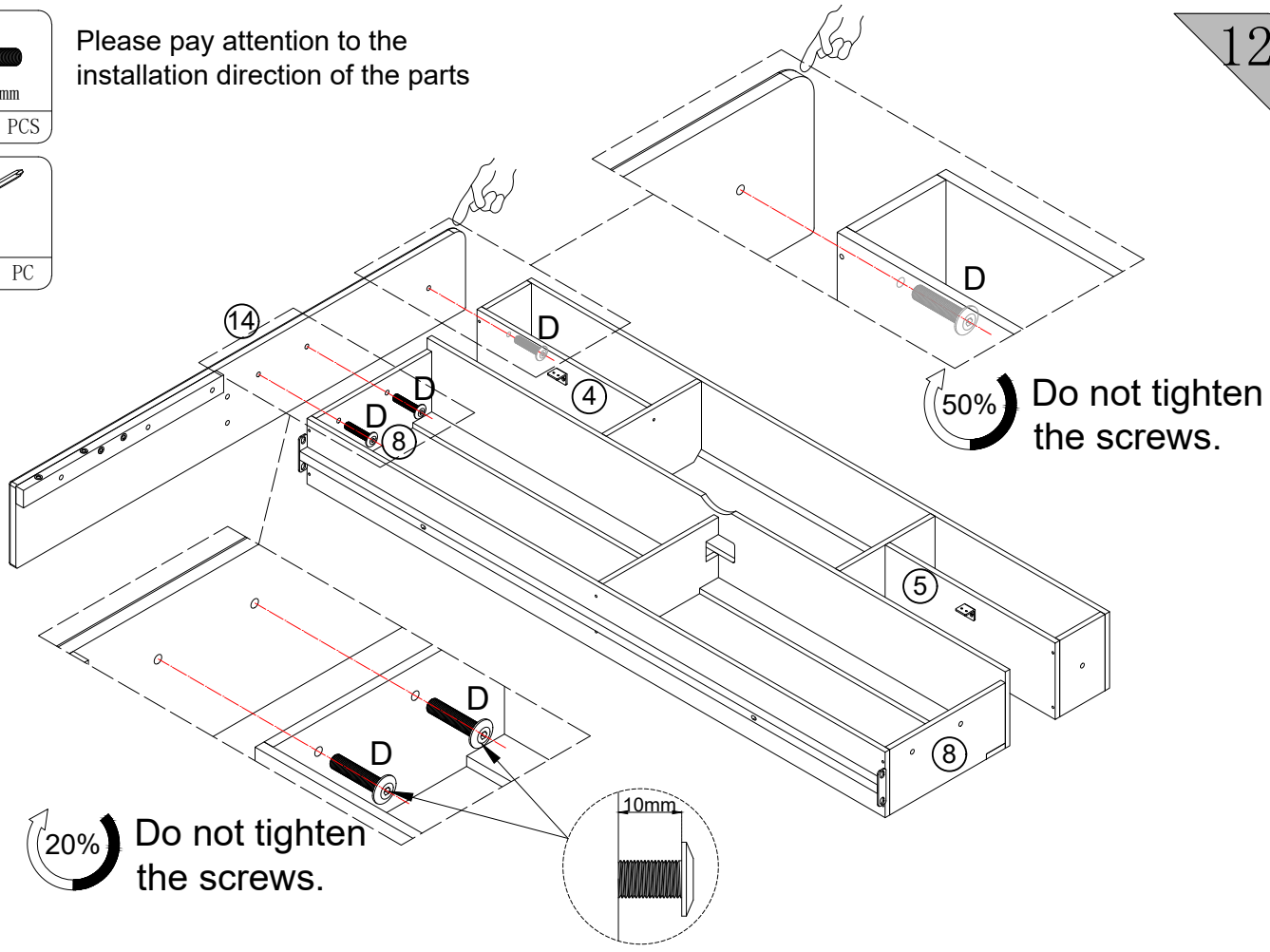

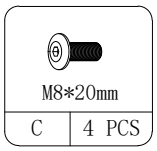

C	4 PCS

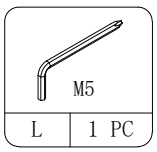

L	1 PC

13

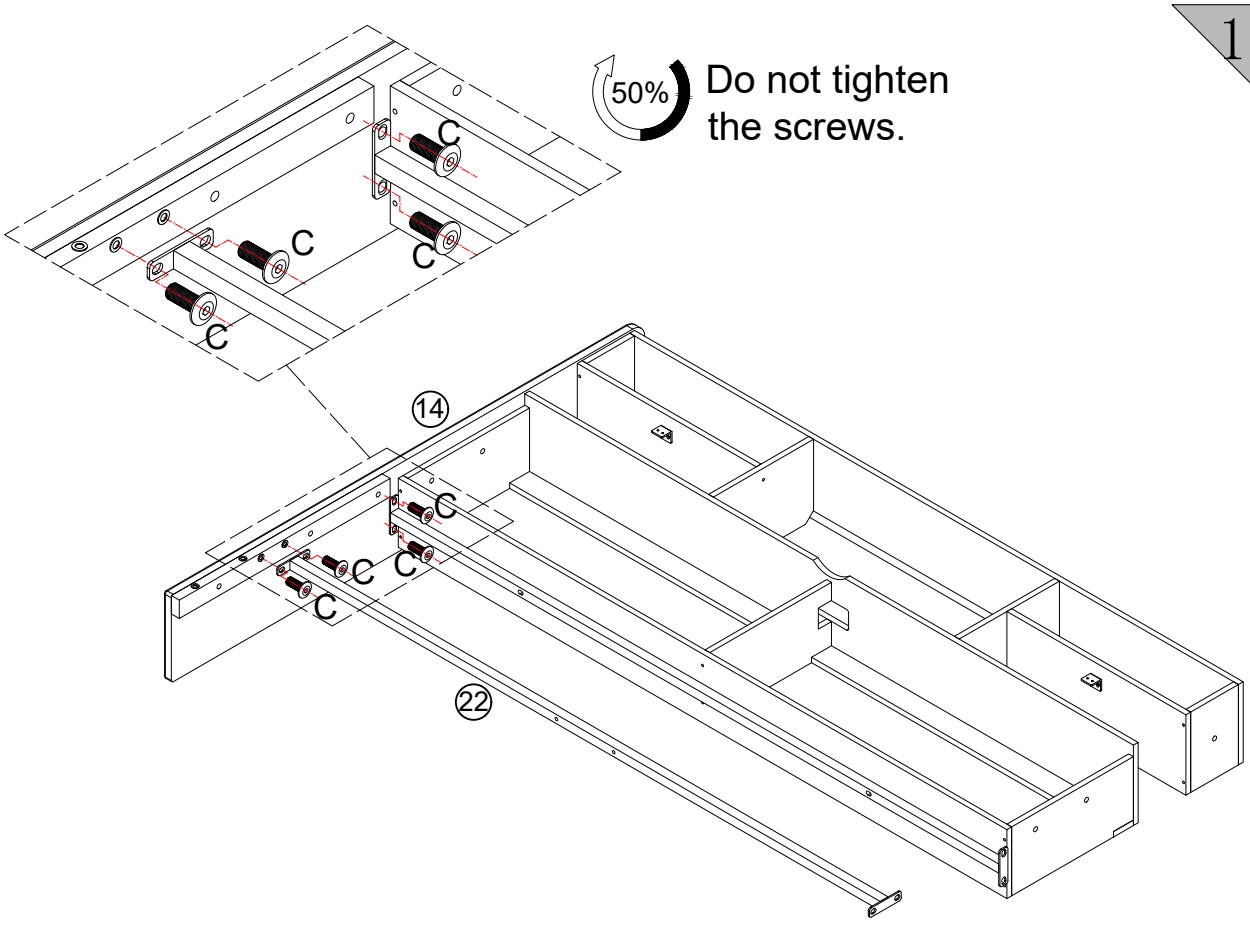

Please pay attention to the installation direction of the parts

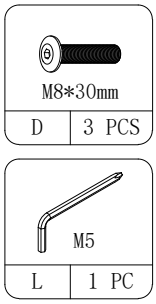



Do not tighten the screws.

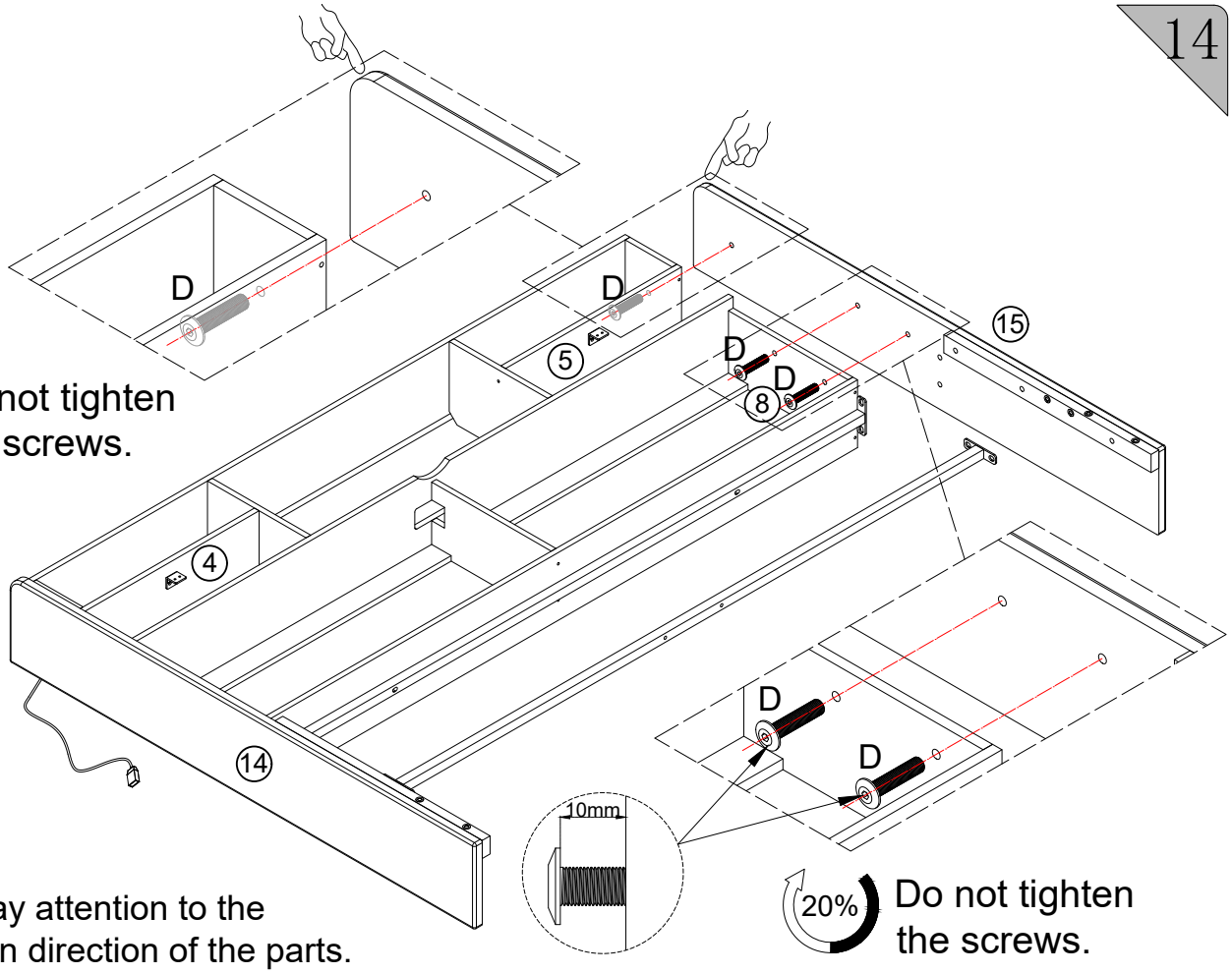

Do not tighten the screws.

Please pay attention to the installation direction of the parts.

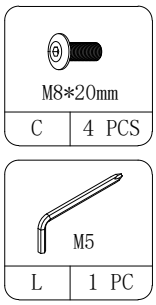

Do not tighten the screws.

Please pay attention to the installation direction of the parts

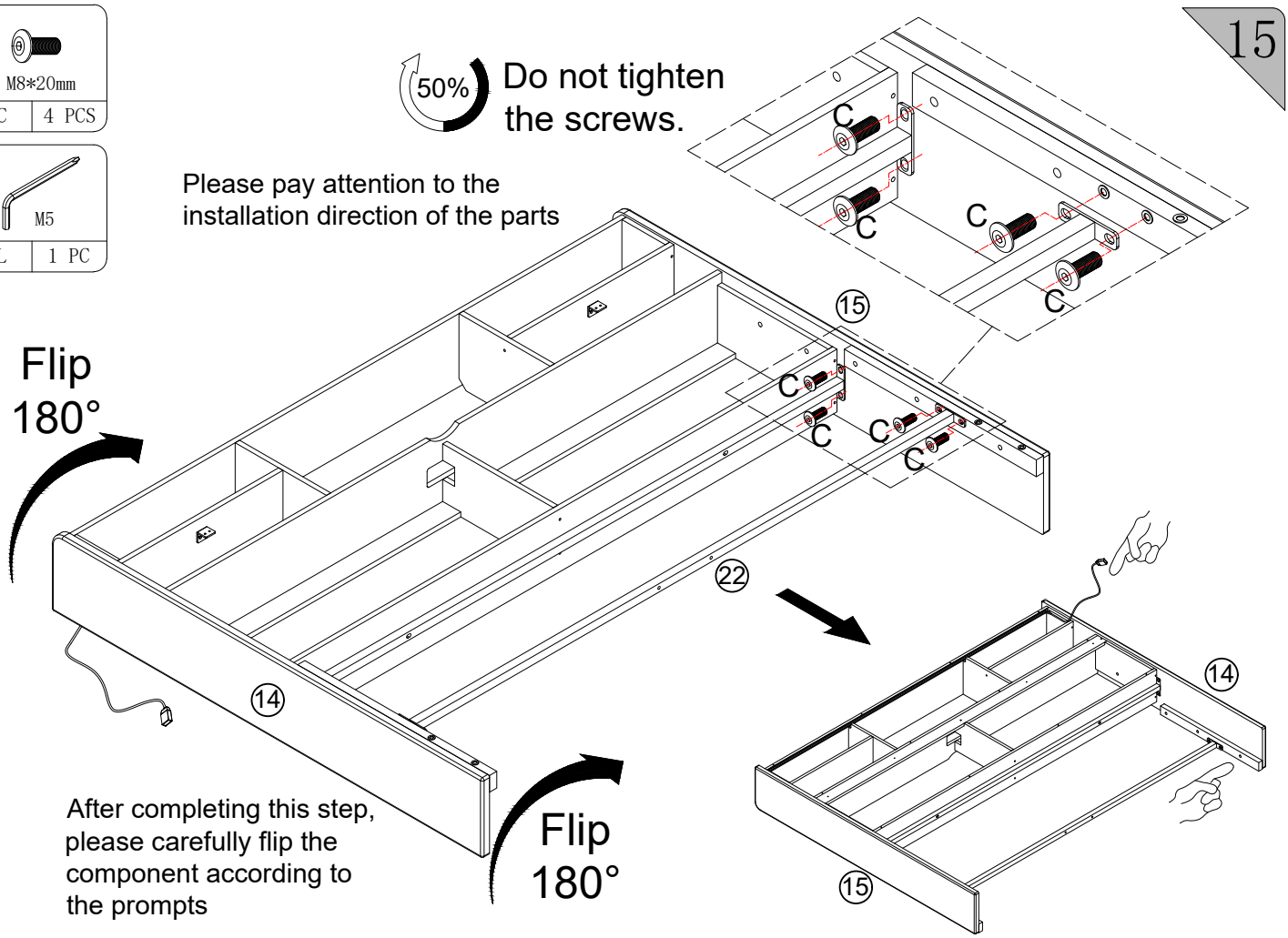

After completing this step, please carefully flip the component according to the prompts

16

M5*40mm	
H	6 PCS

M3	
P	1 PC

M	1 PC

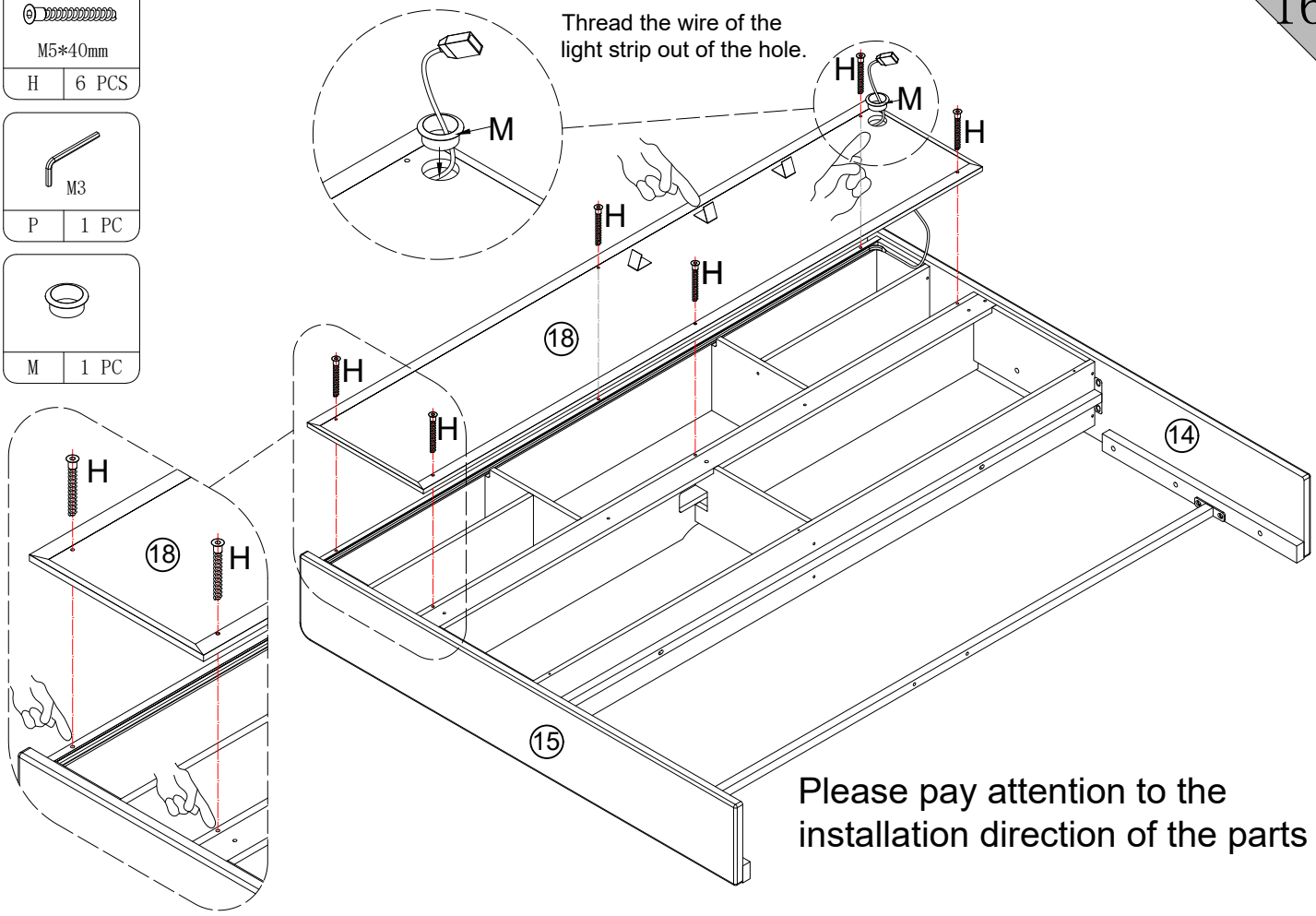

Please pay attention to the installation direction of the parts

17

M4*10mm	
G	2 PCS

M3	
P	1 PC

M5*40mm	
H	4 PCS

M5	
L	1 PC

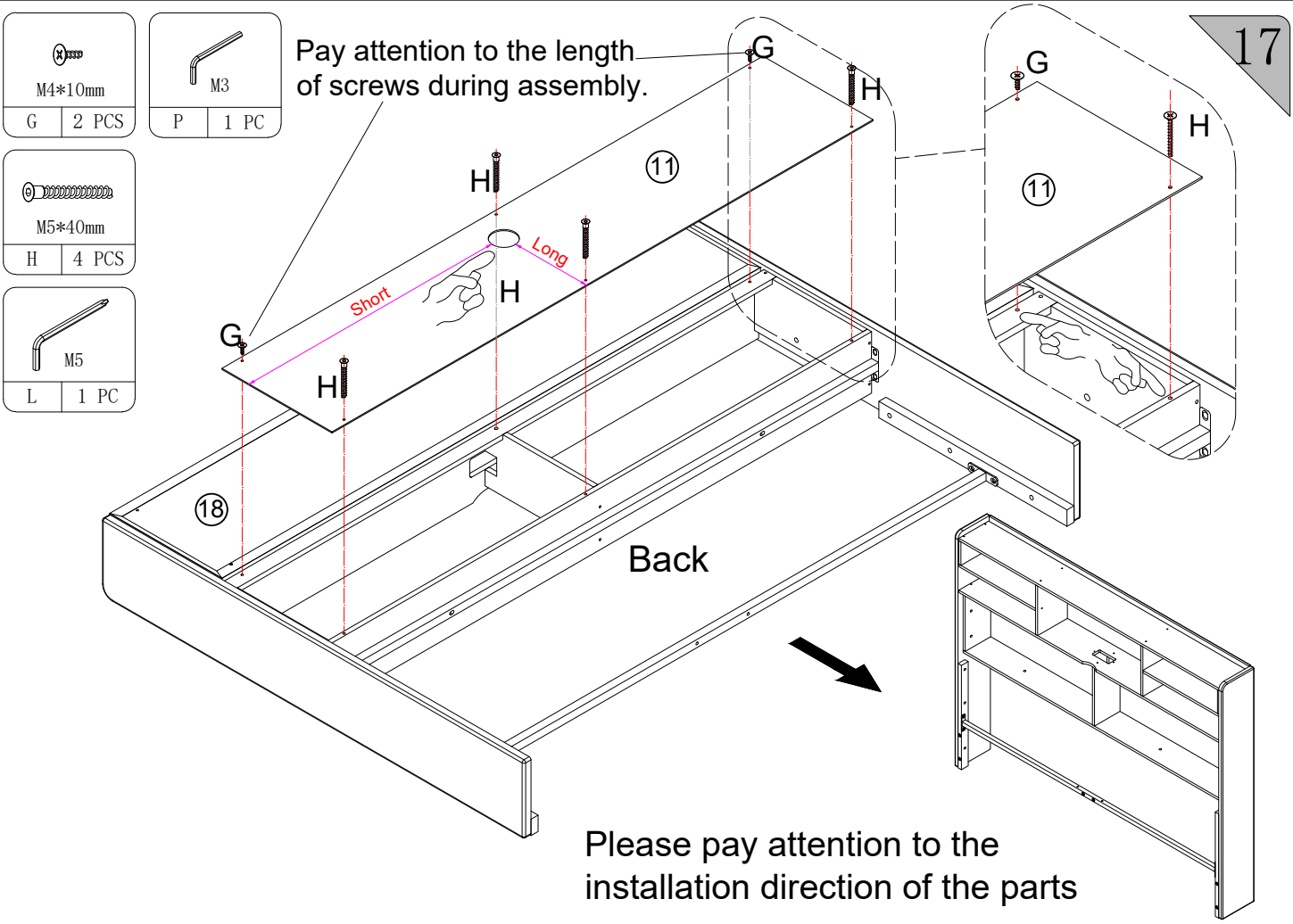

Please pay attention to the installation direction of the parts

18

M8*20mm | C | 4 PCS

M5 | L | 1 PC

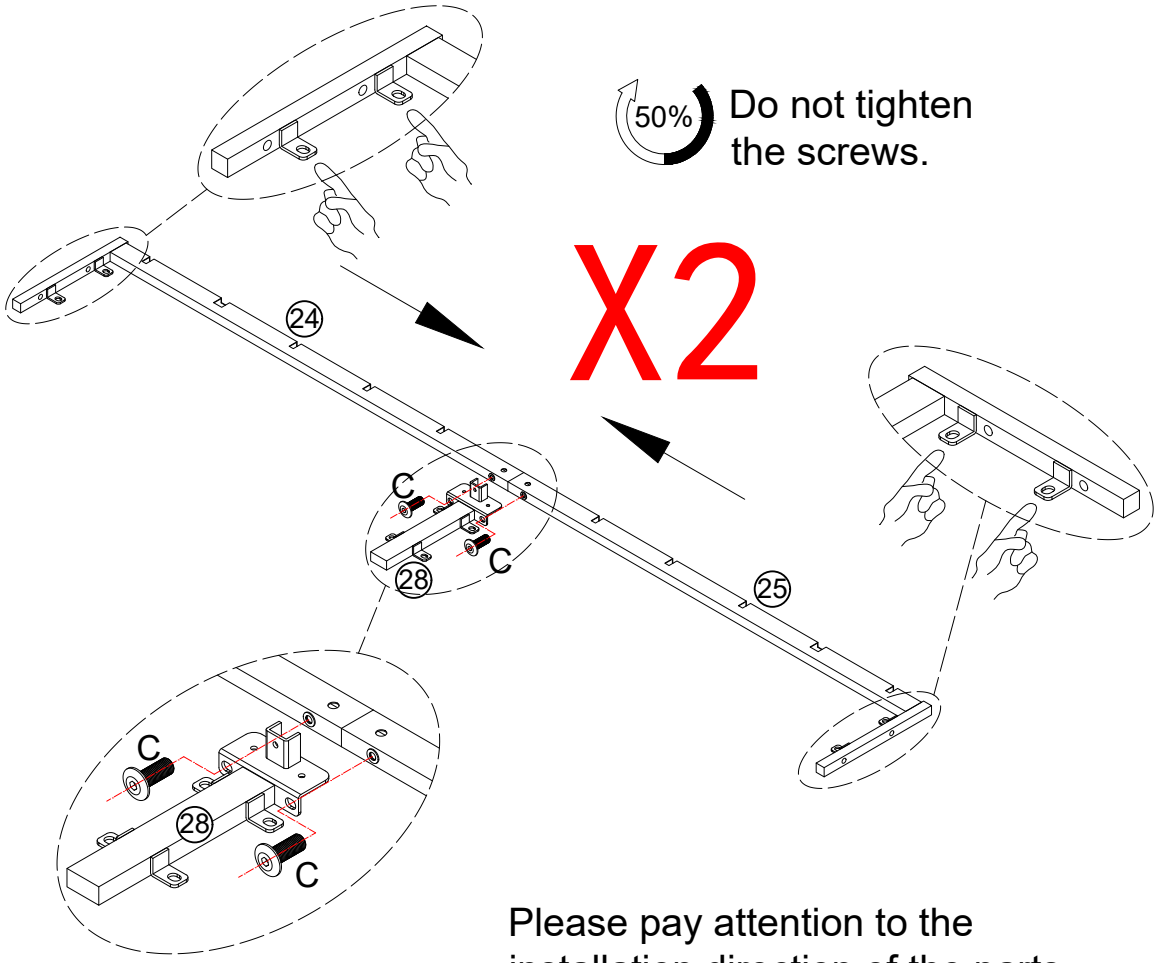

Please pay attention to the installation direction of the parts

19

M8*30mm | D | 4 PCS

M8*35mm | E | 4 PCS

M5 | L | 1 PC

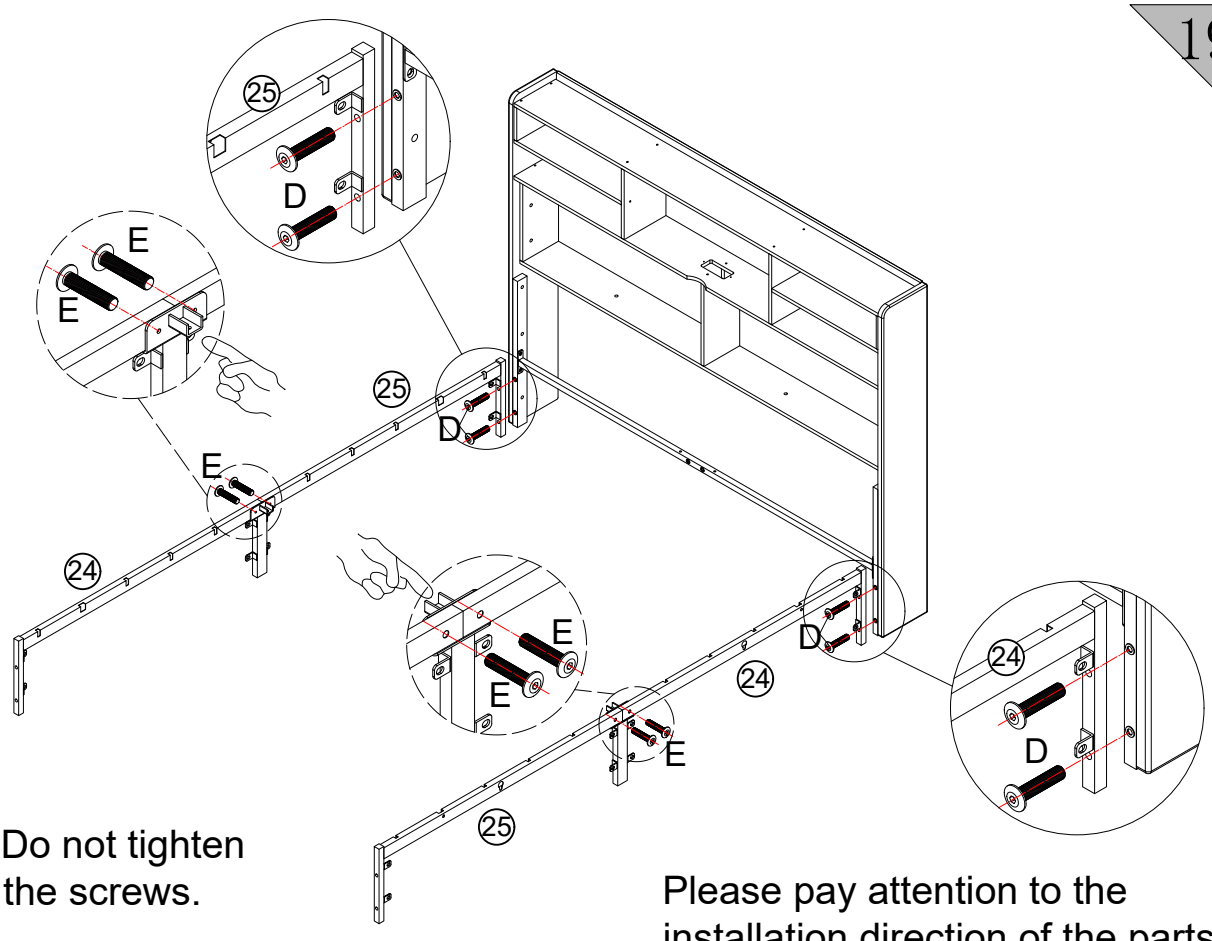

Please pay attention to the installation direction of the parts

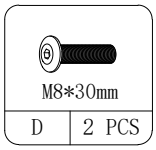

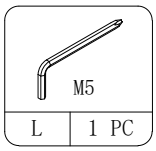

20

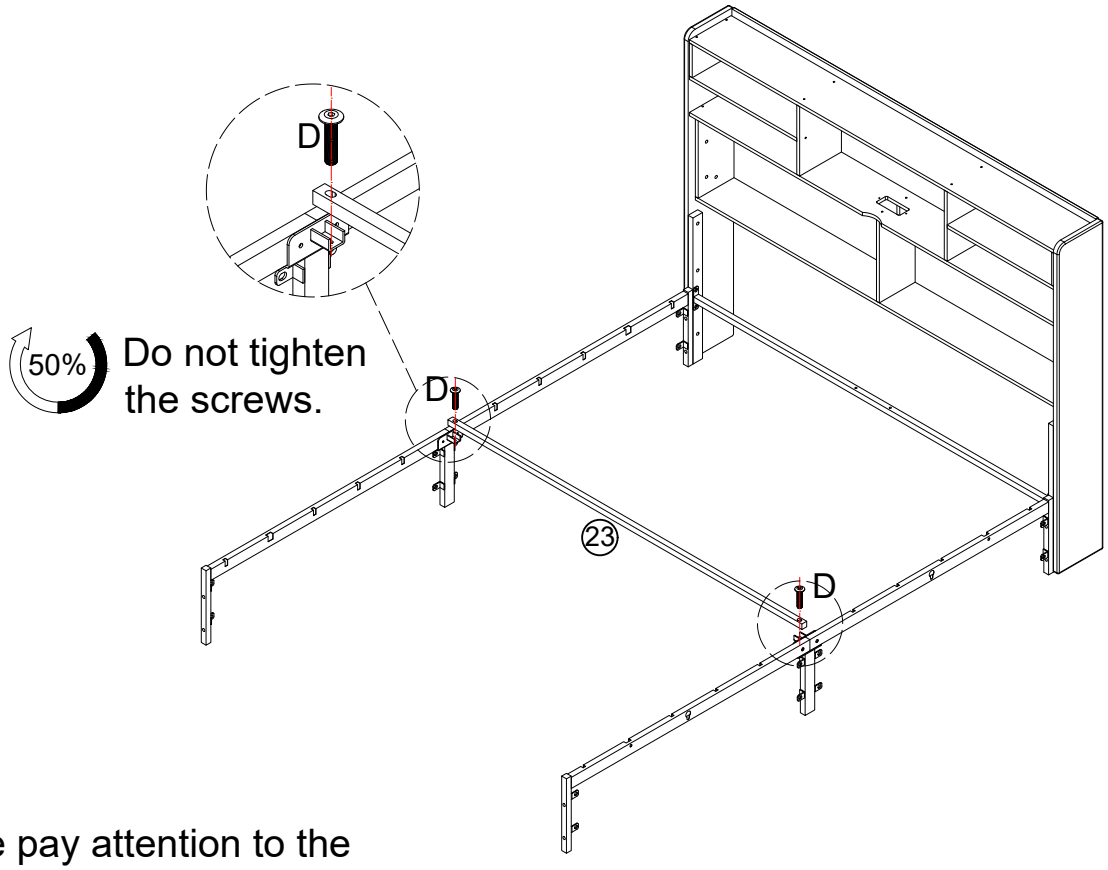

Do not tighten the screws.

Please pay attention to the installation direction of the parts

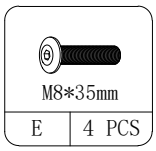

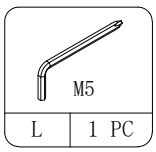

21

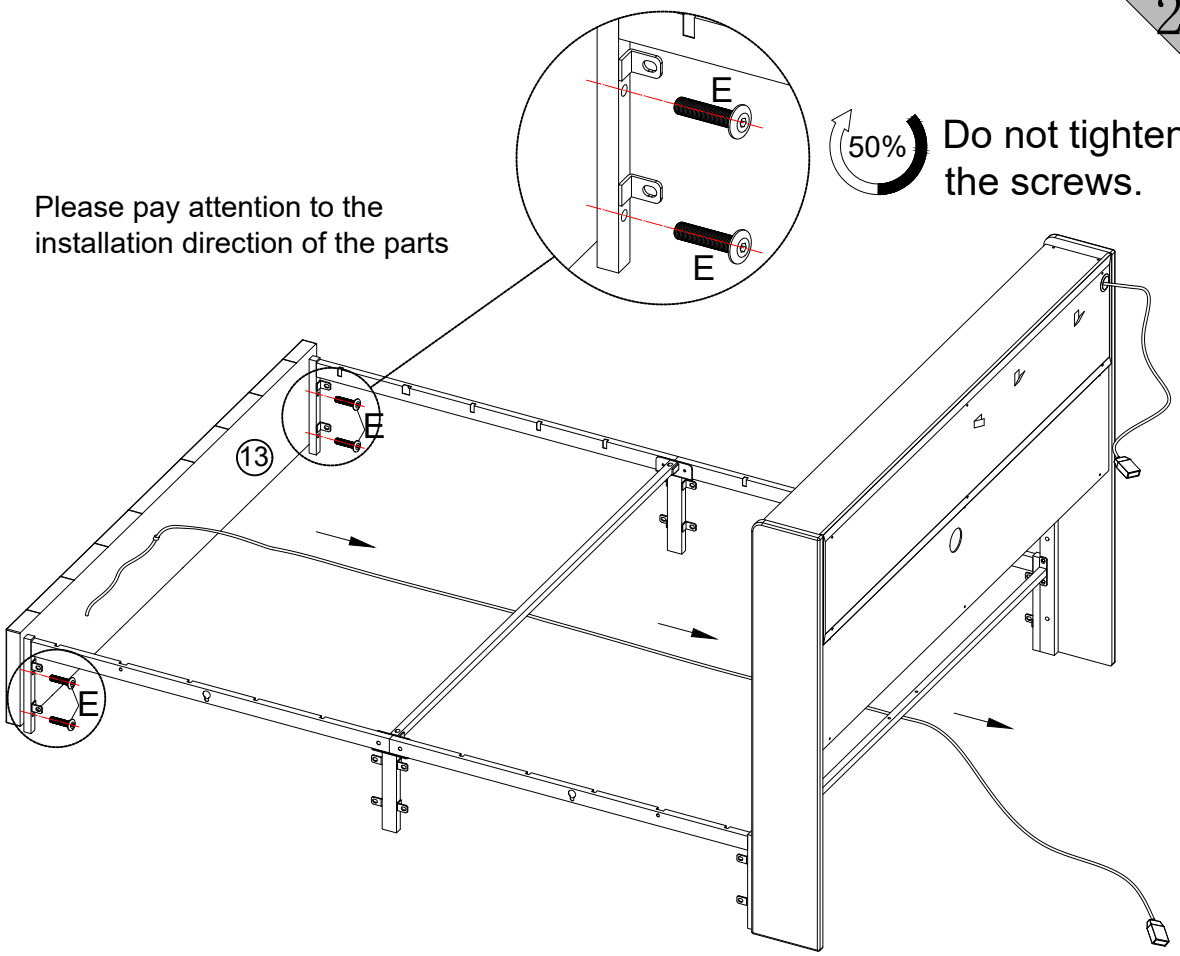

Do not tighten the screws.

Please pay attention to the installation direction of the parts

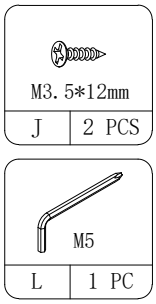

22

Thread the power plug and USB out of the circular hole at the back.

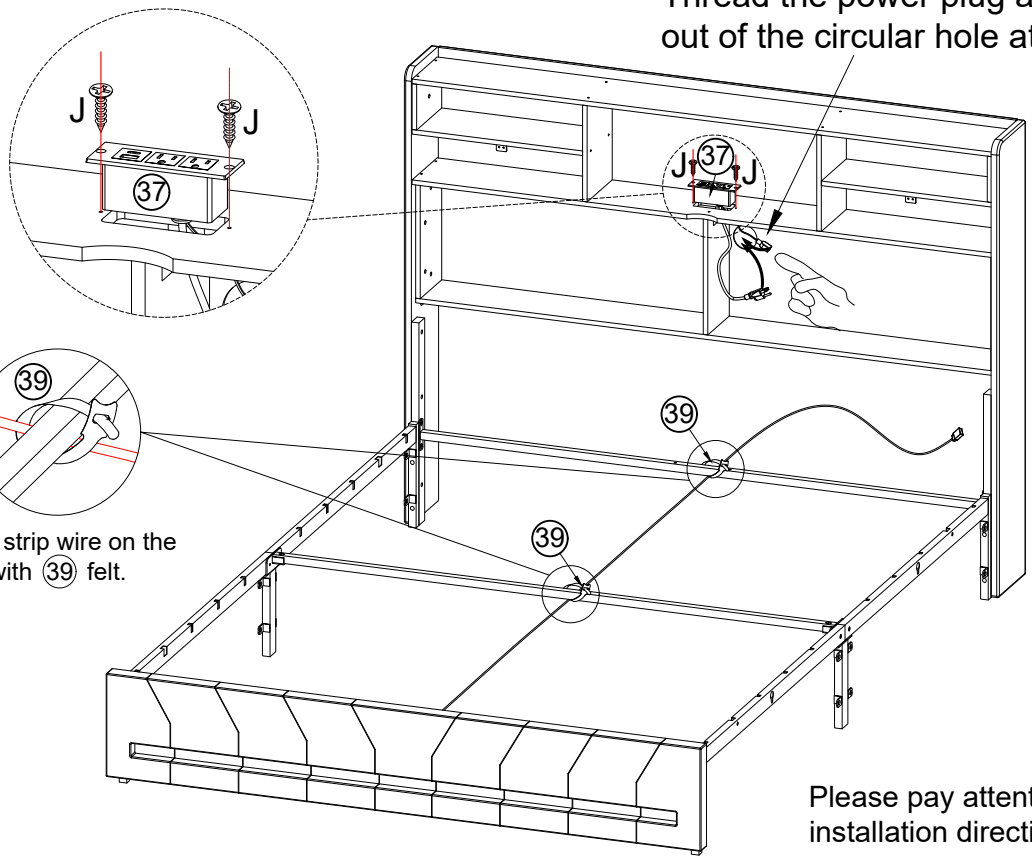

Fix the light strip wire on the iron frame with 39 felt.

Please pay attention to the installation direction of the parts

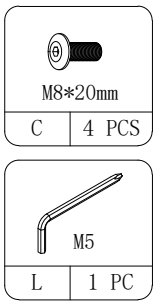

23

Please pay attention to the installation direction of the parts

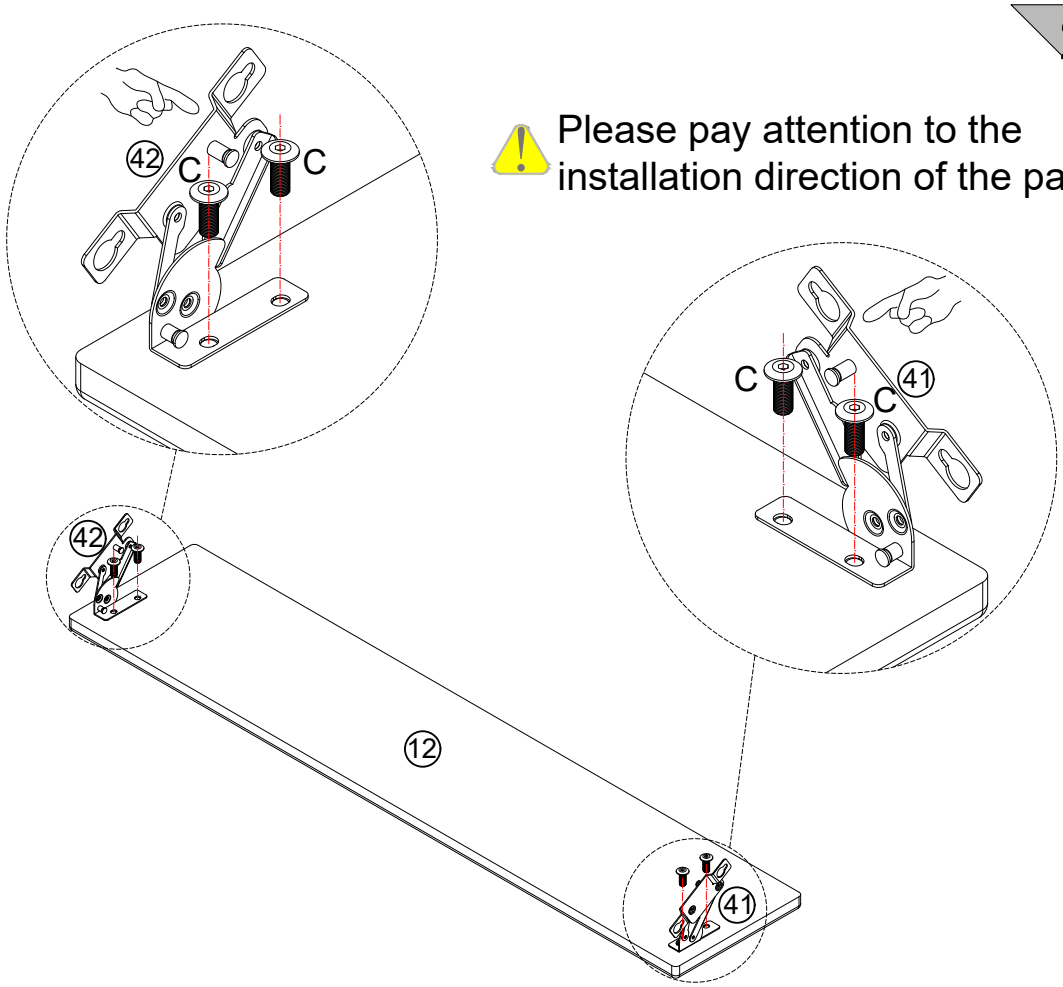

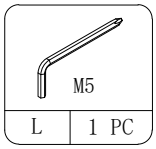

L	1 PC

24

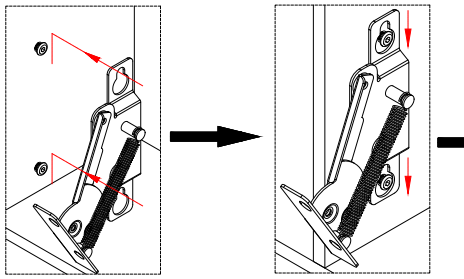

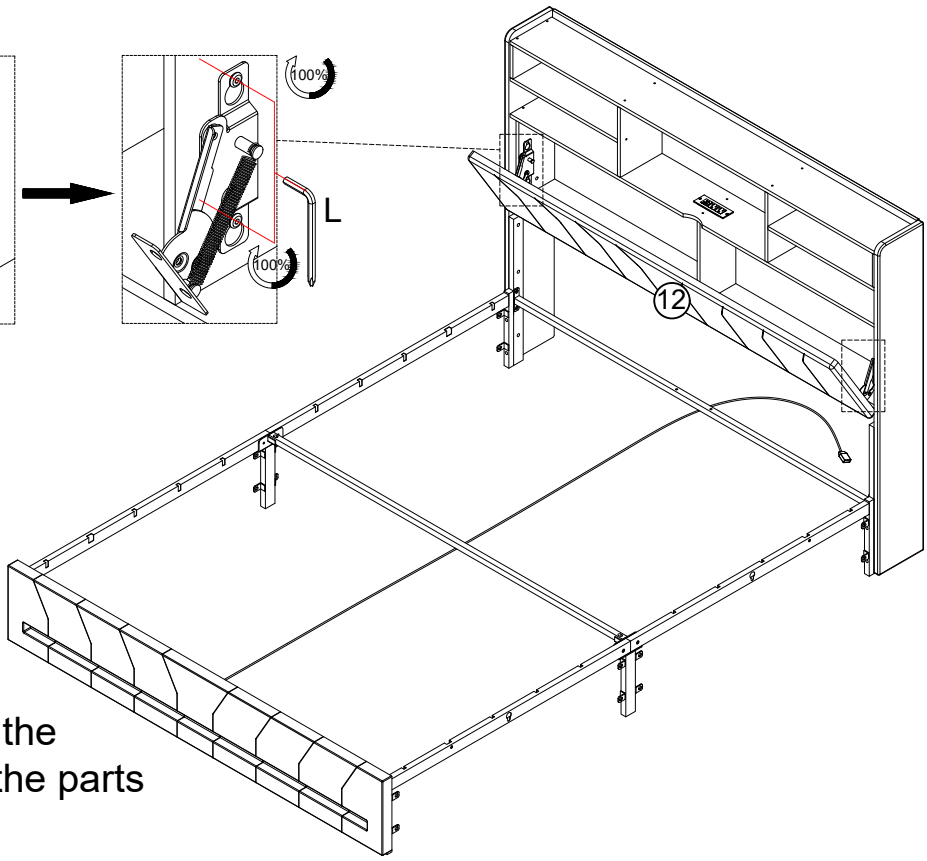

Please pay attention to the installation direction of the parts

25

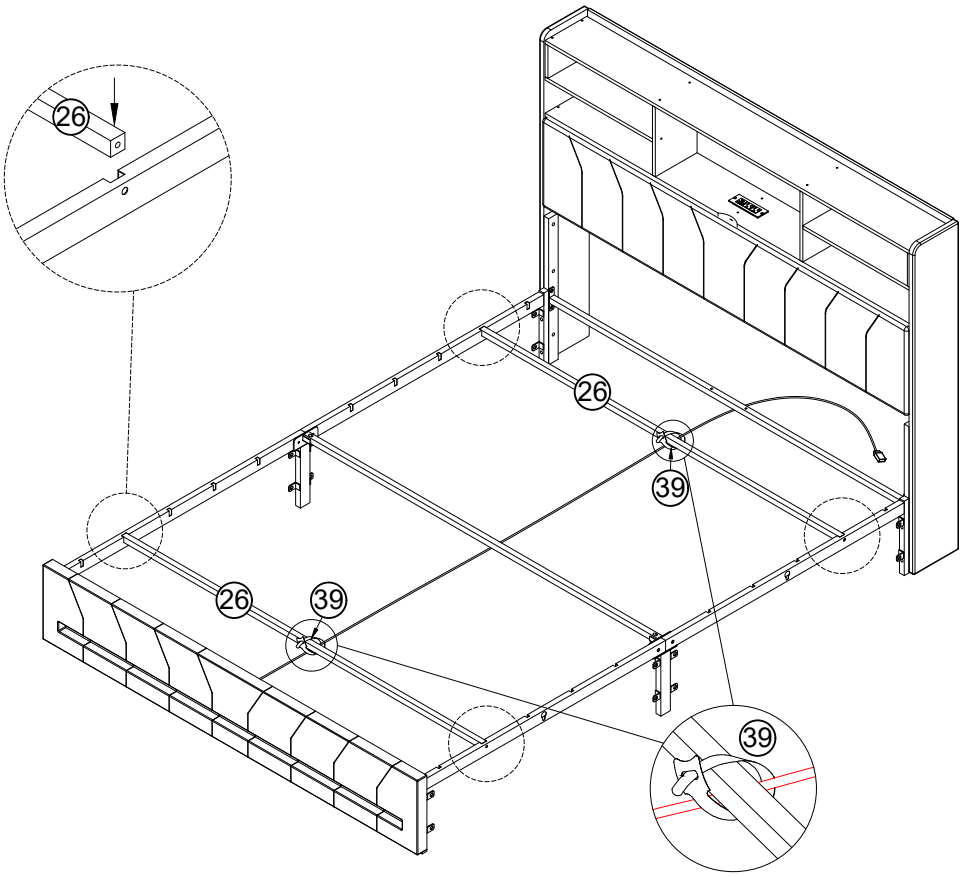

Fix the light strip wire on the iron frame with (39) felt.

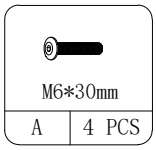

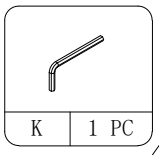

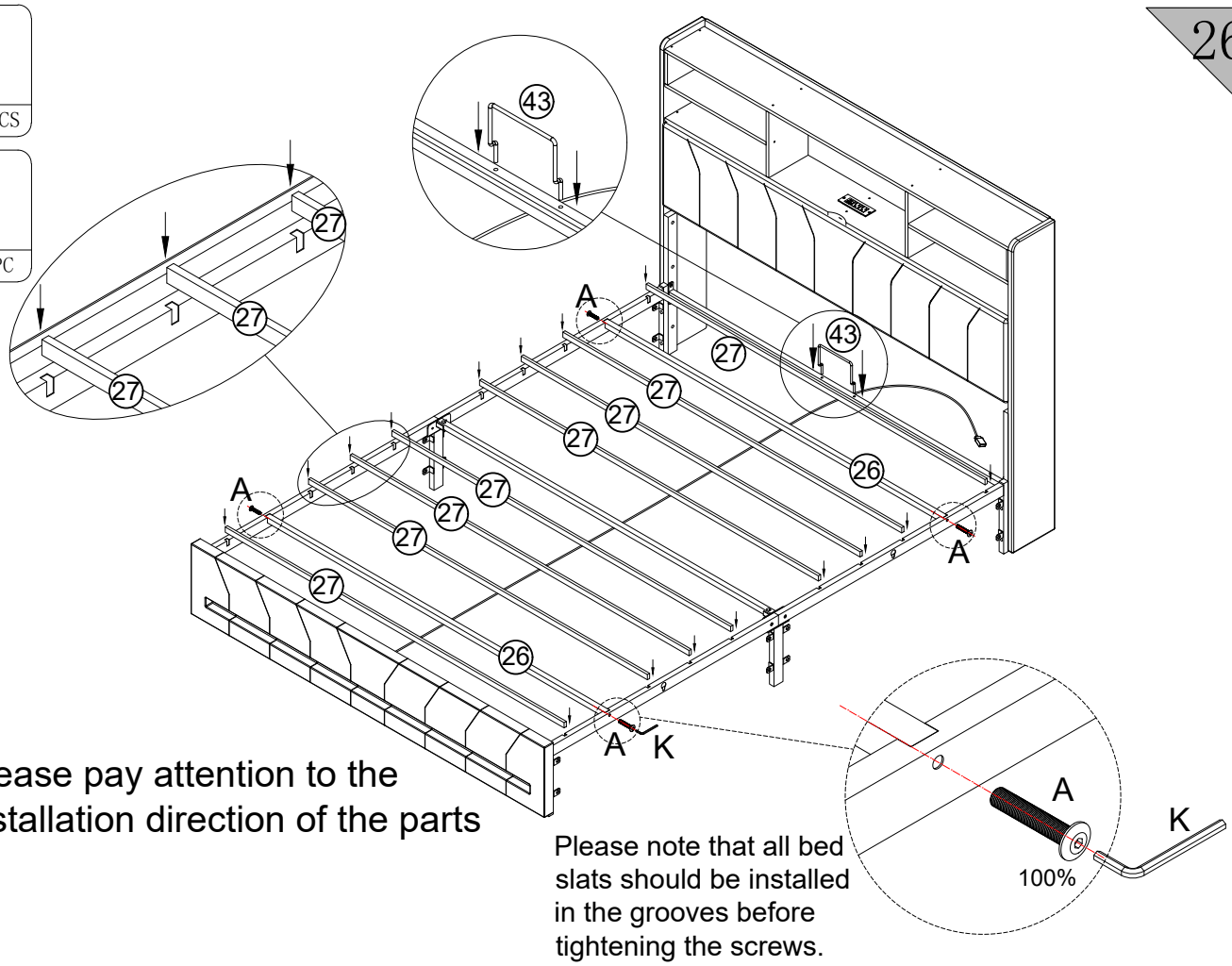

Please pay attention to the installation direction of the parts

Please note that all bed slats should be installed in the grooves before tightening the screws.

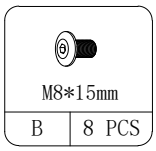

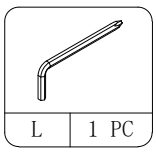

28

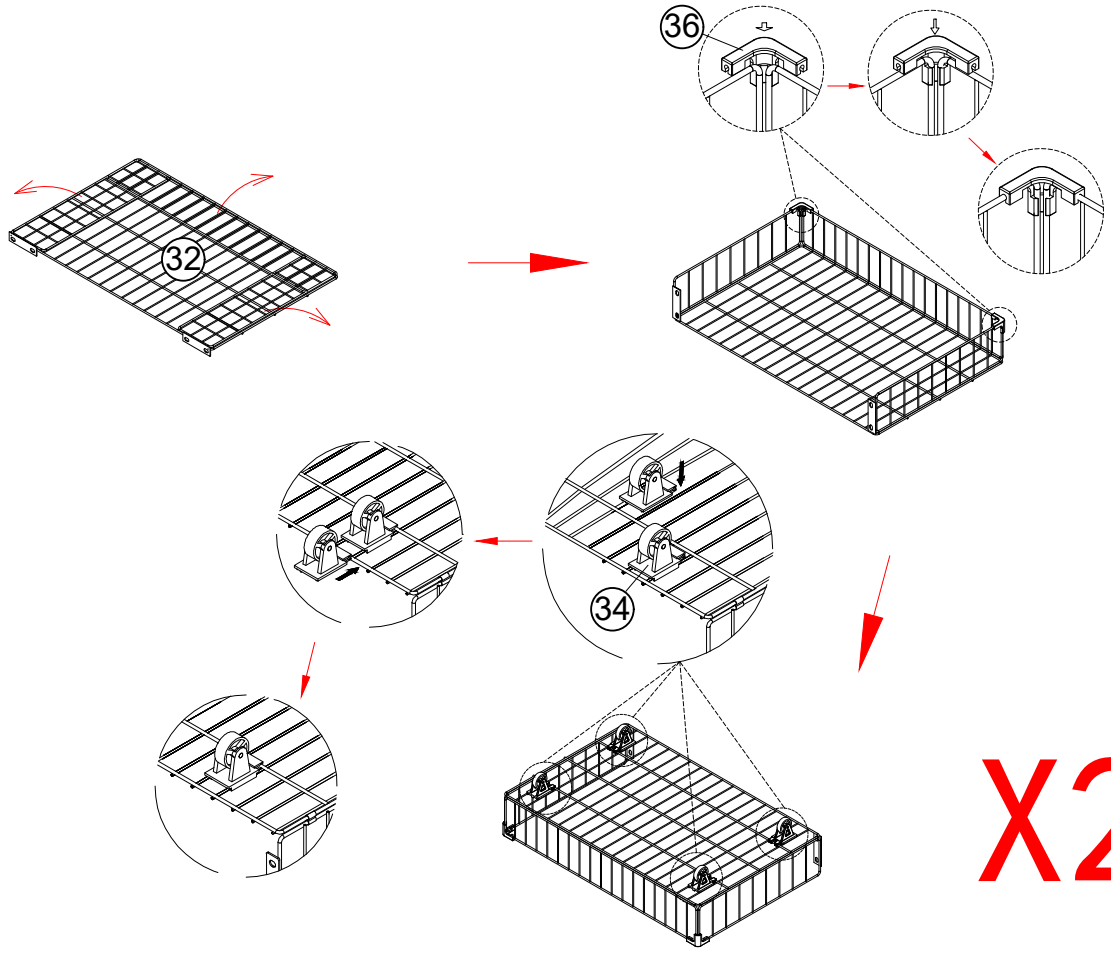

X2

29

 M8*15mm	
B	10 PCS
 M8*20mm	
C	2 PCS
	
L	1 PC

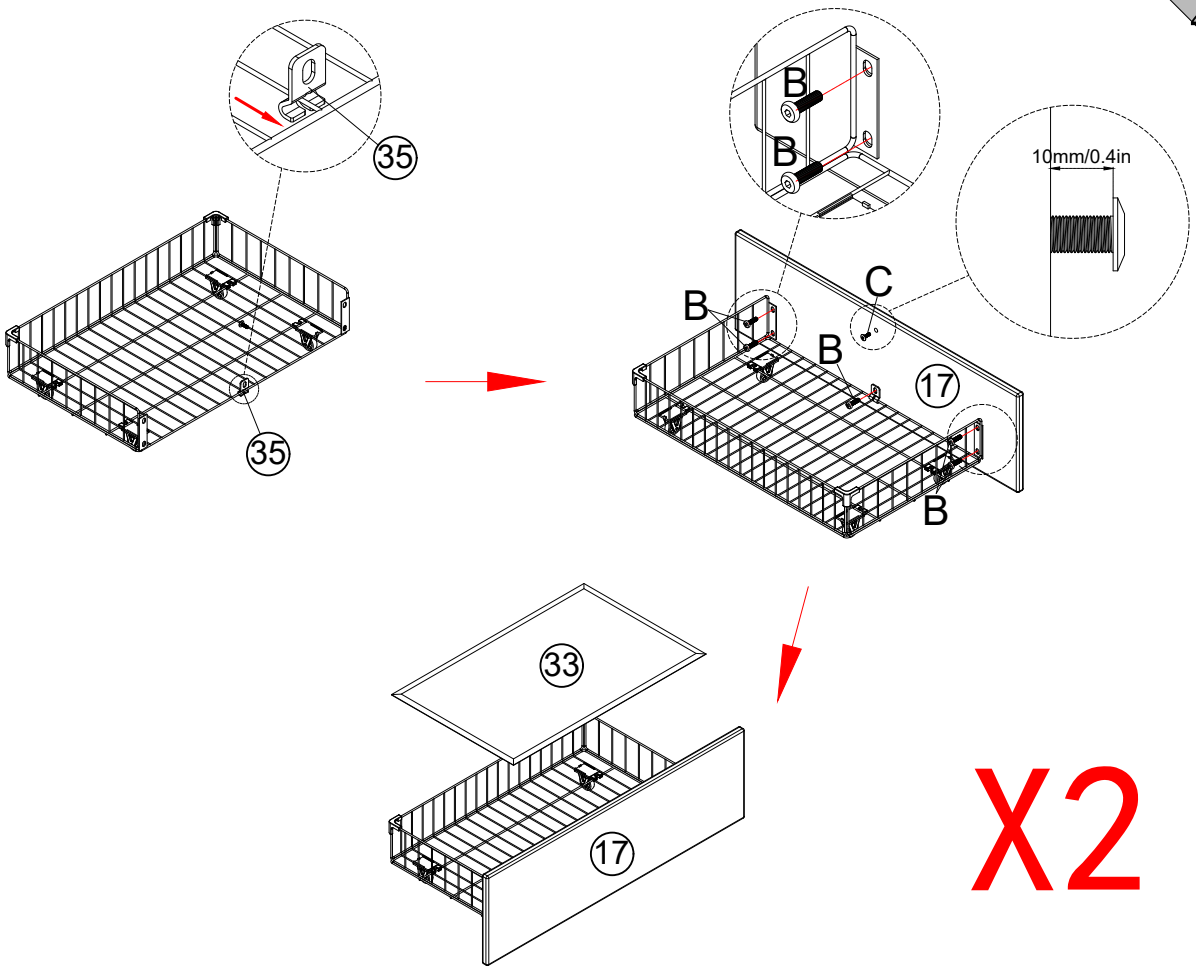

X2

30

100%

Tighten all the screws that were not tightened previously.

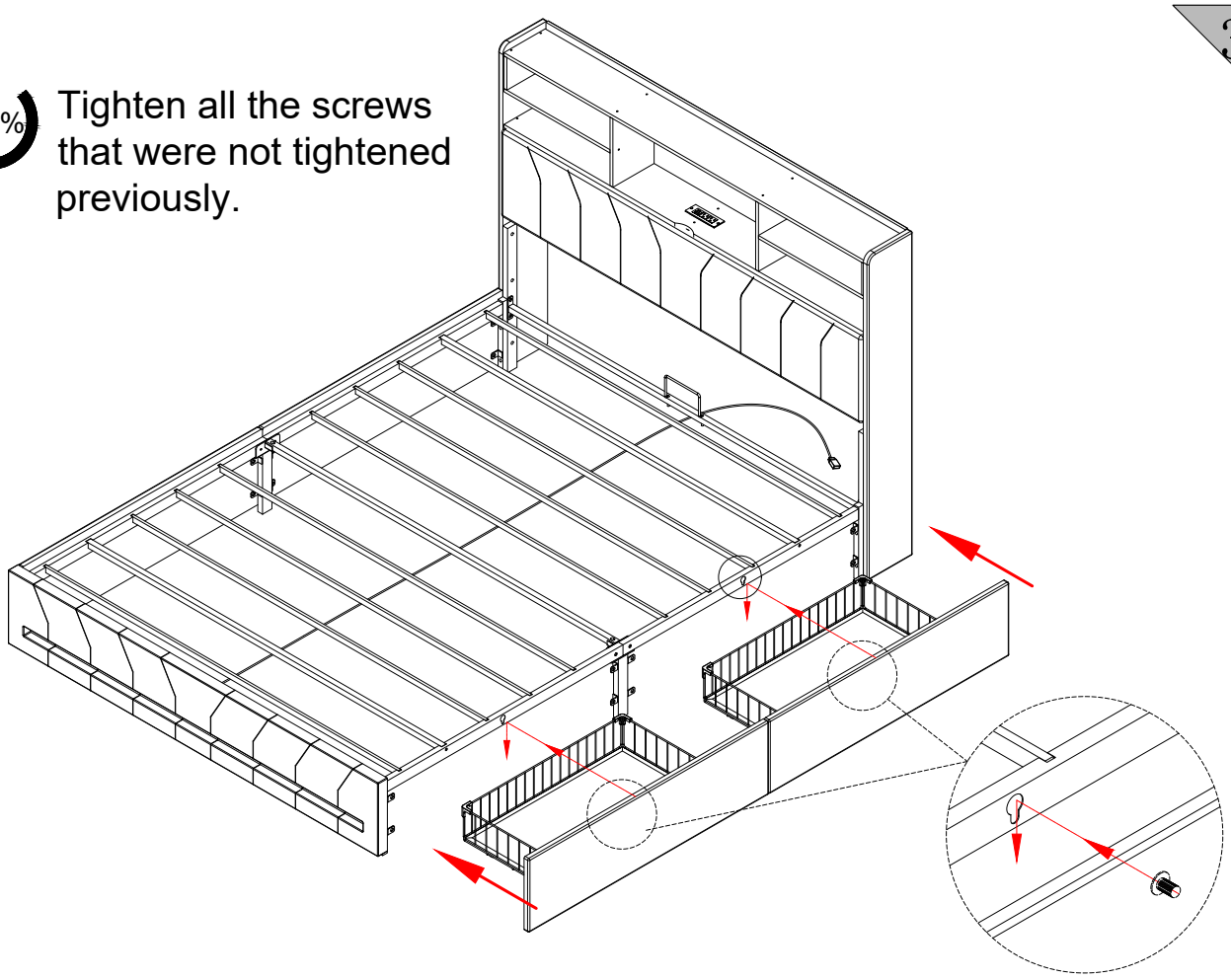

31

M4*8mm	
I	2 PCS
N	2 PCS
L	1 PC

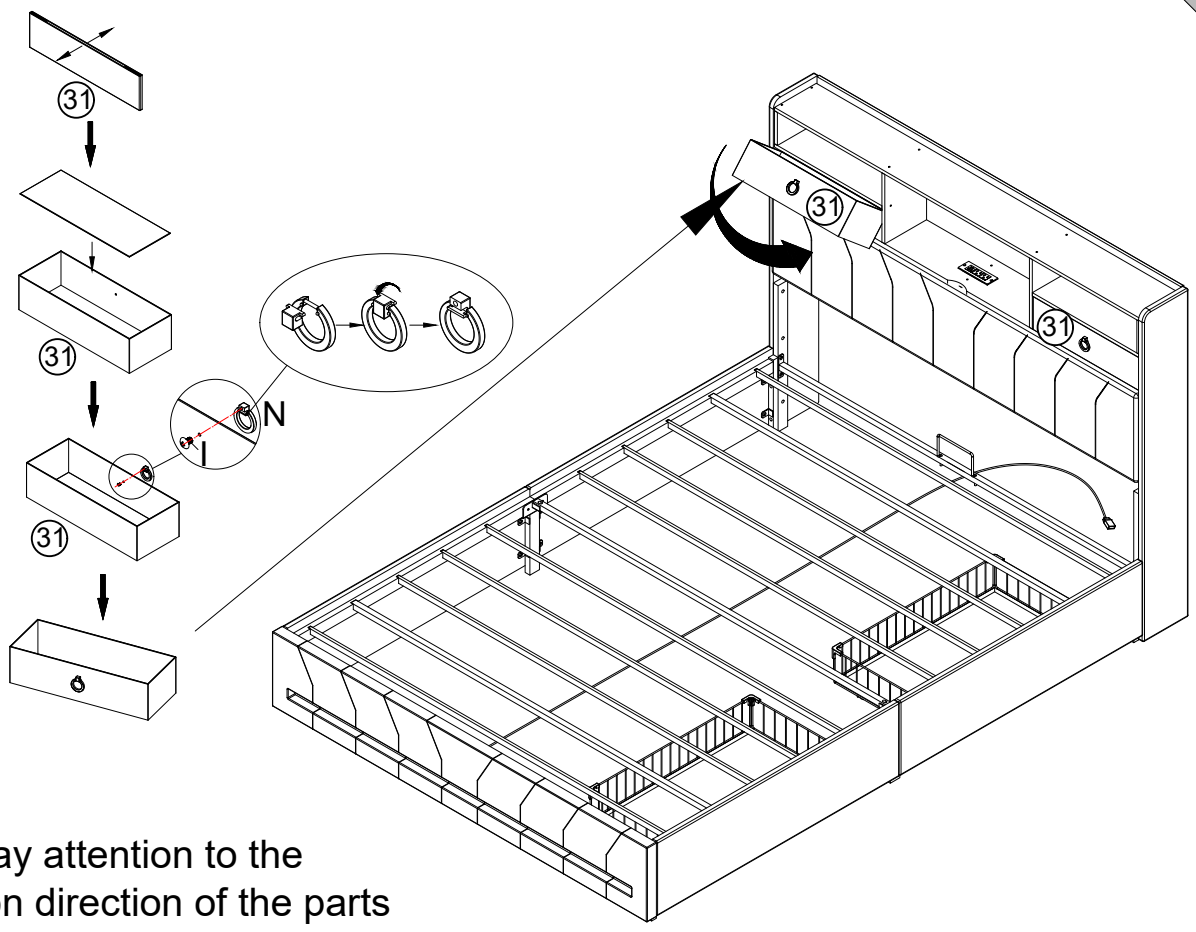

Please pay attention to the installation direction of the parts

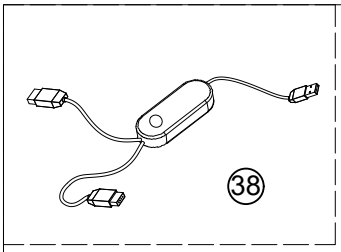

32

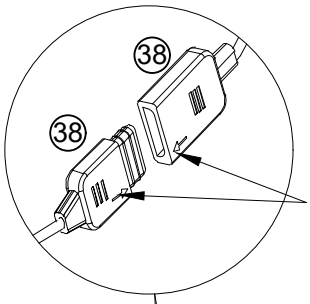

Pay attention to the arrow symbol on the connector

Please place the light strip controller on top of the bed

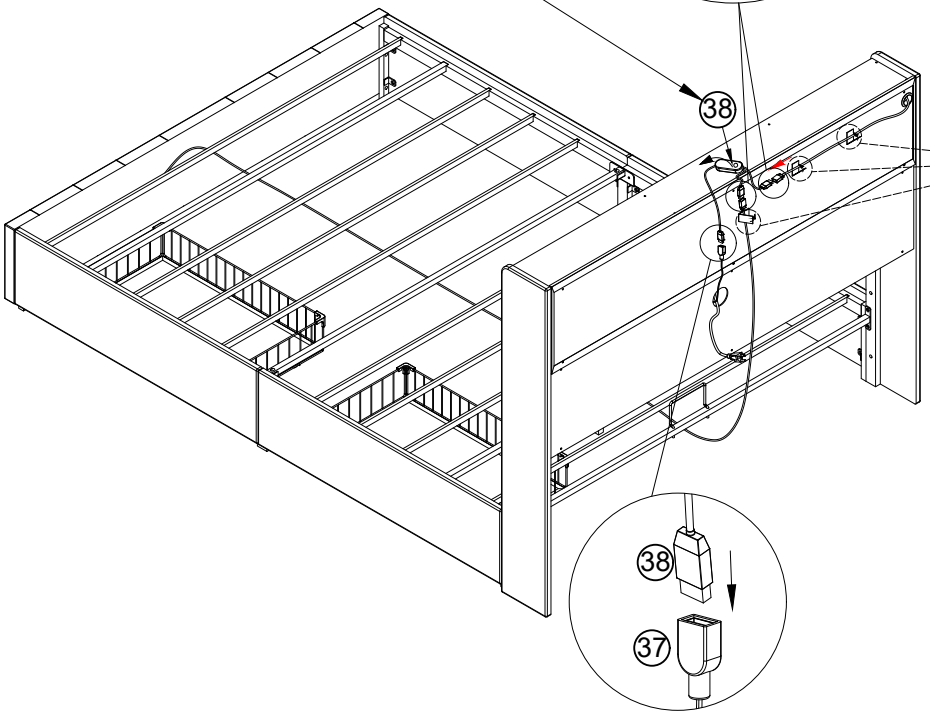

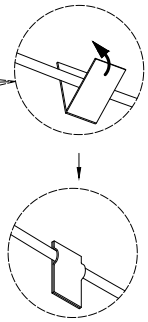

Secure the light strip line with Velcro.

33

