BCAG020

ATTENTION:

1. Please check the manual carefully and make sure you have received all the parts.

2. If there is any missing, please let us know the letter of the parts you need.

3. If there is any damage, please send clear photos to us, we will check and offer you best solution soon.

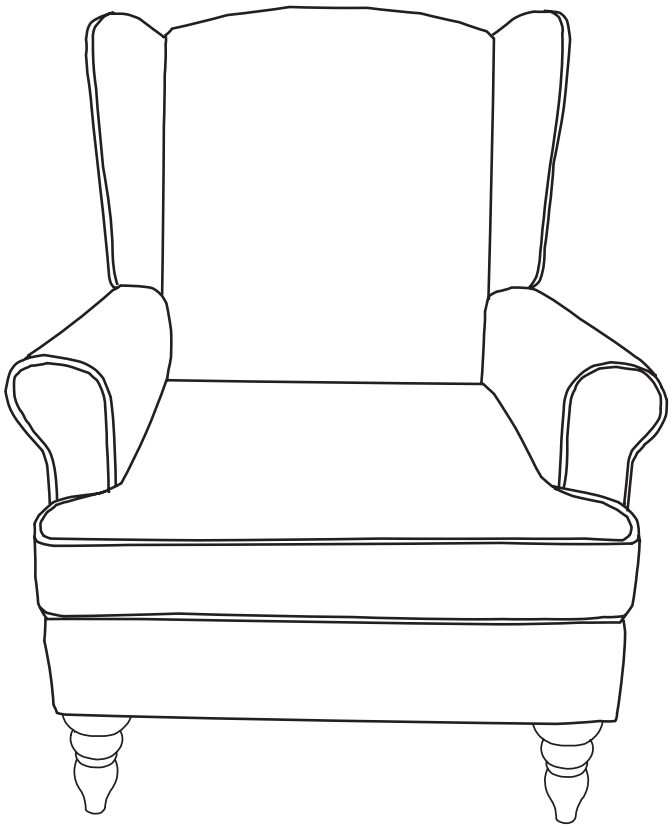

Parts List

A	B	C	D
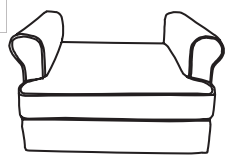	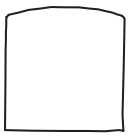		
1PC	1PC	1PC	1PC

HARDWARE LIST

E	F	G
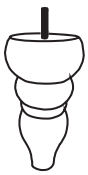		
2PC	2PC	4PC

Assembly

STEP1

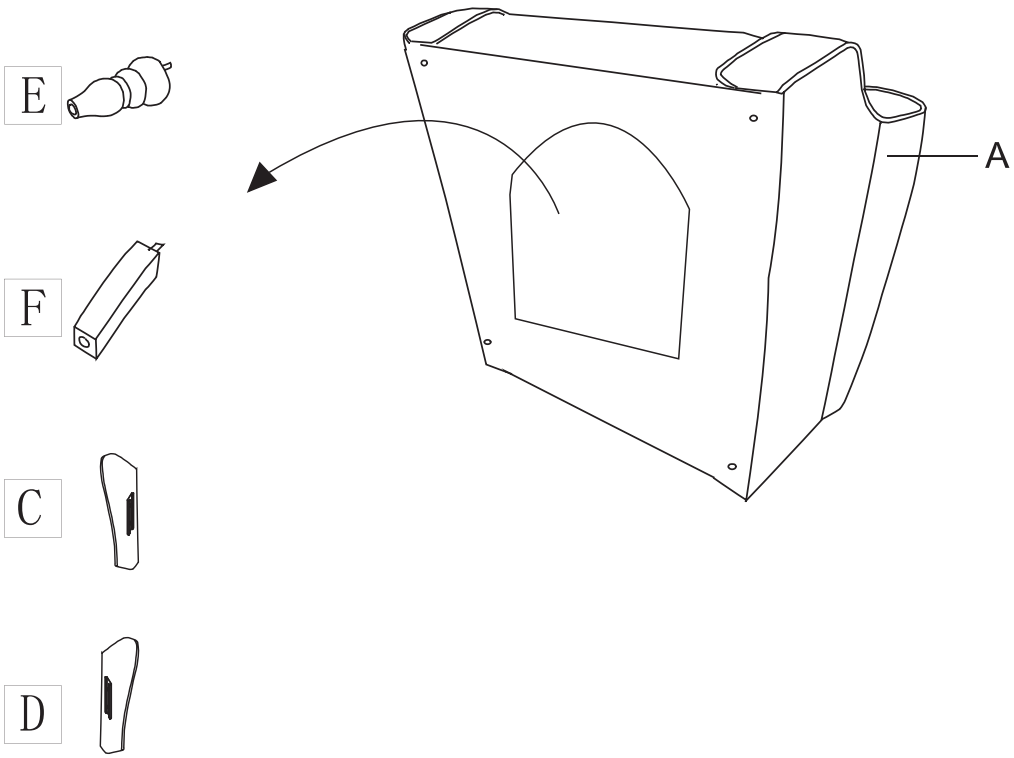

STEP2

A*1
E*2
F*2
G*4

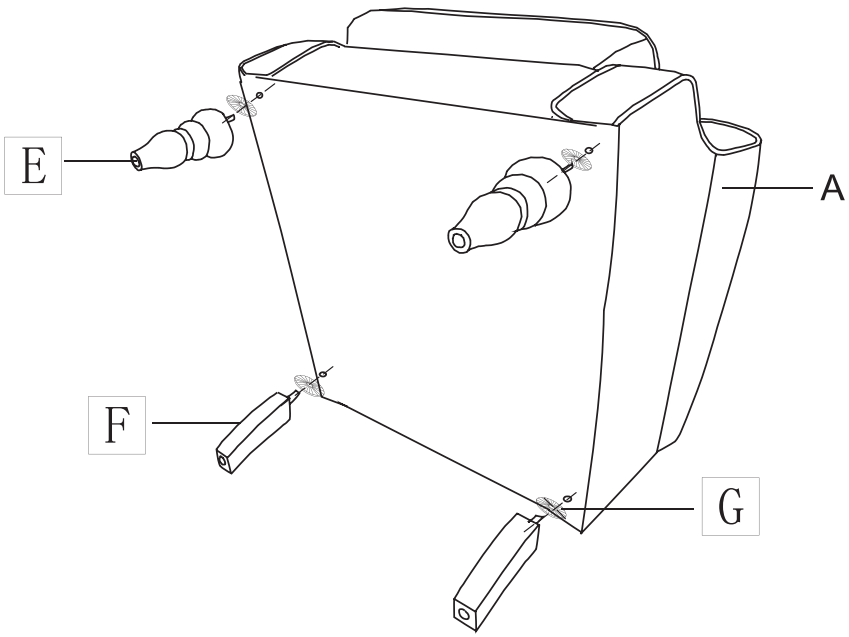

Assembly

STEP3

B*1

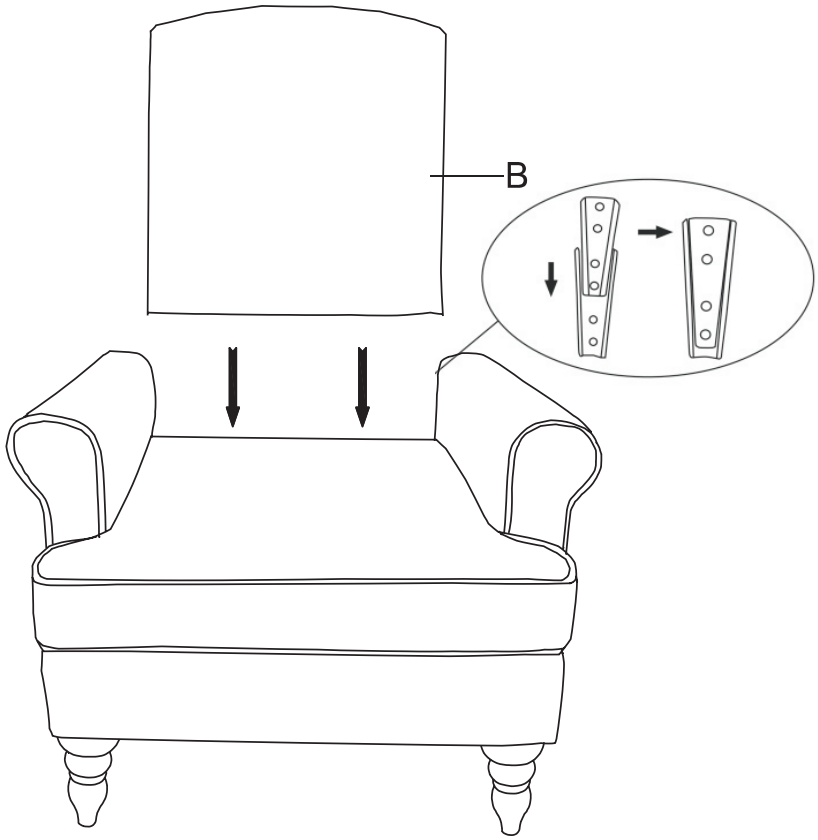

STEP4

C*1

D*1

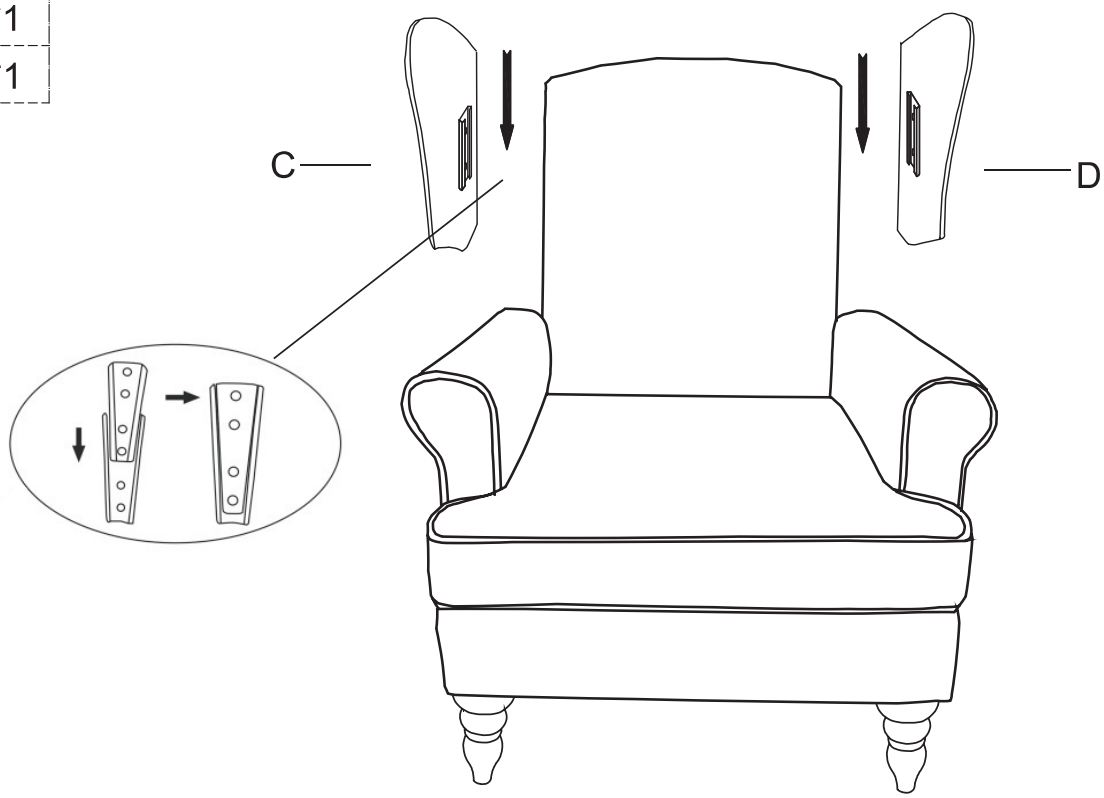

STEP5

