INSTRUCTIONS MANUAL



OUTDOOR COFFEE TABLE RECTANGLE

IF YOU PURCHASED THE PRODUCT ONLINE AND HAVE
ANY QUESTIONS OR CONCERNS
PLEASE CONTACT US VIA EMAIL,TEXT,OR PHONE

Date of Manufacture: 26W15

WARNING

1. Very important ！

After receiving the product, please check if all parts are intact.

Do not open the vacuum-sealed packaging of the cushion immediately.

Only proceed with opening the packaging if you are satisfied with the product.

2. When unpacking the box, please use tools carefully to avoid scratching the cushion.

Note: Since the cushion is vacuum-packed, if you are not satisfied with the product after opening, it may affect the after-sales process.

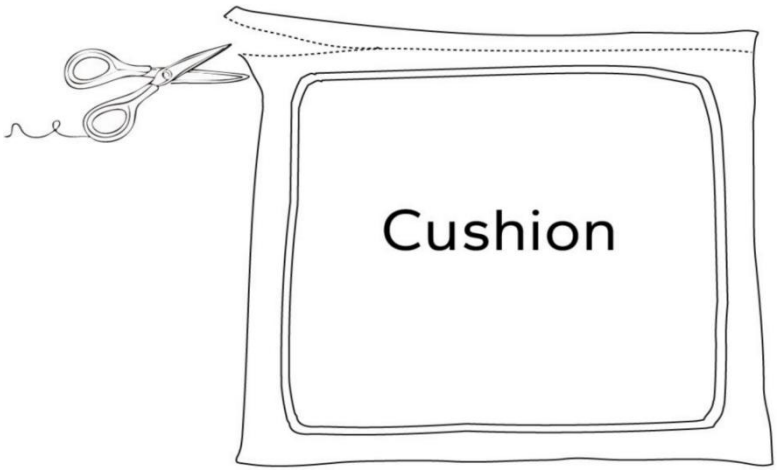

Warning and Cautions:

Thank you for choosing our furniture. Please read and understand this entire manual before attempting to assemble or install the product.

GENERAL BEST PRACTICES FOR ASSEMBLY

1. Familiarize yourself with the product and check all parts against the packing list. If any Parts are missing or damaged, do not install. Contact us immediately.

2. Some parts may contain sharp edges. Wear protective gloves, if necessary, during assembly.

3. Check all nuts and bolts periodically for tightness and, when required, tighten them again.

4. Pay attention to the parts orientation.

5. Save all packing materials until assembly is complete to avoid accidentally discarding smaller parts or hardware.

IMPORTANT

●Make sure to place the washer on the bolt before inserting it into the bolt hole.

●To ensure the best fit, assemble loosely before tightening.

●Tighten all bolts after all parts are assembled.

WARNINGS

⚠ **Keep children and pets away from the working area during assembly and adjustments.**

1. Keep the assembly area at least 6 feet from any obstruction, such as a fence, garage, house, overhanging branches, laundry lines, or electrical wires.

2. When assembling and using this product, always follow basic safety precautions to reduce the risk of personal injury and product damage. Please read all instructions before assembly and use.

3. Check all bolts for tightness before use. IMPORTANT - check and tighten bolts often to keep them secure!

4. The sofa is not to be used for standing purposes and will not function as a stool or step-ladder. Use on even surfaces only.

5. The sofa supports a weight of 700 lb (318 kg) per seat,, the table supports a weight of 70lb (31 kg). Improper use of this product or failure to use it as directed may result in injury. Not intended for commercial us.

WARRANTY

•WHAT IS COVERED?

•The limited warranty is extended to the original purchaser and covers material and manufacturing defect, provided the item is properly maintained and used for personal residential purposes only.

•Warranty: 180 DAYS.

•Lost Accessories or Parts Policy: Costs for lost accessories or parts will be charged after 90 days from the date of purchase.

MAINTENANCE

•**STAIN RESISTANT CUSHIONS CARE:** Keep cushions in storage on rainy days.

•**SPILLS:** Immediately wipe up spills using a white damp cloth. Repeat if necessary until the stain is gone. Allow cushions to air dry.

• **FABRIC CARE:** Hand wash with cold water, non-chlorine bleach when needed, and lay flat to dry. Cool iron if necessary. Do not dry clean.

• RESIN WICKER PRODUCT CARE:

1. General Cleaning: Before use, clean the product with a soft, dry towel. When not in use, wipe off any dirt or loose debris. For regular cleaning, use a mild soap and water solution, rinse thoroughly, and dry completely.

2. Weather Protection: To prolong the life of your resin wicker, avoid prolonged exposure to intense sunlight or heavy rain. Whenever possible, use a protective cover when the furniture is not in use,
especially during extreme weather conditions.

3. Avoid Harsh Cleaners: Do not use strong detergents or abrasive cleaners, as these may damage the finish.

•**Regular Maintenance:** Over time, nuts and bolts may loosen. Occasionally check and re-tighten them on all products as needed.

Part List

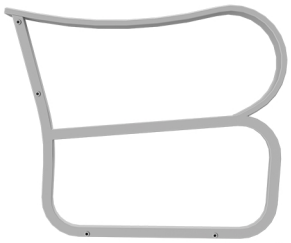
Ax1

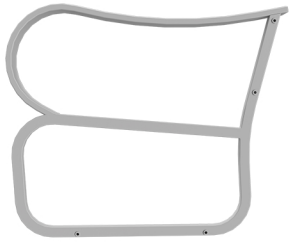
Bx1

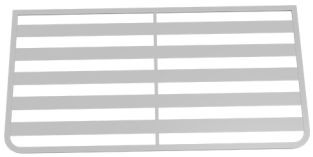
Cx1


Dx1


Ex1


Fx1

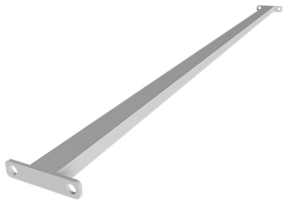
Gx2


Hx1


Ix2


M6*25
Jx8


M6*22
Kx8


M6*15
Lx8


M6
Mx24


Nx2


Ox2


Px1



Please ensure you follow these instructions

It is incorrect to completely tighten the screws at the very beginning during the installation process. Just make sure that all the components can be fixed in place. Please wait until all the screws are installed before tightening them one by one.

1

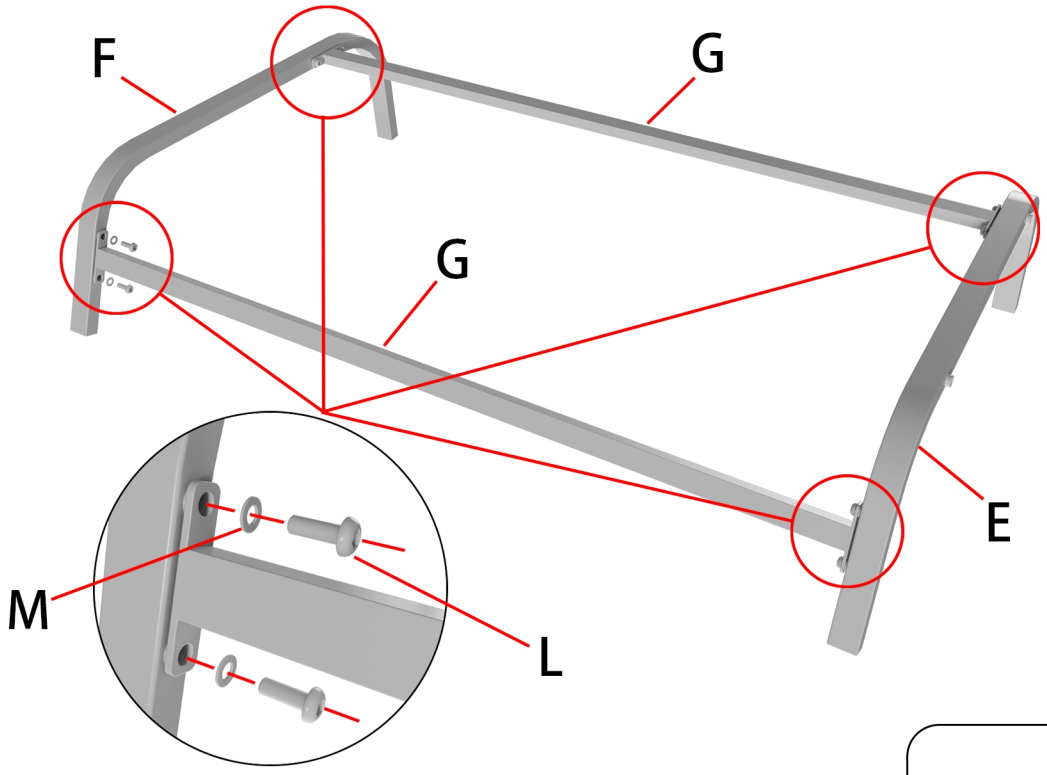



2

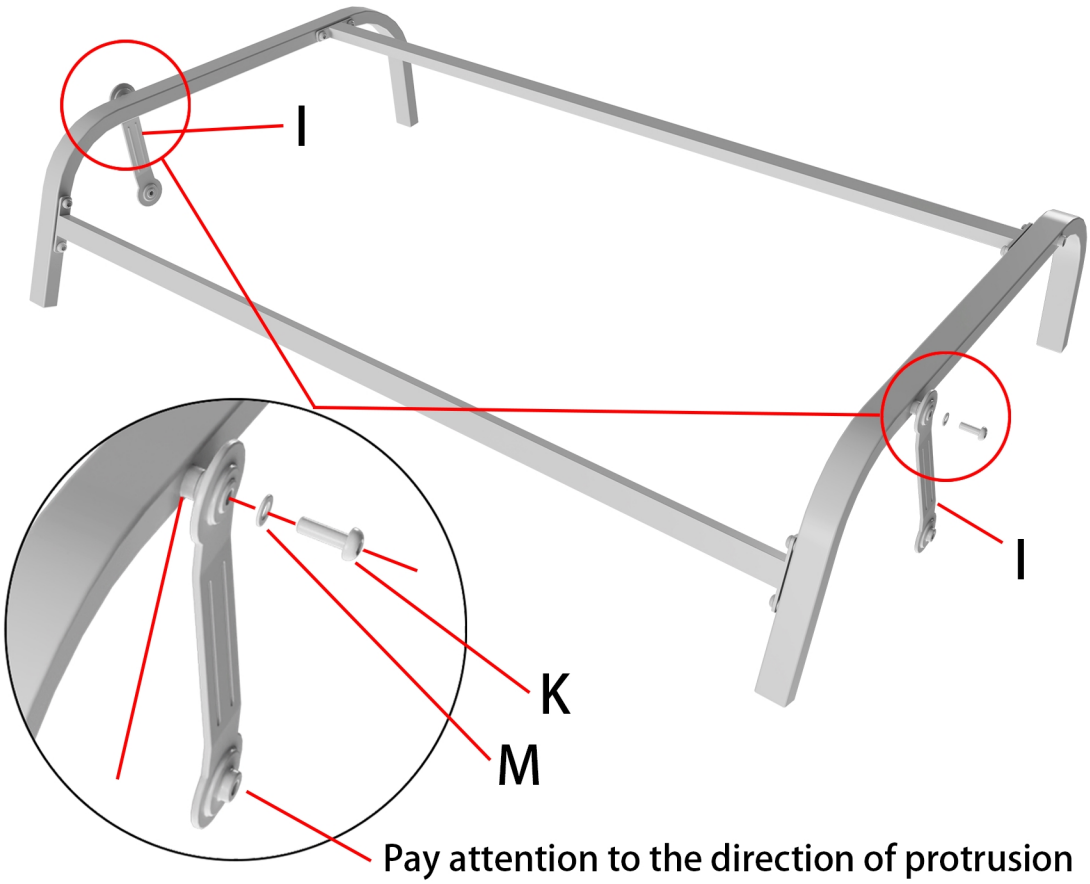

Pay attention to the direction of protrusion

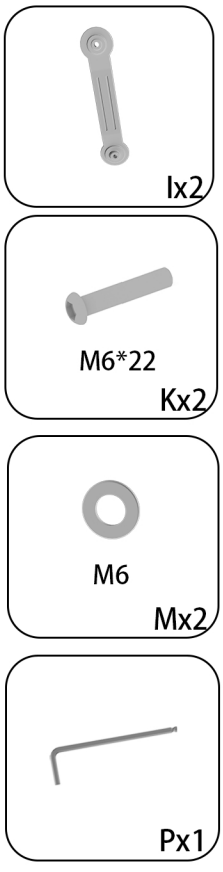

3

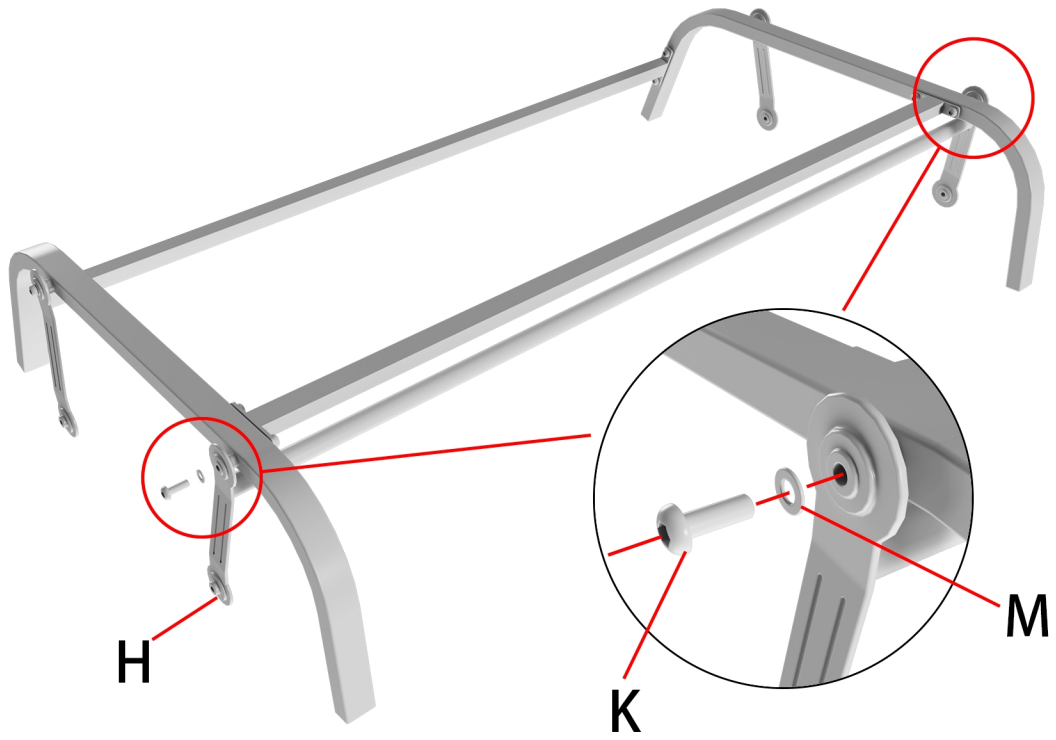



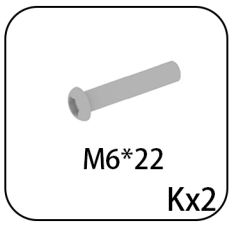

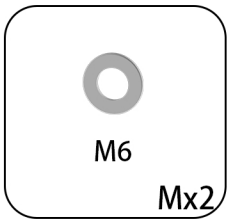

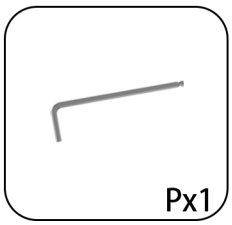

4

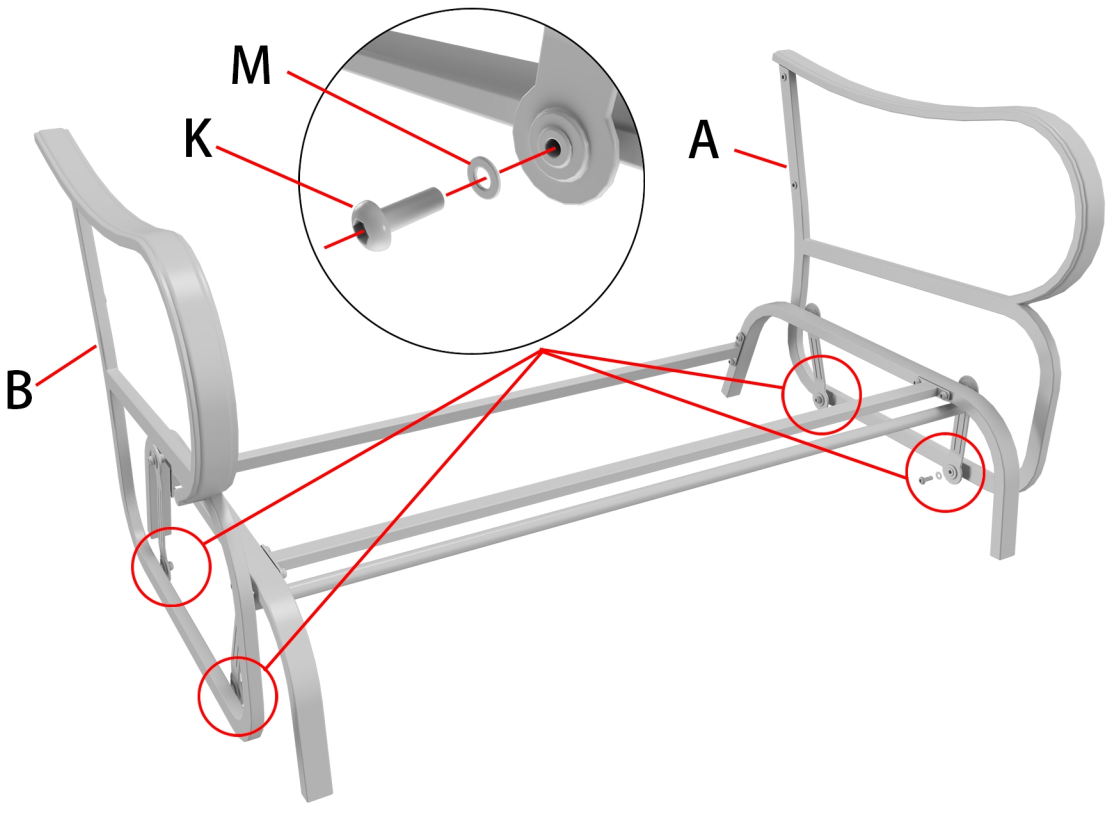

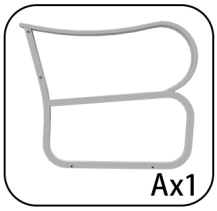

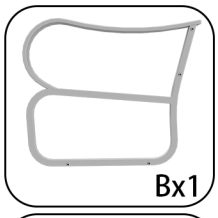

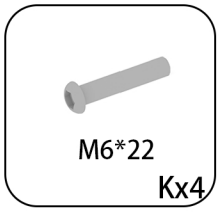

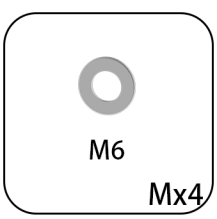

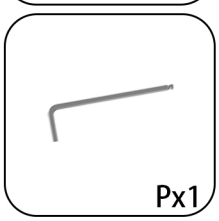

Assemble with two people

5

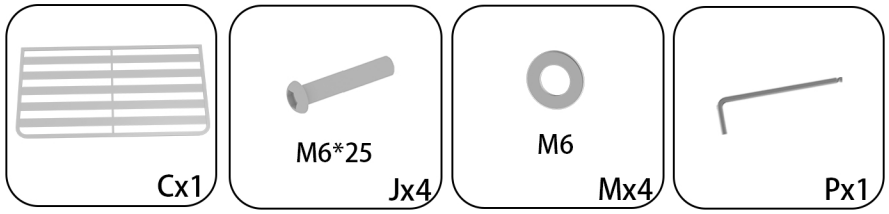

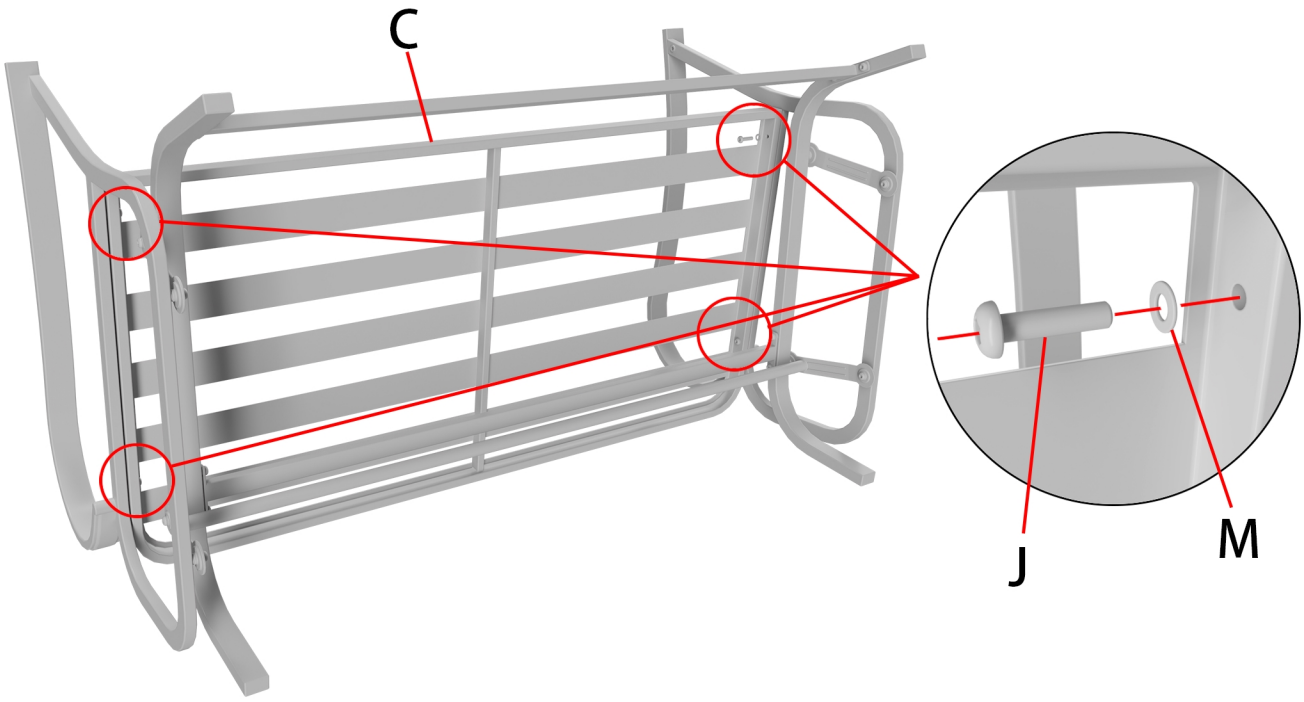

Assemble with two people

6

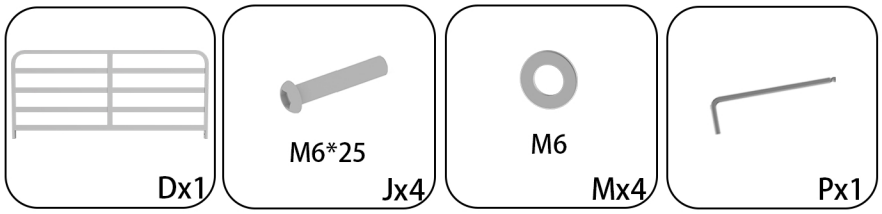

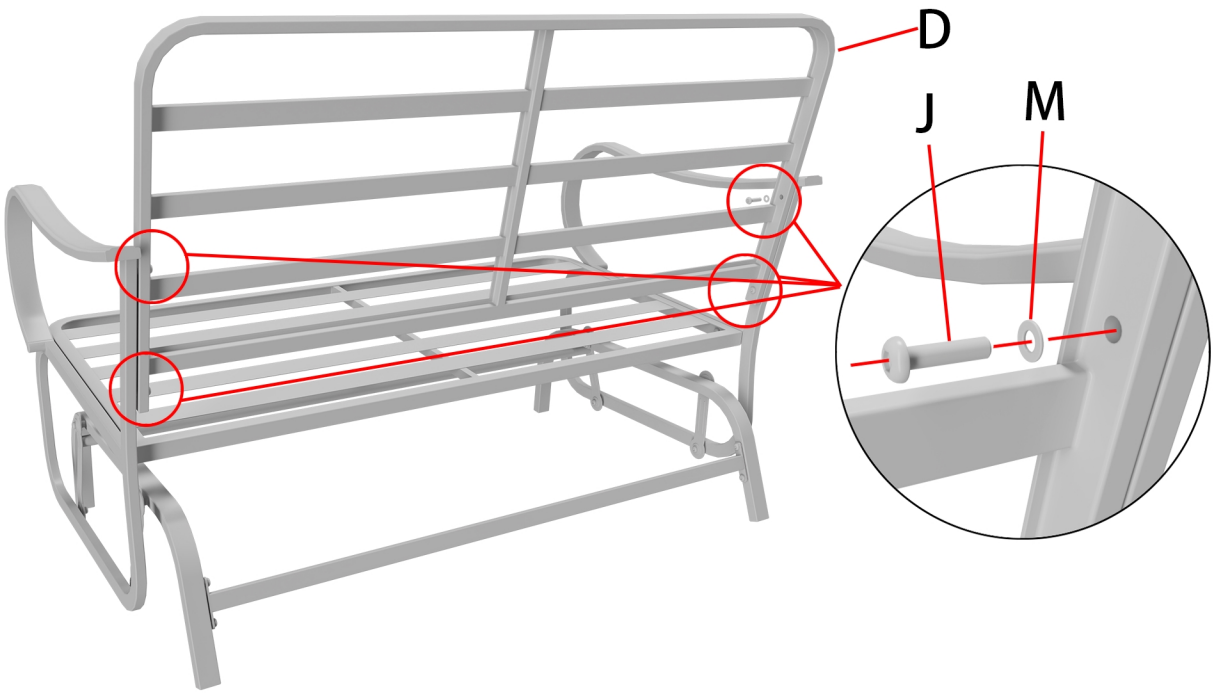

Assemble with two people

7

