4 Fix the Fixture Body onto the Mounting Bracket with Cap Nut

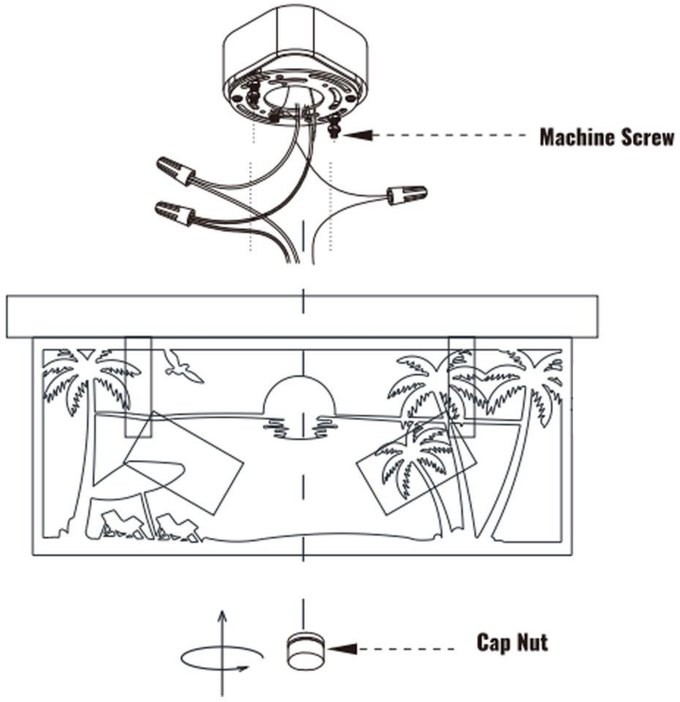

5 Install 2 E12 bulbs and adjust to your preferred lighting angle (bulbs not included)

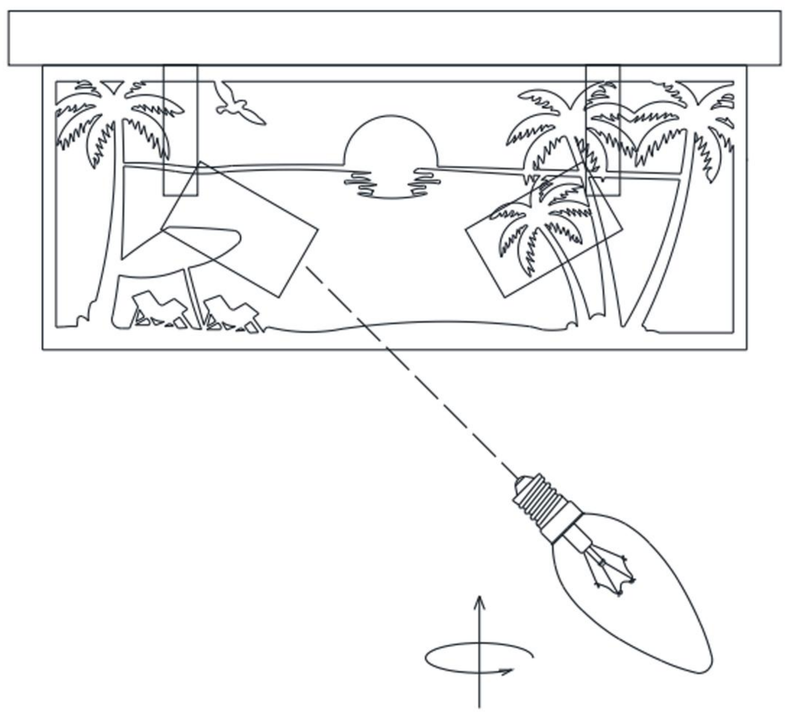

INSTALLATION GUIDE FOR 70125

WARNINGS AND CAUTIONS

Released Date:2026-01

READ AND SAVE THESE INSTRUCTIONS

Please read and understand this entire manual before attempting to assemble, install or operate the product.

WARNING

- RISK OF ELECTRIC SHOCK - Before beginning installation, turn off electricity at the circuit breaker box or the main fuse box.
- RISK OF FIRE - Use bulbs specified by the markings and/or labels on the fixture.

CAUTION

- For your safety, read instructions completely before beginning installation.
- If in doubt about electrical installation, consult a licensed electrician.
- Tum off electricity to fixture before replacing the bulb(s).

TOOLS REQUIRED

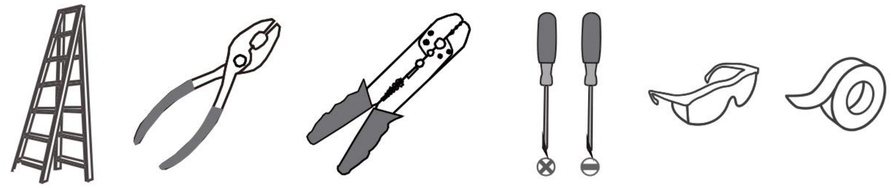

CARE AND MAINTENANCE

- Wipe clean using soft, dry cloth or static duster. Always avoid using harsh chemicals and abrasives to clean fixture as they may damage the finish.

If you need further assistance contact our After Customer Care at

betteraftersaleservice01@outlook.com,

we will reply you in 24 hours.

PACKAGE CONTENTS

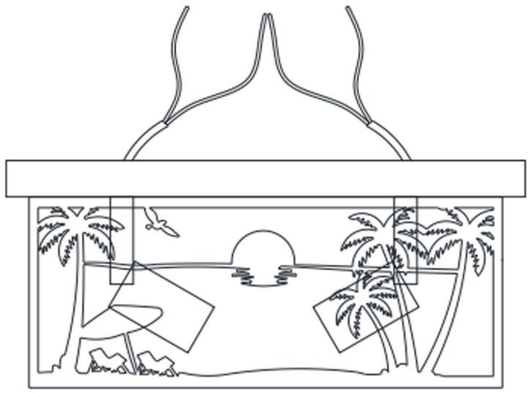

A Fixture Body
x 1

PACKAGE CONTENTS (PARTS BAG 1)

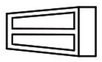

AA Wire Connector
x 4



DD Mechanical Screw
x 2



BB Screw
x 4



EE Mounting Bracket
x 1



CC Wall Anchor
x 4

INSTALLATION

1 1. Unscrew and remove the cap nut (part No.1)
2. Take out the Mounting Bracket

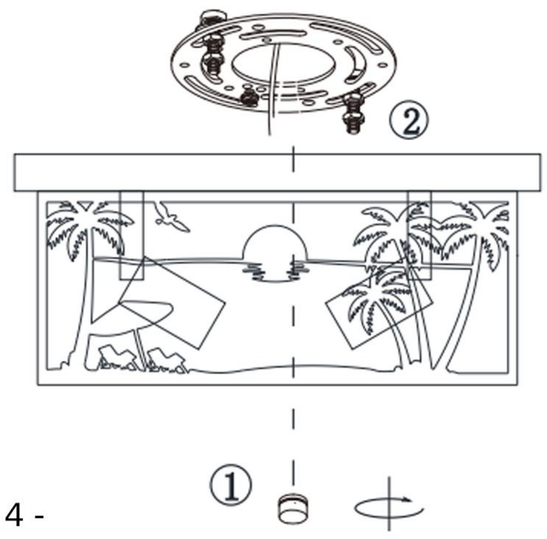

INSTALLATION

2 Install the mounting bracket

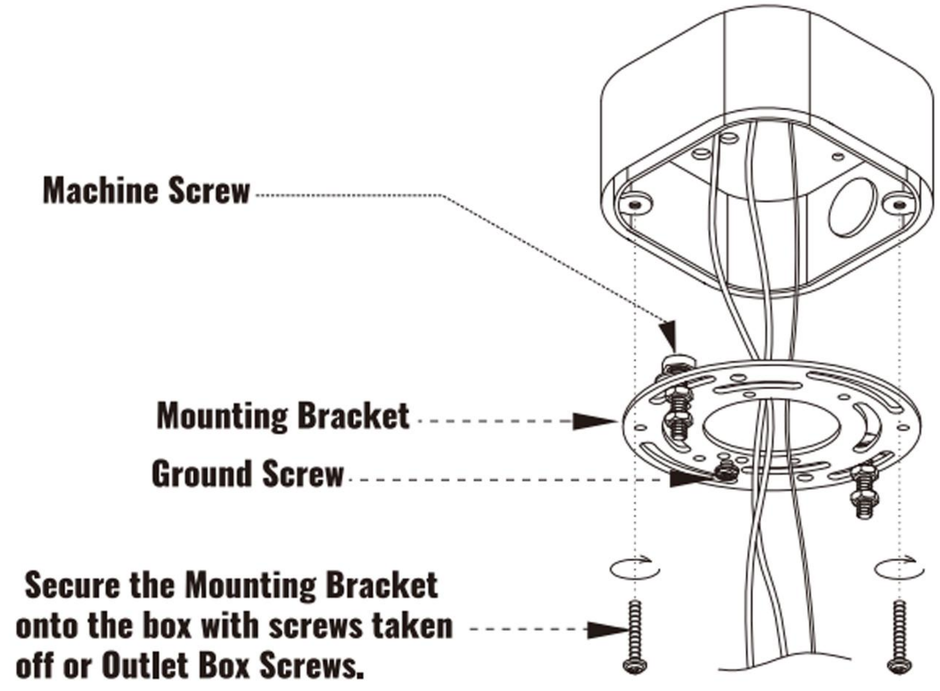

3

Step 1: Connect the wires from the fixture to the house supply wires nuts, ground wire (green, green/yellow, or bare) to ground wire, neutral wire(white)to neutral wire, and hot wire (black) to hot wire. Wrap the connection with electriacl tape.

Step 2: Spread apart the wires so that the hot wrires are on one side of the outler box and the neutral wires are on the other side.

