Instruction Manual

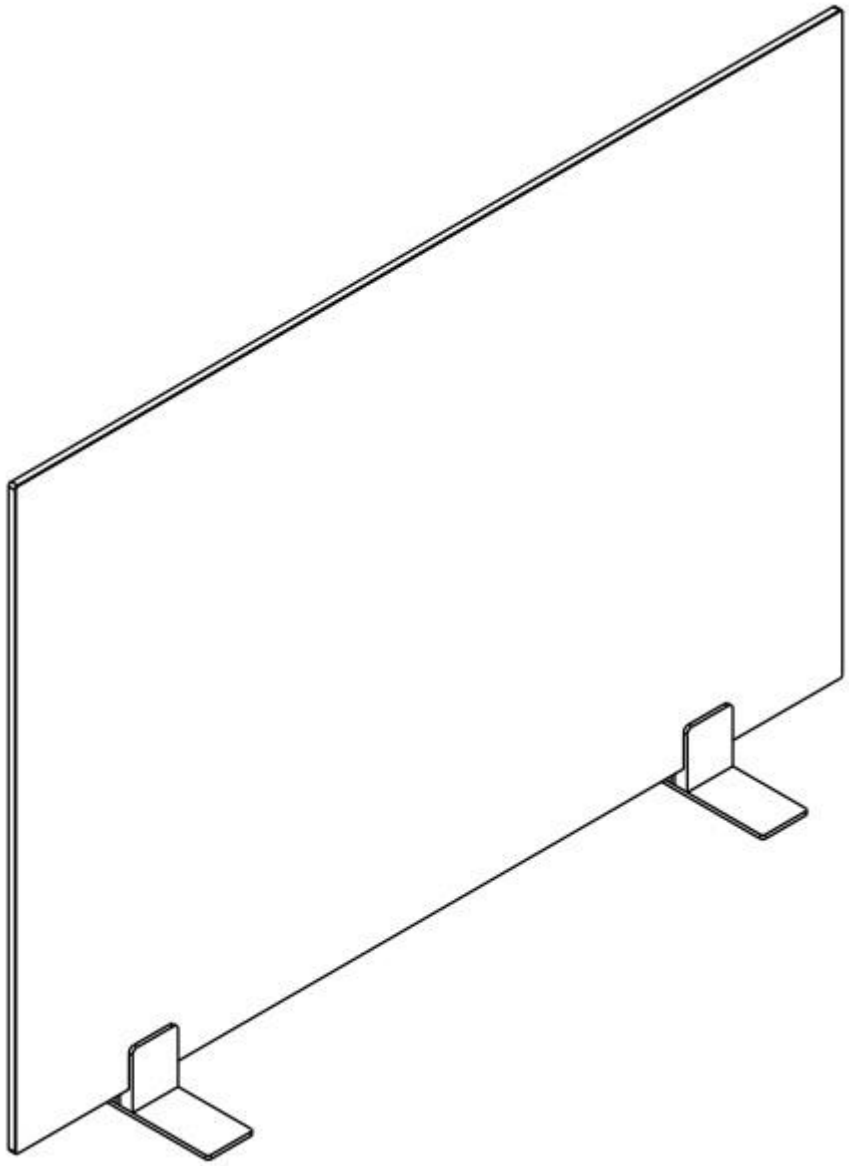

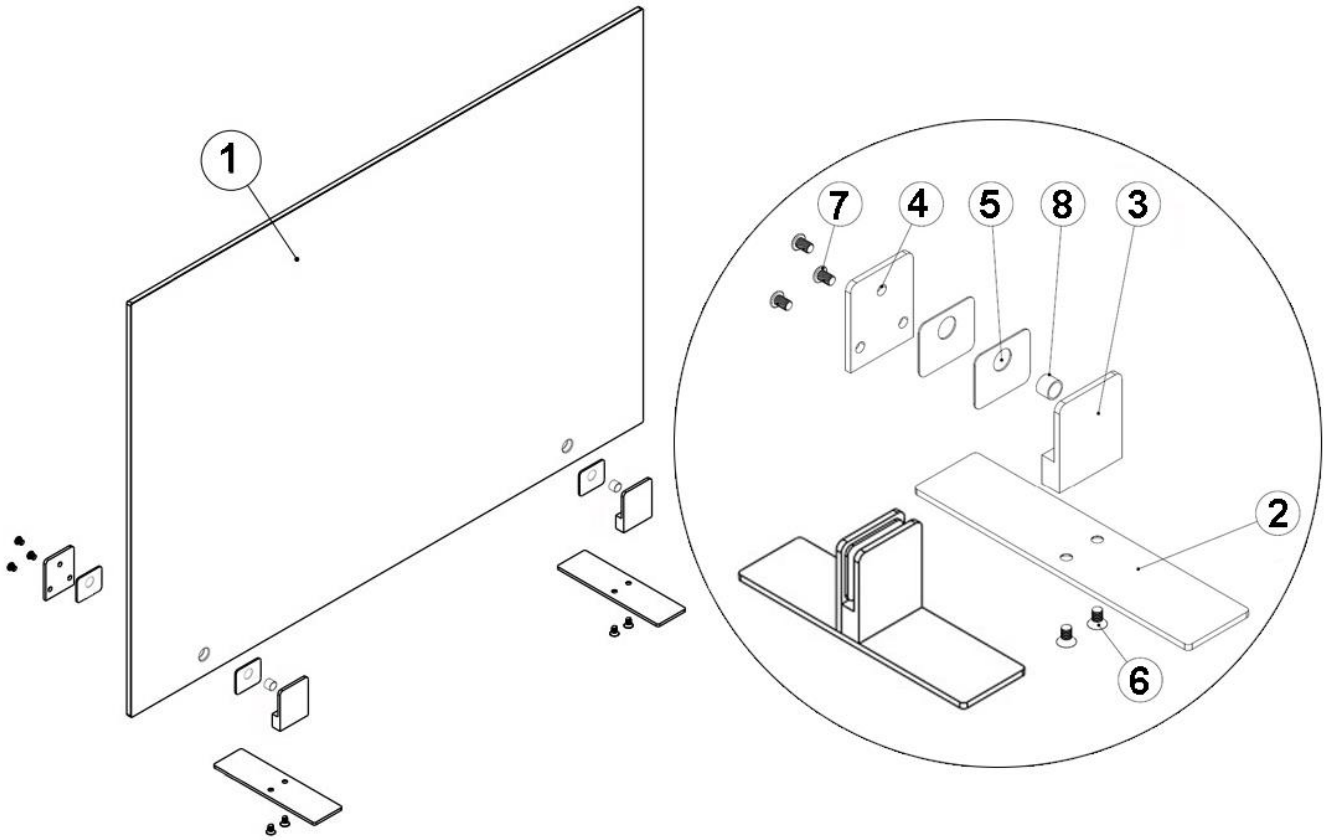

No.	1	2	3	4	5	6	7	8
Name	Glass	Base	Fixing plate	Splint	Rubber pad	Flat head screw	Round head screw	Rubber sleeve
Photo	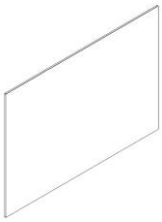	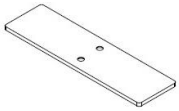	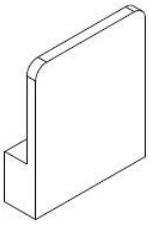	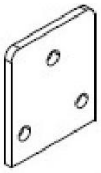				
Quantity	1pcs	2pcs	2pcs	2pcs	4pcs	4pcs	6pcs	2pcs

Warning

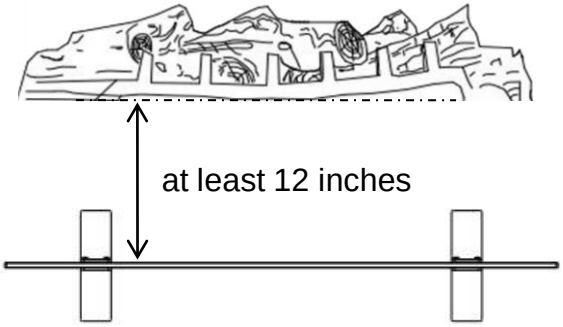

The distance from the glass shield to the flame must be greater than 12 inches.

Warning: Start using until completely cooled. Do not touch.