7 Drawer Cabinet

Assembly Instructions - Please keep for future reference

CSN131-1E4A0

CSN131-1E4B0

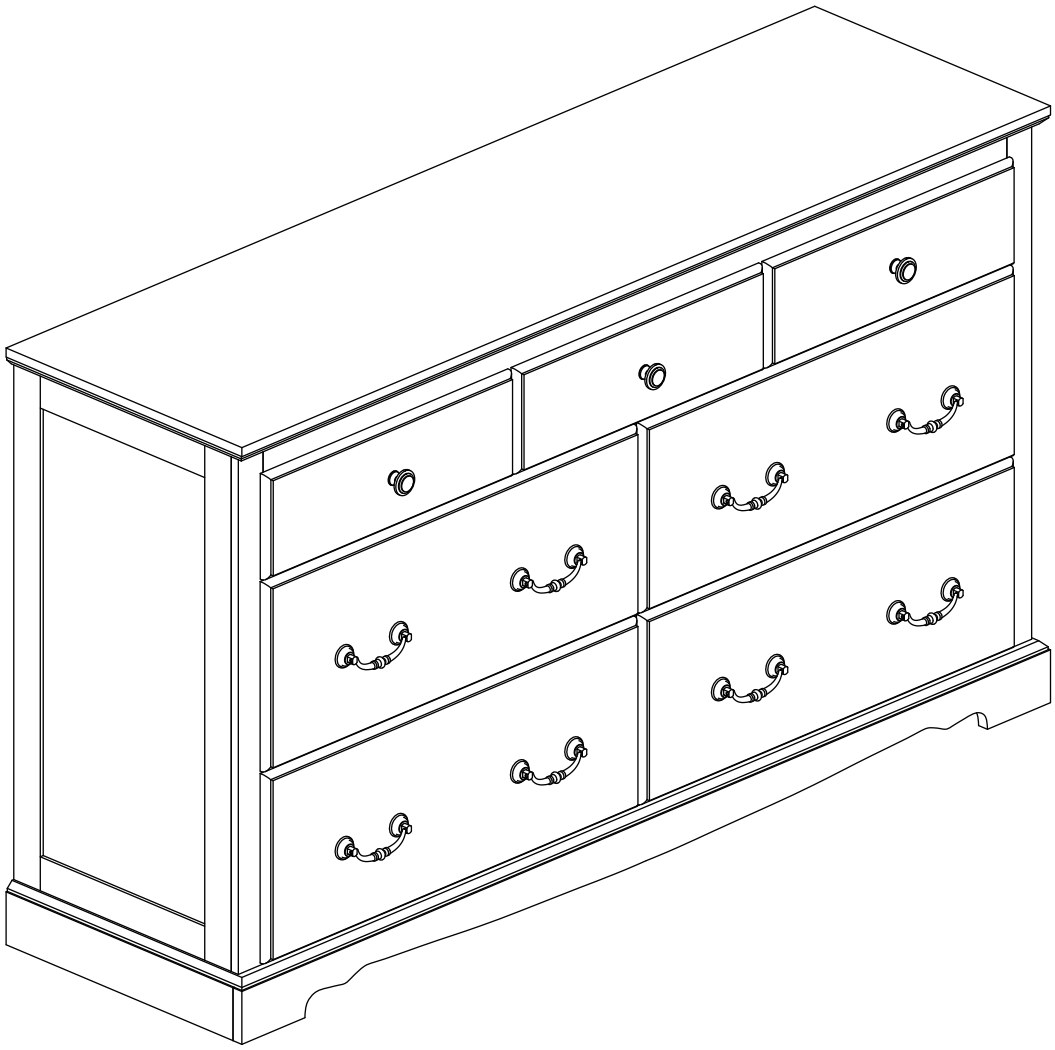

Dimensions

Width - 53.9 inch
Depth - 15.7 inch
Height - 31.3 inch

Any question please feel free to contact us:
support@amer-life.com TEL:(901) 347-2181
We will provide further assistance within 24 hours.

Important – Please read these instructions fully before starting assembly

Issue 1 -10/20/2024

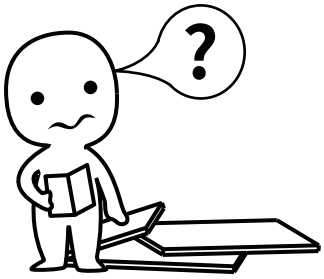

IMPORTANT INFORMATION!

please read the entire manual before starting to assemble and/or using this product.follow the manual thoroughly and keep it for further reference.

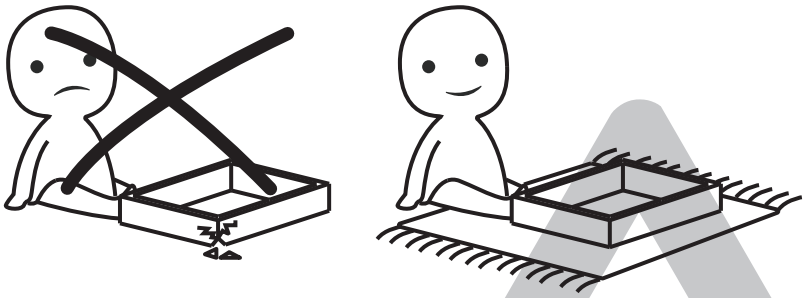

AVOID SCRATCHES!

In order to avoid scratching this furnuture should be assembled on a soft layer-could be a rug.



IMPROVE EFFICIENCY !

Try to find a partner to install with you, which can speed up the installation efficiency and shorten the time.

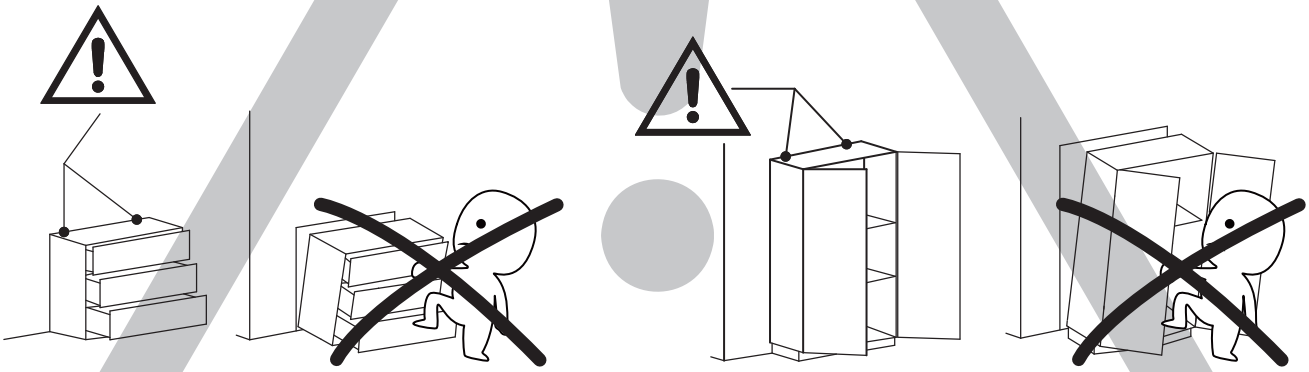

ANTI-TOPPLE WARNING !

Overturned furniture can cause serious or fatal crush injuries. To prevent tipping over, be sure to use the wall attachment, if not included with this product. Please purchase the wall attachment that fit your wall. If unsure, seek professional advice. Please read and follow each step of the instructions carefully.

Safety and Care Advice

Important – Please read these instructions fully before starting assembly

- Check you have all the components and tools listed on the following pages.
- Remove all fittings from the plastic bags and separate them into their groups.
- Keep children and animals away from the work area, small parts could choke if swallowed.
- Make sure you have enough space to layout the parts before starting.
- During assembly do not stand or put weight on the product, this could cause damage.
- Assemble the item as close to its final position (in the same room) as possible.
- Assemble on a soft level surface to avoid damaging the unit or your floor.
- Parts of the assembly will be easier with 2 people.

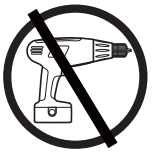

- To reduce the likelihood of damaging your product please ensure that your power drill is set on a low torque setting.

Care and maintenance

- Only clean using a damp cloth and mild detergent, do no use bleach or abrasive cleaners.
- From time to time check that there are no loose screws on this unit.
- This product should not be discarded with household waste. Take to your local authority waste disposal centre.

Handy Hints

- Assemble all parts and bolts loosely during assembly, only once the product is comKlete should you fully tighten the bolts
- Regularly check and ensure that all bolts and fittings are tightend properly .

WARNING
In order to help prevent overturning – please follow these instructions

To help prevent product toppling over please follow the below steps:-

Use the anti tip stap or wall fixing method provided (if applicable)
Do not allow children to climb or hang on the furniture
Do not open more than one drawer at a time
Do not place heavy items in the top drawers
Do not place heavy items on top of the furniture, unless the furniture has been designed for this purpose

Please note that only the anti tip strap is provided.
You will need to provide wall plugs and screws applicable for your wall type

Componets - Panels

Please check you have all the panels listed below

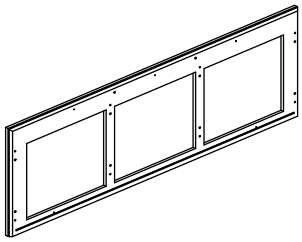

1 (1372*400*24mm x1)

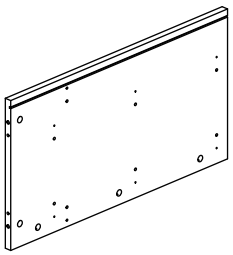

2 (694*369*17mm x1)

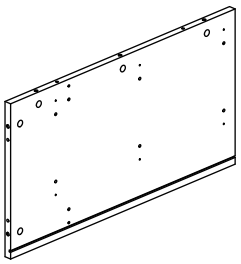

3 (694*369*17mm x1)

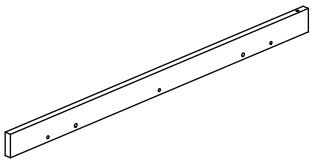

4 (684*42*12mm x1)

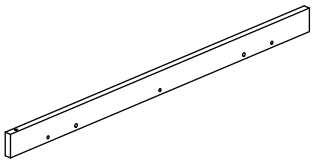

5 (684*42*12mm x1)

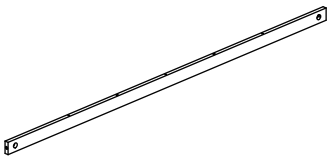

6 (1262*38*12mm x1)

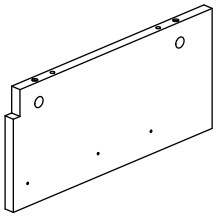

7 (361*170*15mm x2)

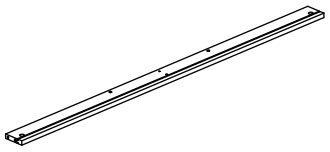

8 (1310*70*15mm x1)

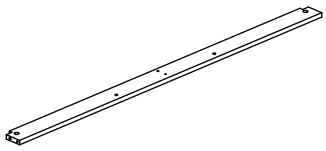

9 (1310*70*15mm x1)

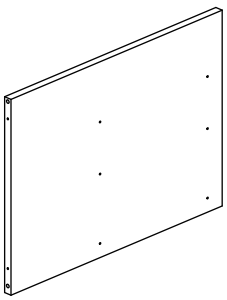

10 (500*361*15mm x1)

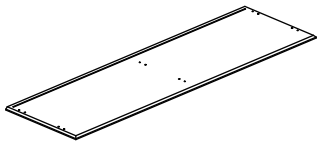

11 (1368*398*12mm x1)

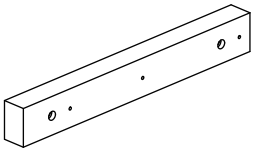

12 (300*40*25mm x6)

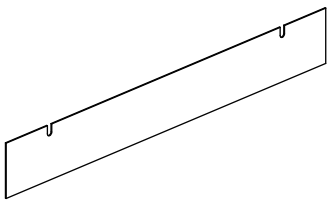

13 (1318*178*3mm x1)

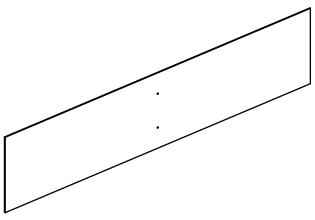

14 (1318*254*3mm x2)

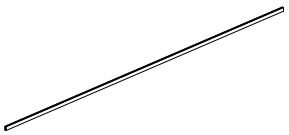

15 (1308*12*6mm x1)

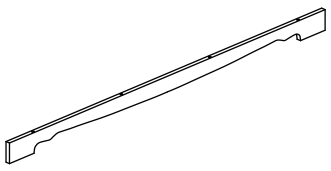

16 (1372*70*15mm x1)

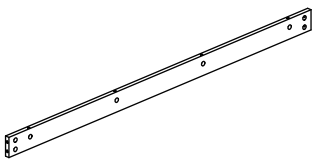

17 (1342*70*15mm x1)

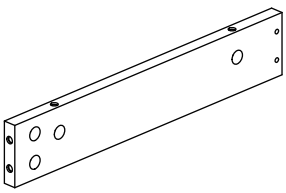

18 (385*70*15mm x1)

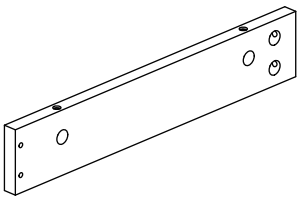

19 (385*70*15mm x1)

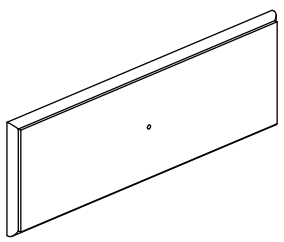

20 (420*140*15mm x3)

Componets - Panels

Please check you have all the panels listed below

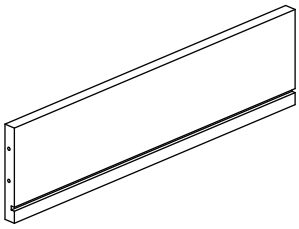

21 (359*95*12mm x3)

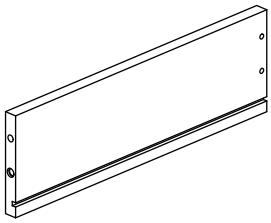

22 (300*95*12mm x3)

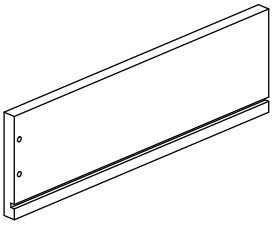

23 (300*95*12mm x3)

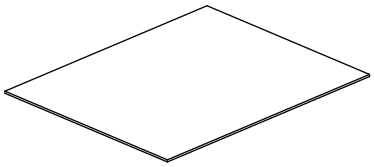

24 (367*295*3mm x3)

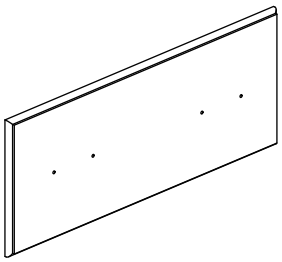

25 (633*251*15mm x4)

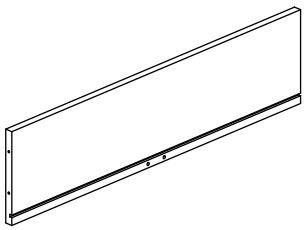

26 (572*145*12mm x4)

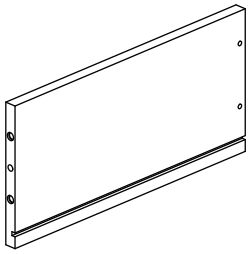

27 (300*145*12mm x4)

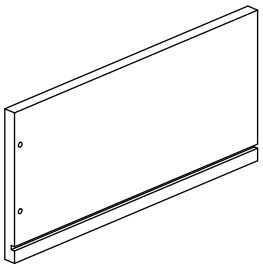

28 (300*145*12mm x4)

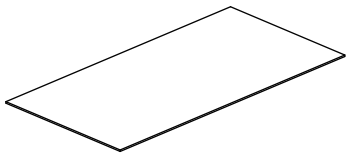

29 (580*295*3mm x4)

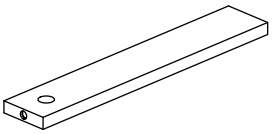

30 (287*50*12mm x4)

Componets - Fittings

Please check you have all the fittings listed below

Note: The quantities below are the correct amount to complete the assembly. In some cases more fittings may be supplied are required.

A  6*30mm Wooden Dowel x 56	B 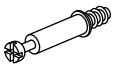 6*35mm Cam Bolt x 66	C  Cam Lock x 66
D  4*12mm Screw x 4	E  3*12mm Screw x 84	F 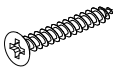 4*30mm Screw x 12
G 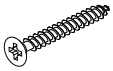 4*35mm Screw x 42	H 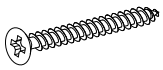 4*40mm Screw x 9	I  x 8
J  x 3	K  4*18mm bolt x 19	L 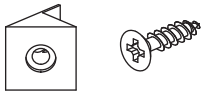 x 20
M 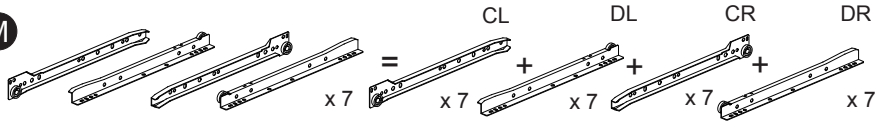		N 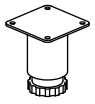 x 1
O 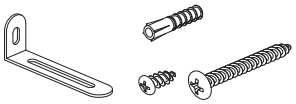 x 2	P  3*12mm Screw x 4	

Tools required

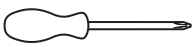

Phllips screwdriver
(medium & large)

Ruler - Use this ruler to help correctly identify the screws

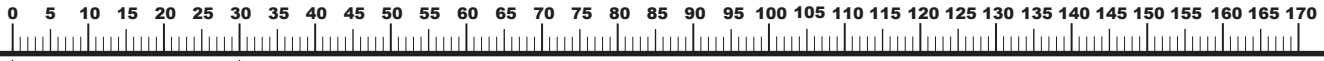

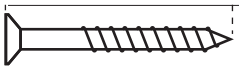

The screws length is measured from the head to the point (30mm screw shown).

Using Camlocks

Step 1

Connect the male camlock as directed in the assembly instructions using a screwdriver.

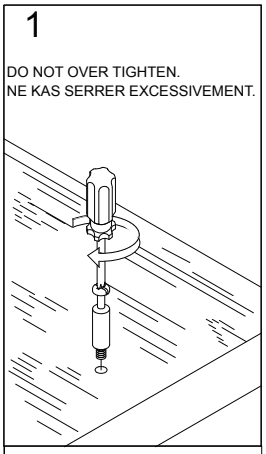

Step 2

Push the male camlock into the entry hole.

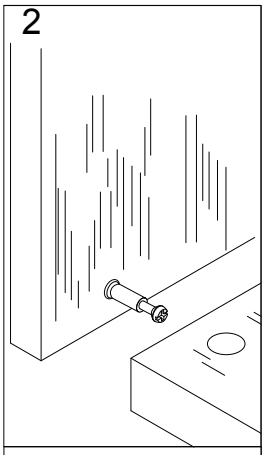

Step 3

Insert the female camlock as shown in the instructions.

Note: ensure that the arrow on the top of the camlock points towards the entry hole for the male camlock.

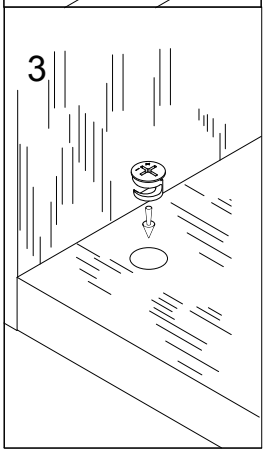

Step 4

Turn the female camlock clockwise with a screwdriver.

You should feel a click when the camlock is locked in place.

The joint is now secure.

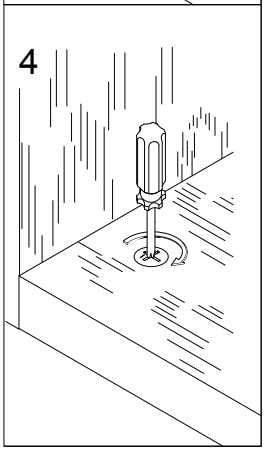

Assembly Instructions

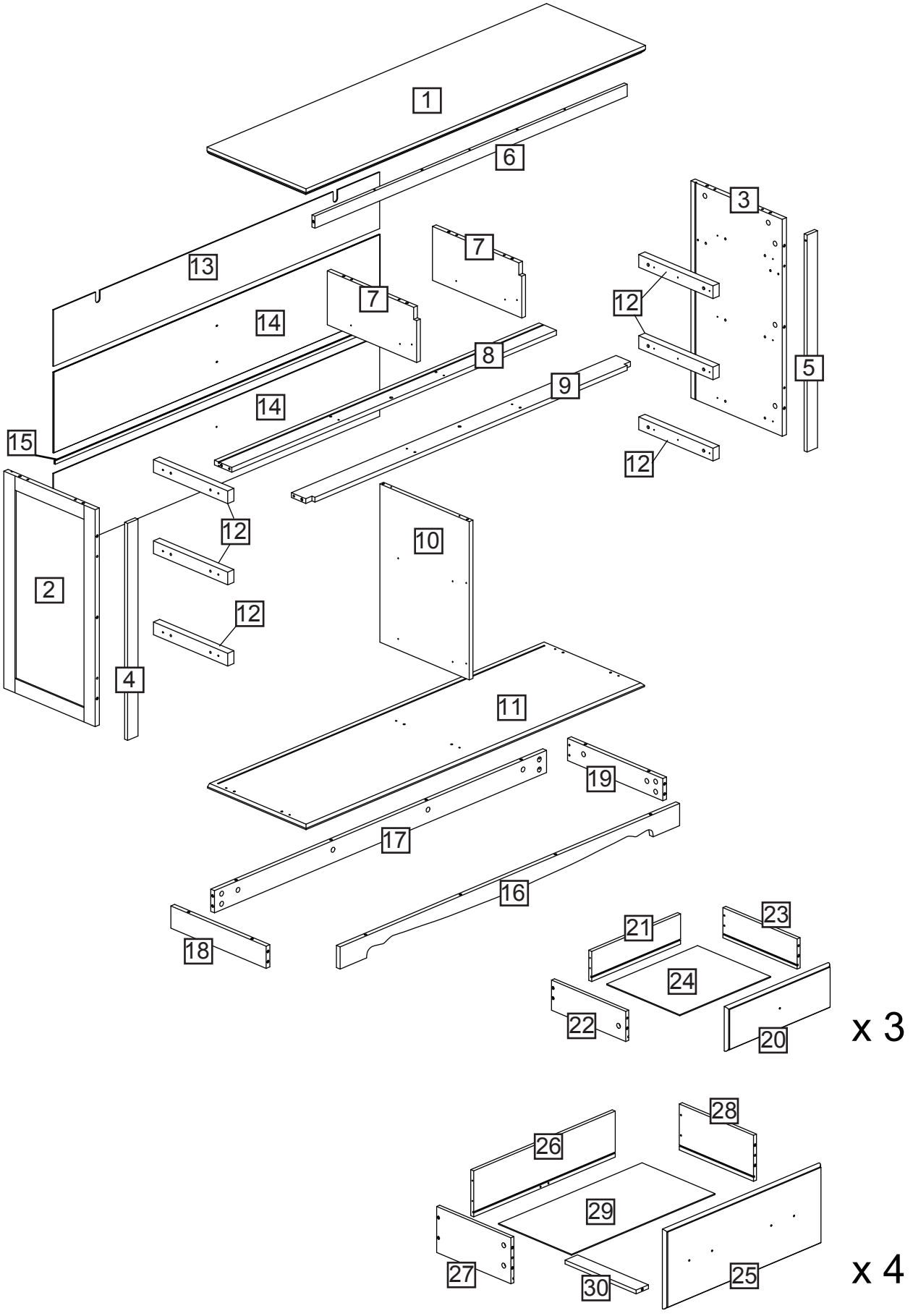

Assembly Instructions

Step 1

CAM-LOCK
Tighten until shoulder is flush
with panel.Do not overtighten
or undertighten(see example below)

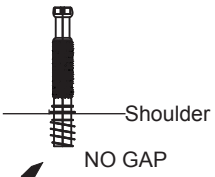

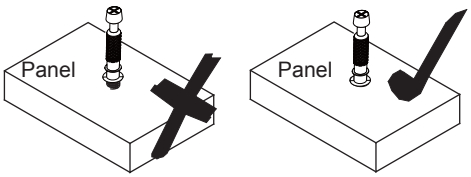

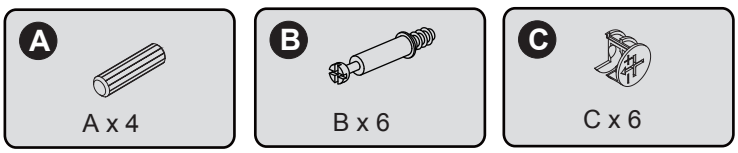

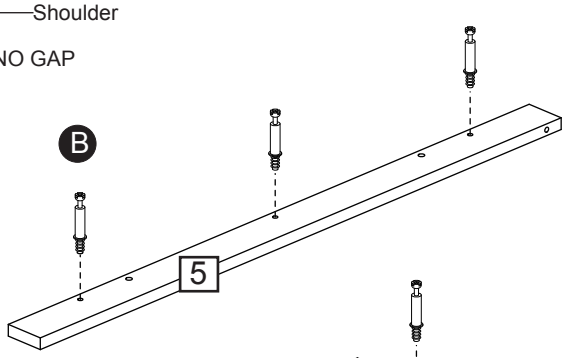

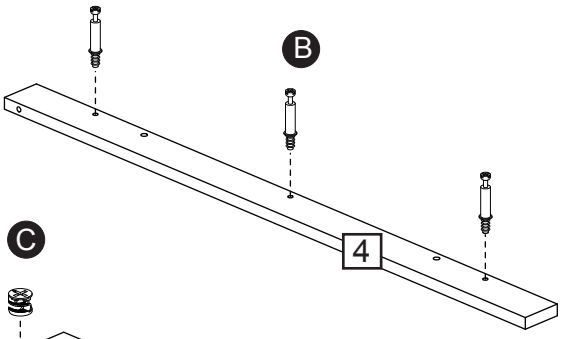

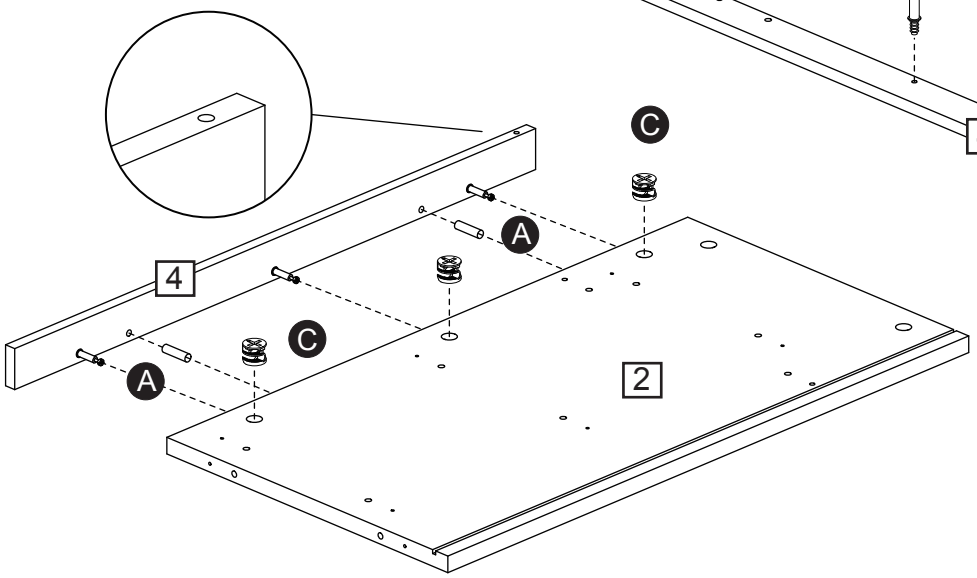

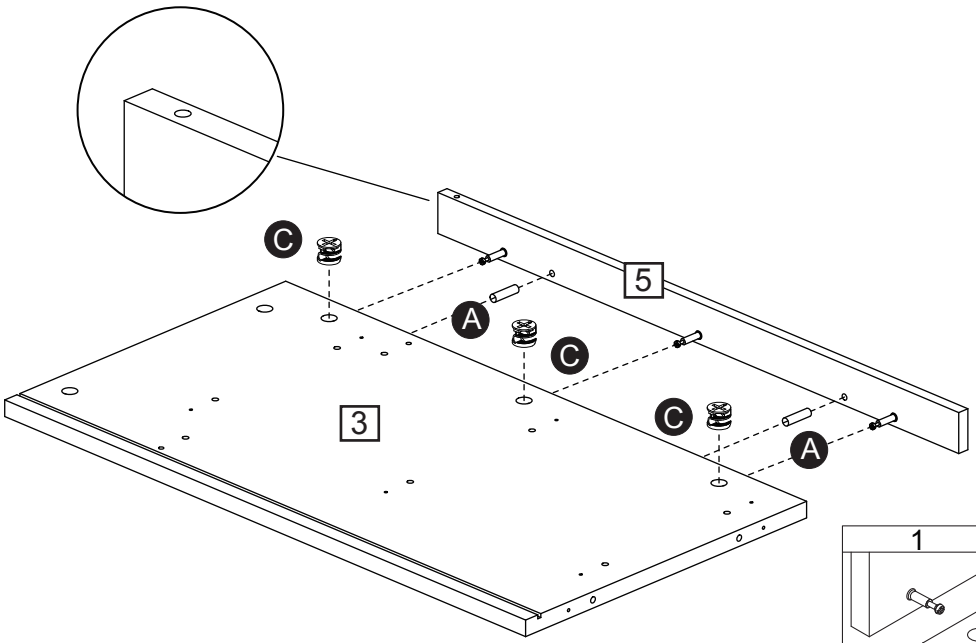

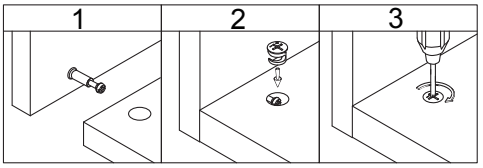

Assembly Instructions

Step 2

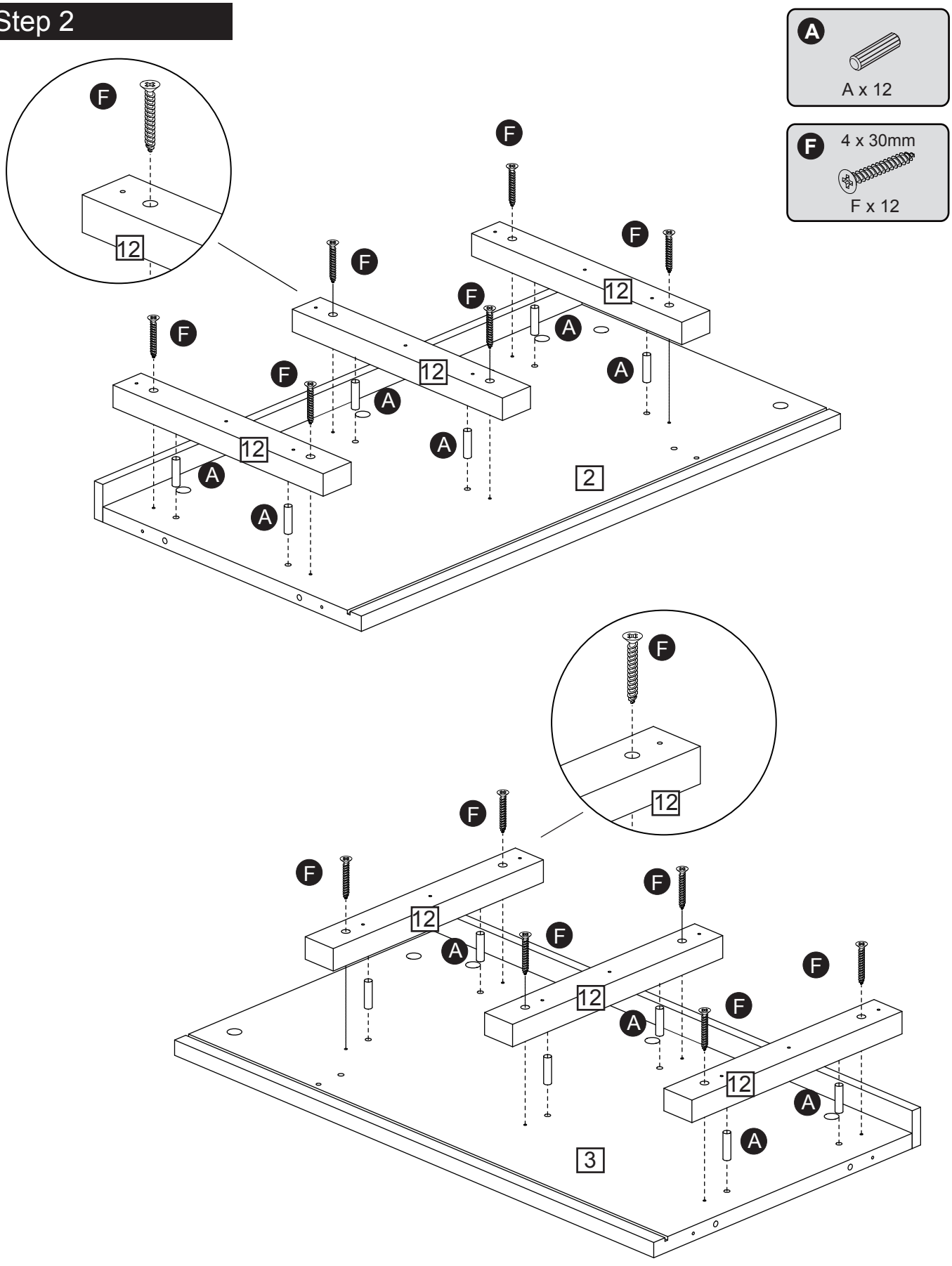

Assembly Instructions

Step 3

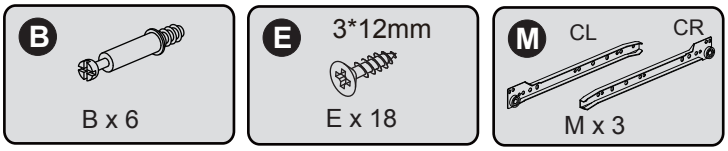

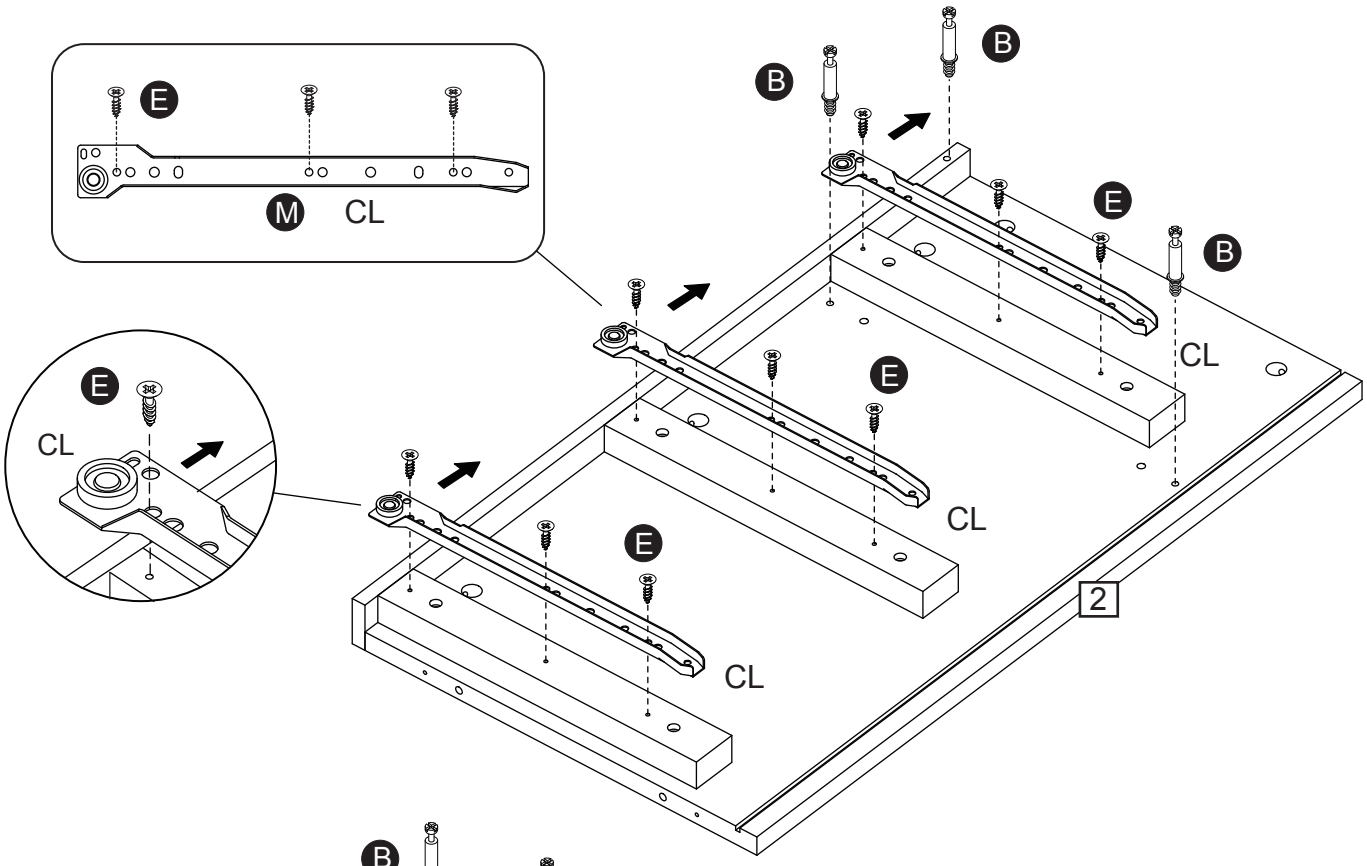

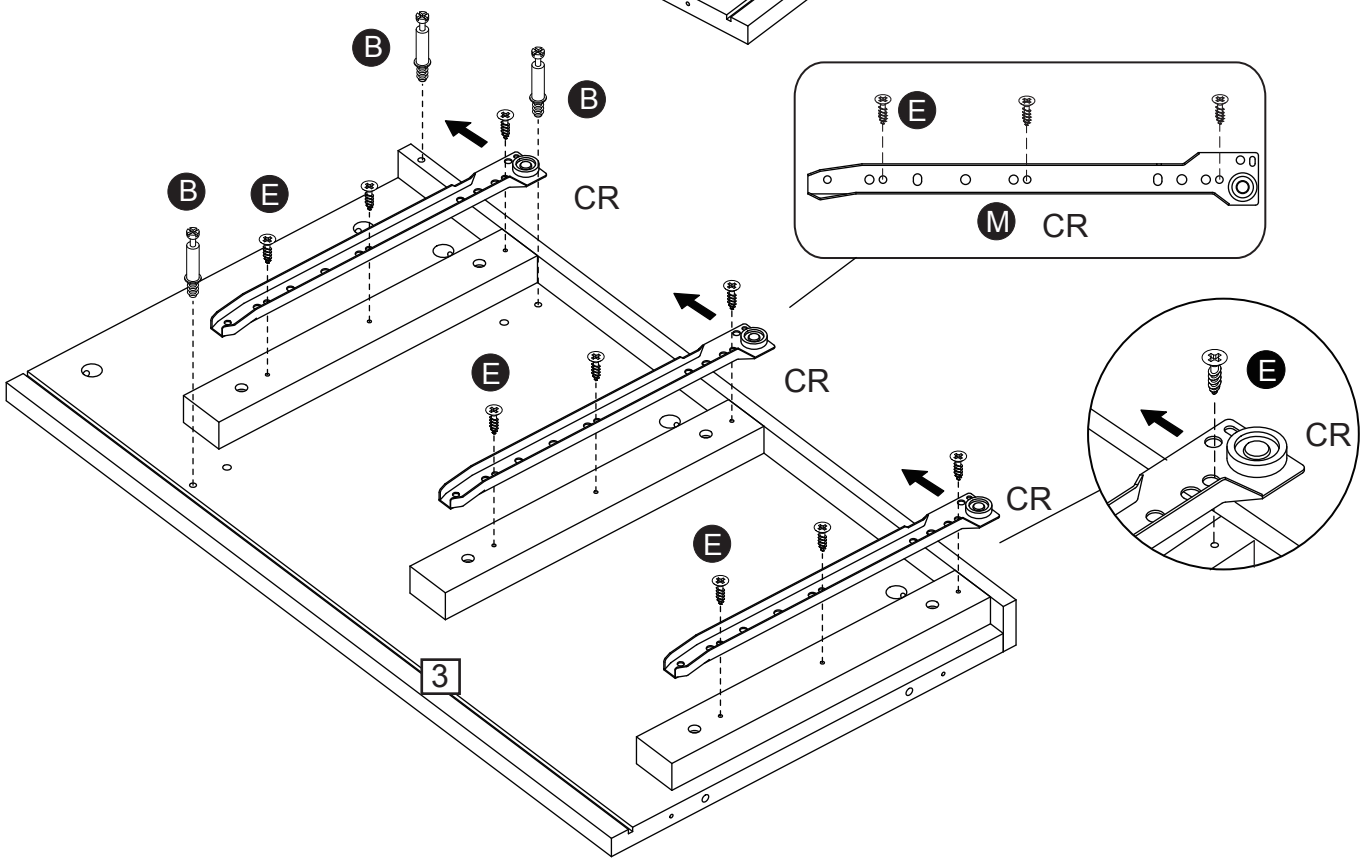

Assembly Instructions

Step 4

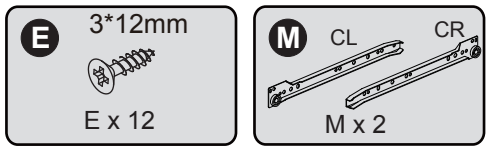

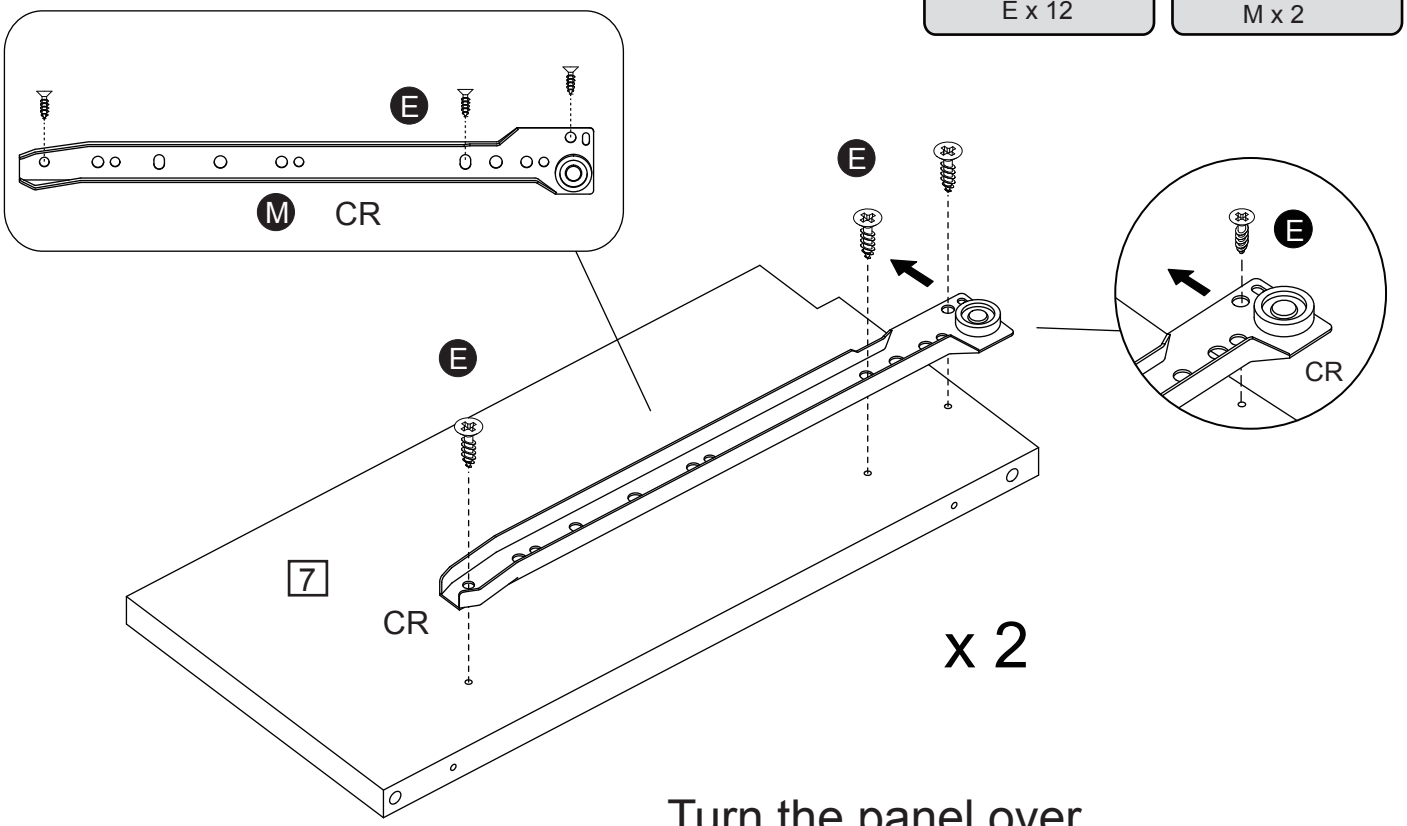

Turn the panel over

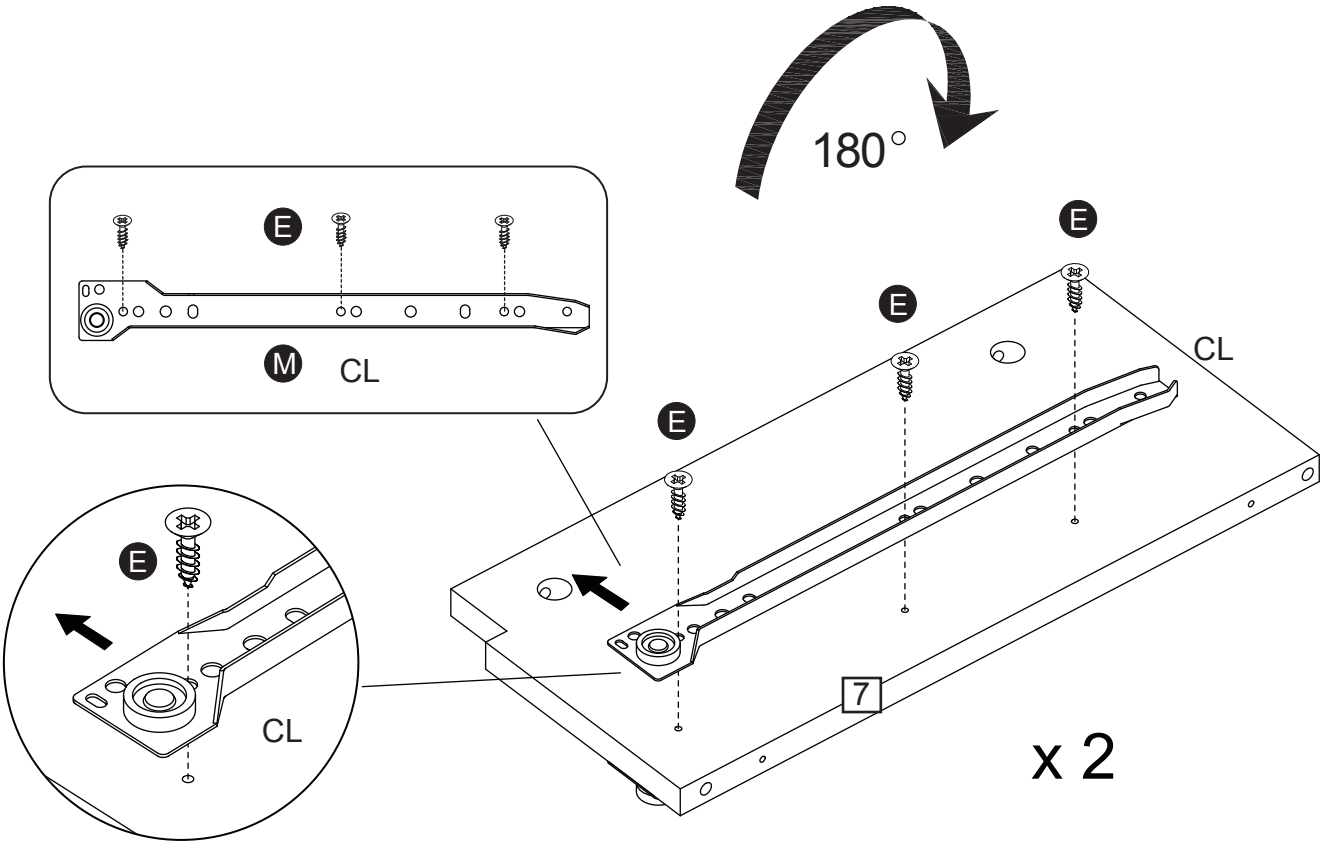

Assembly Instructions

Step 5

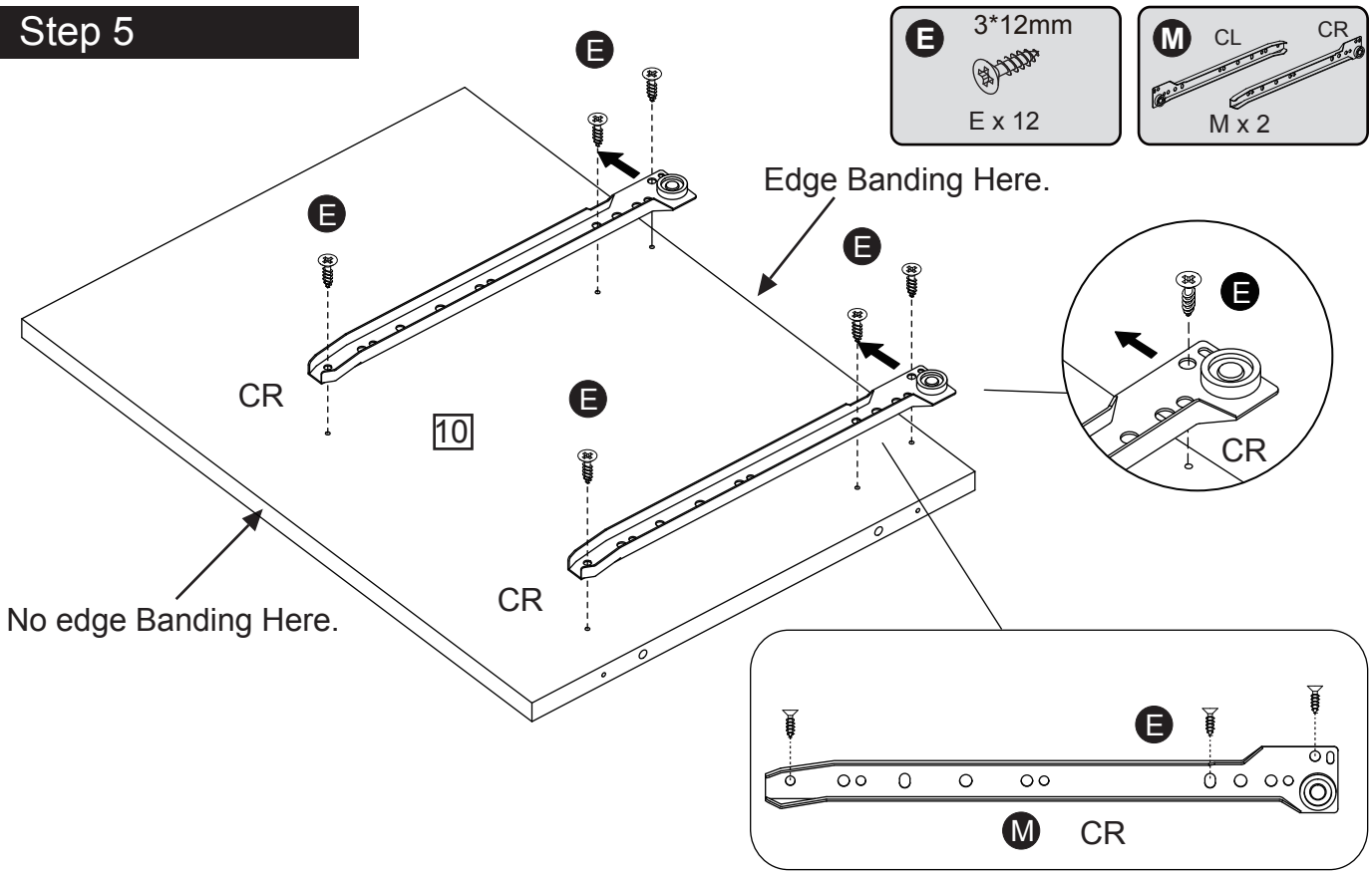

Turn the panel over

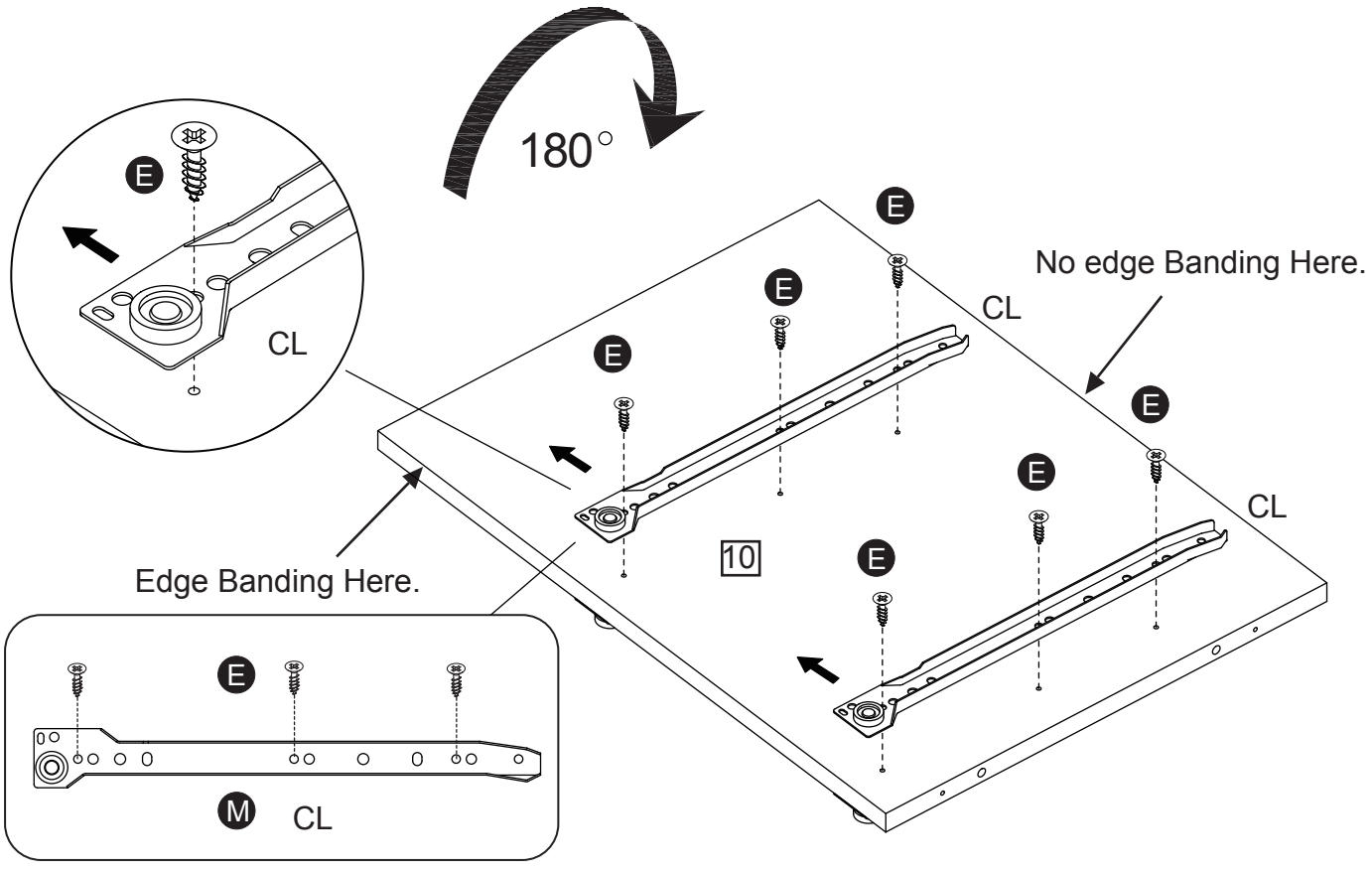

Assembly Instructions

Step 6

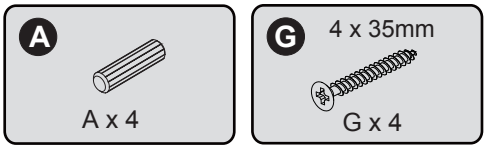

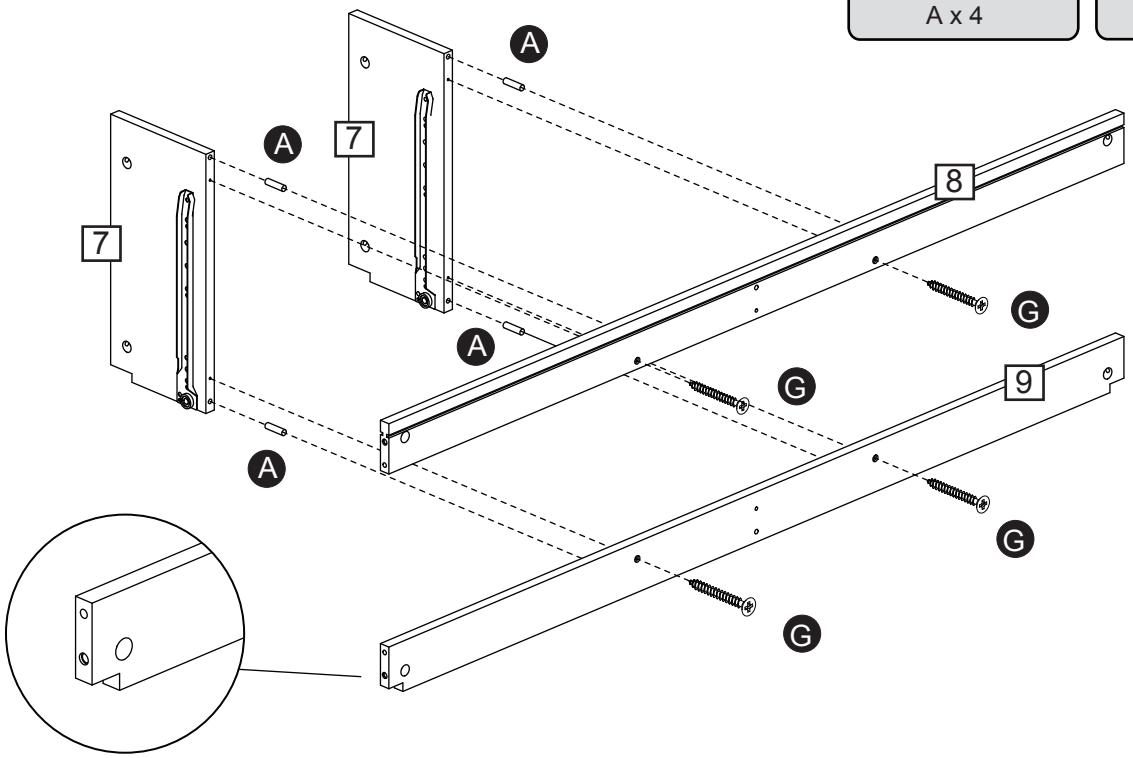

Step 7

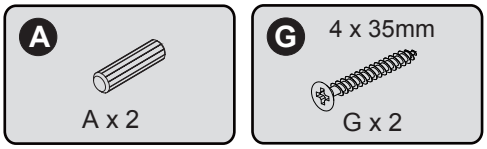

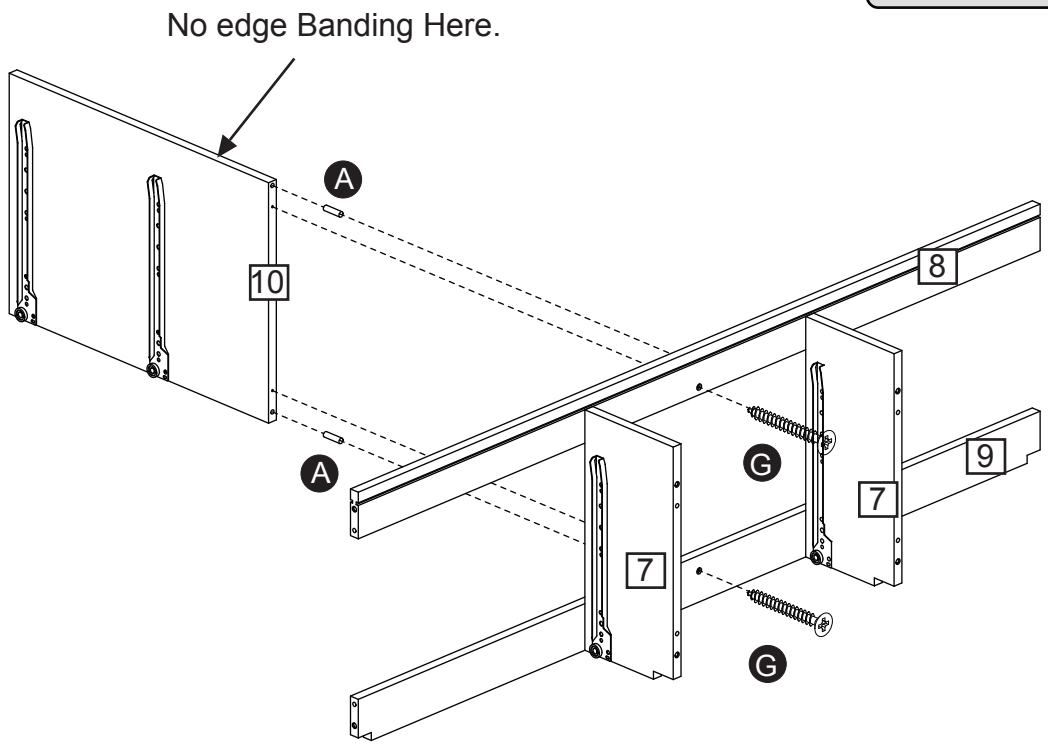

Assembly Instructions

Step 8

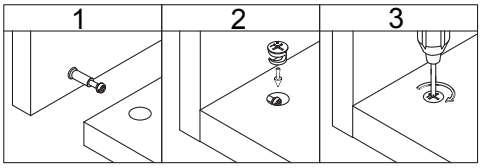

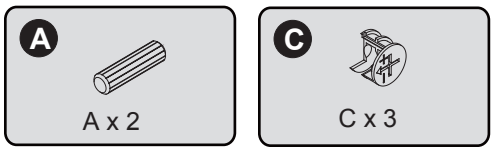

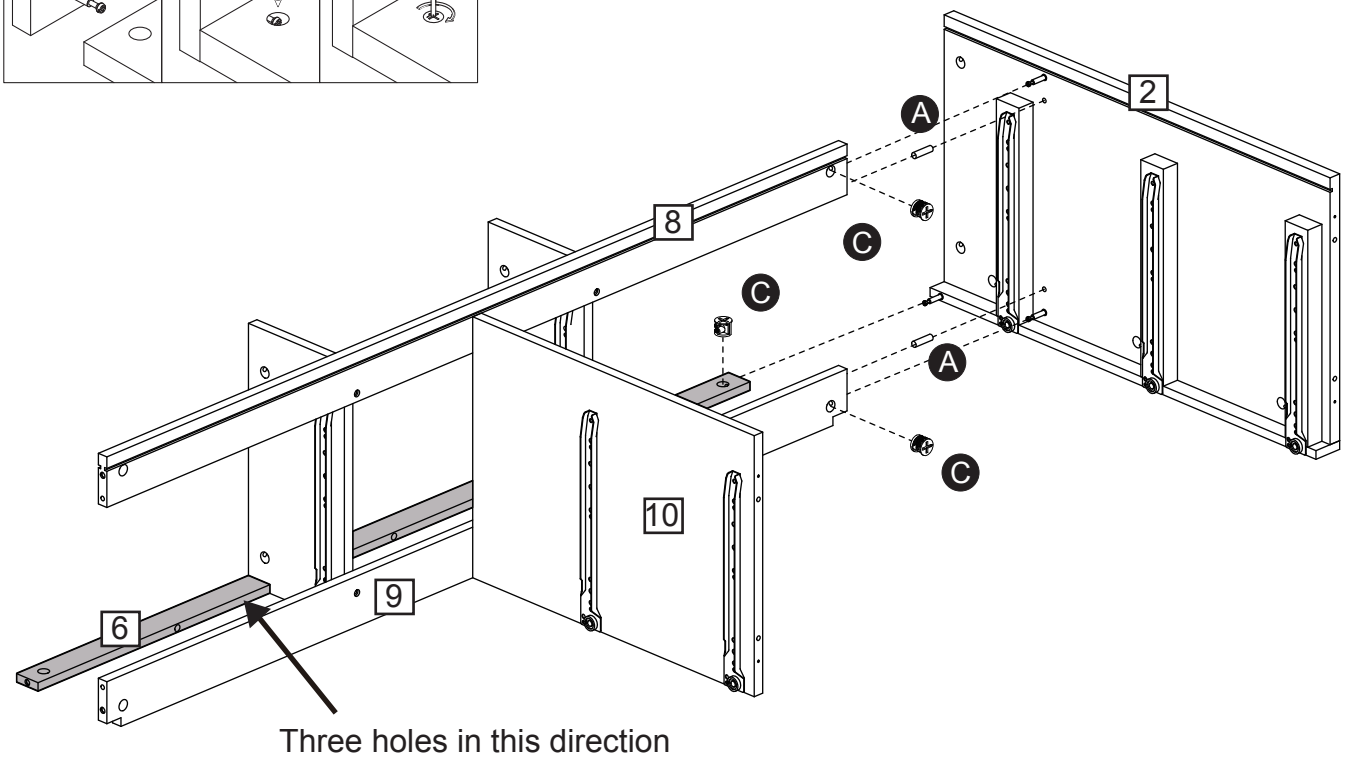

Three holes in this direction

Step 9

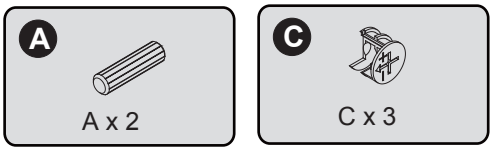

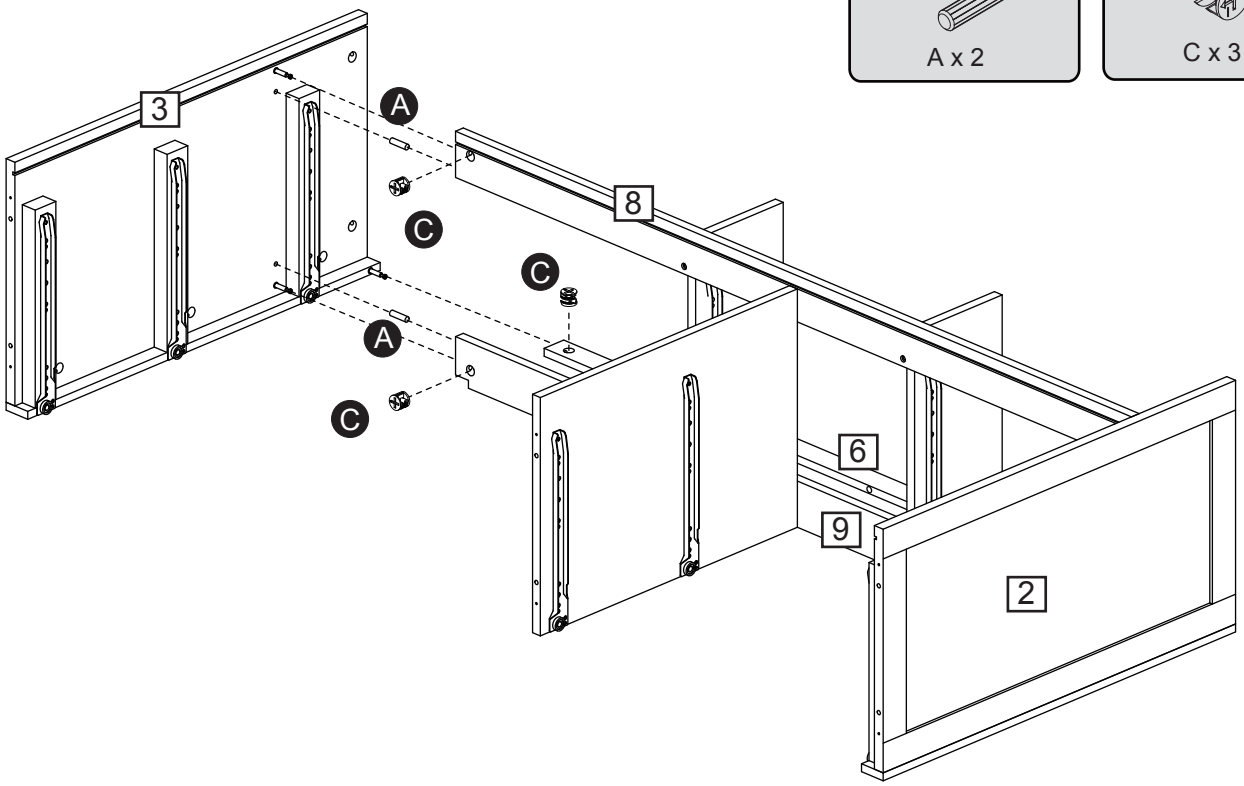

Assembly Instructions

Step 10

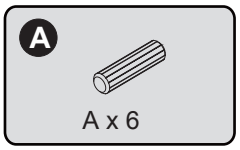

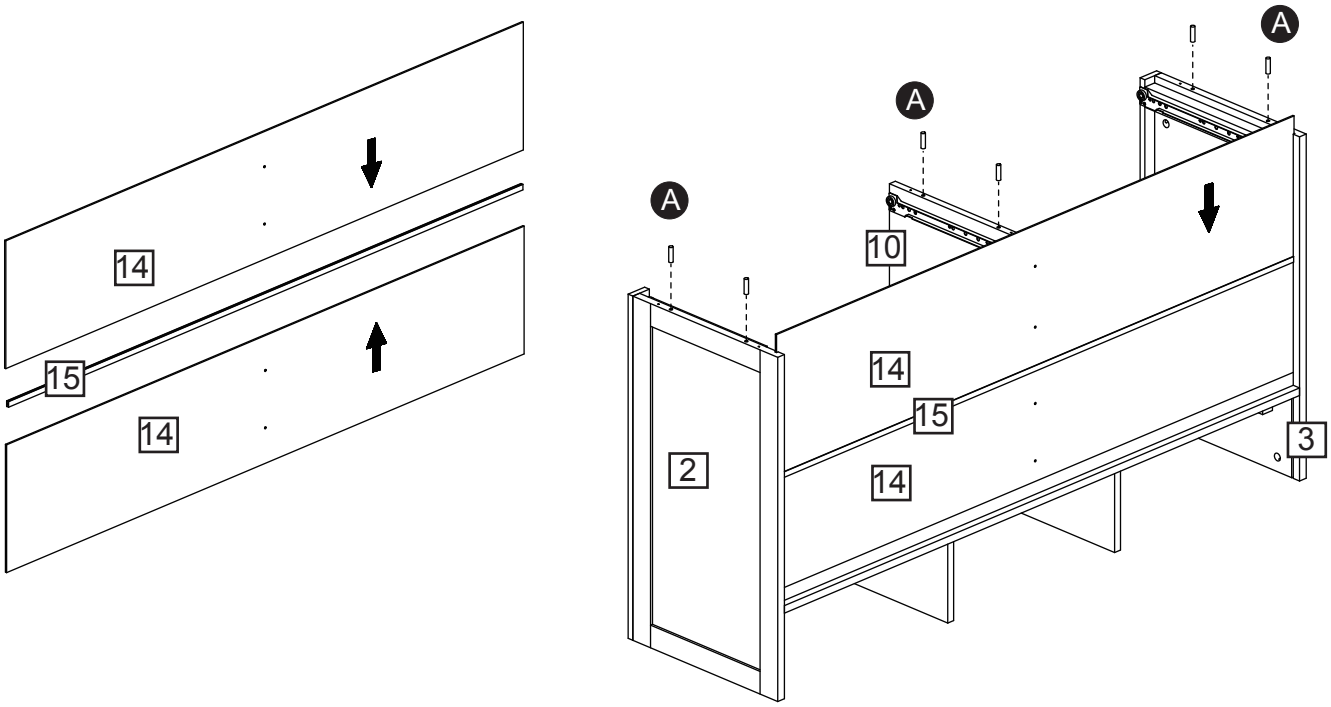

Step 11

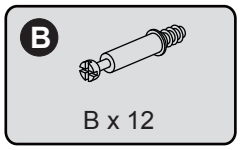

CAM-LOCK
Tighten until shoulder is flush
with panel.Do not overtighten
or undertighten(see example below)

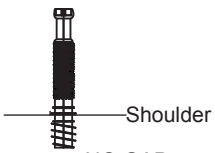

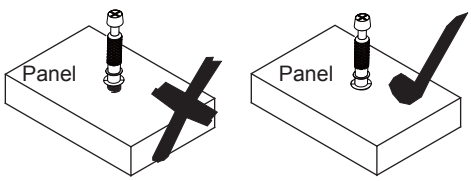

Assembly Instructions

Step 12

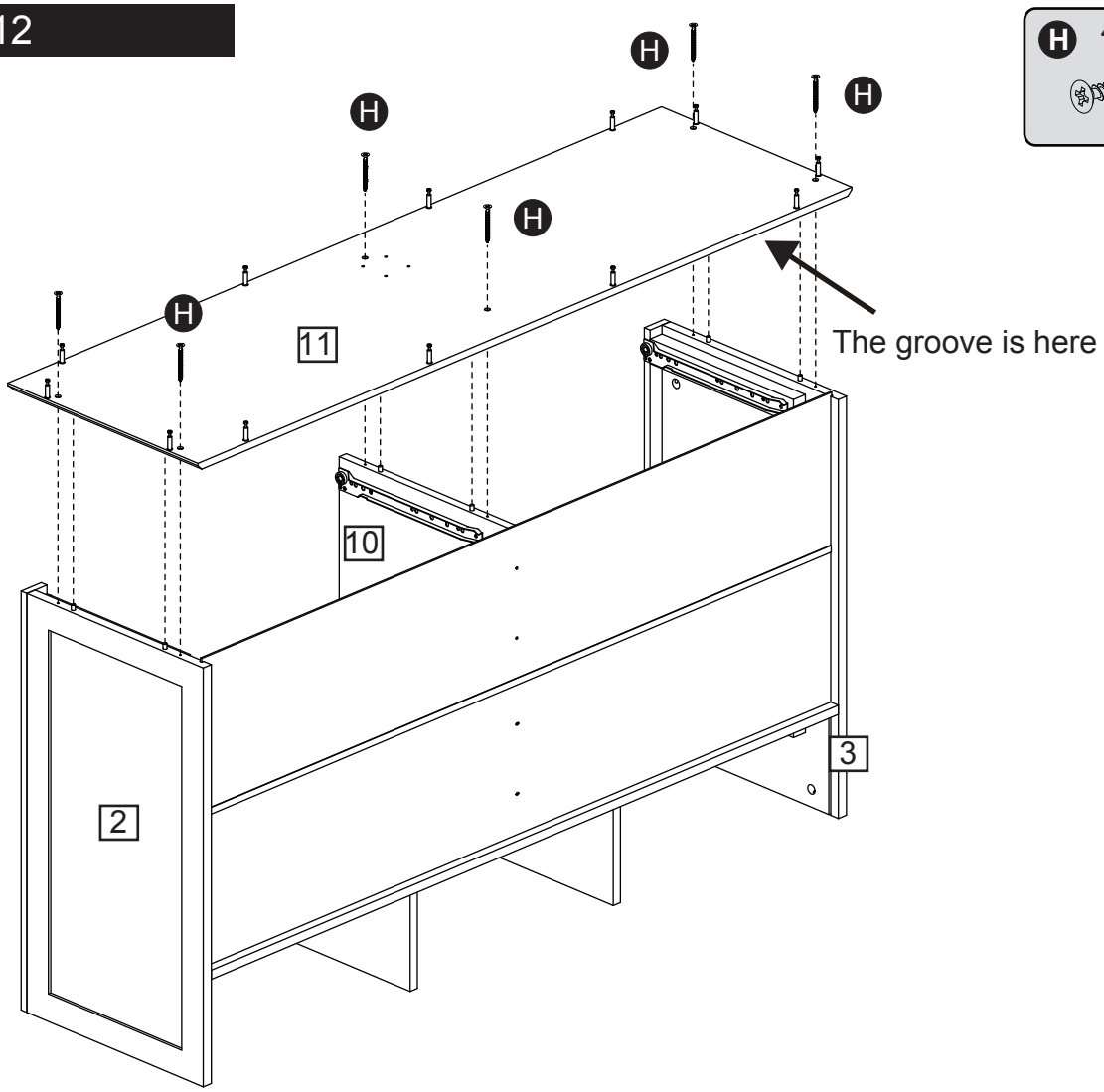

Step 13

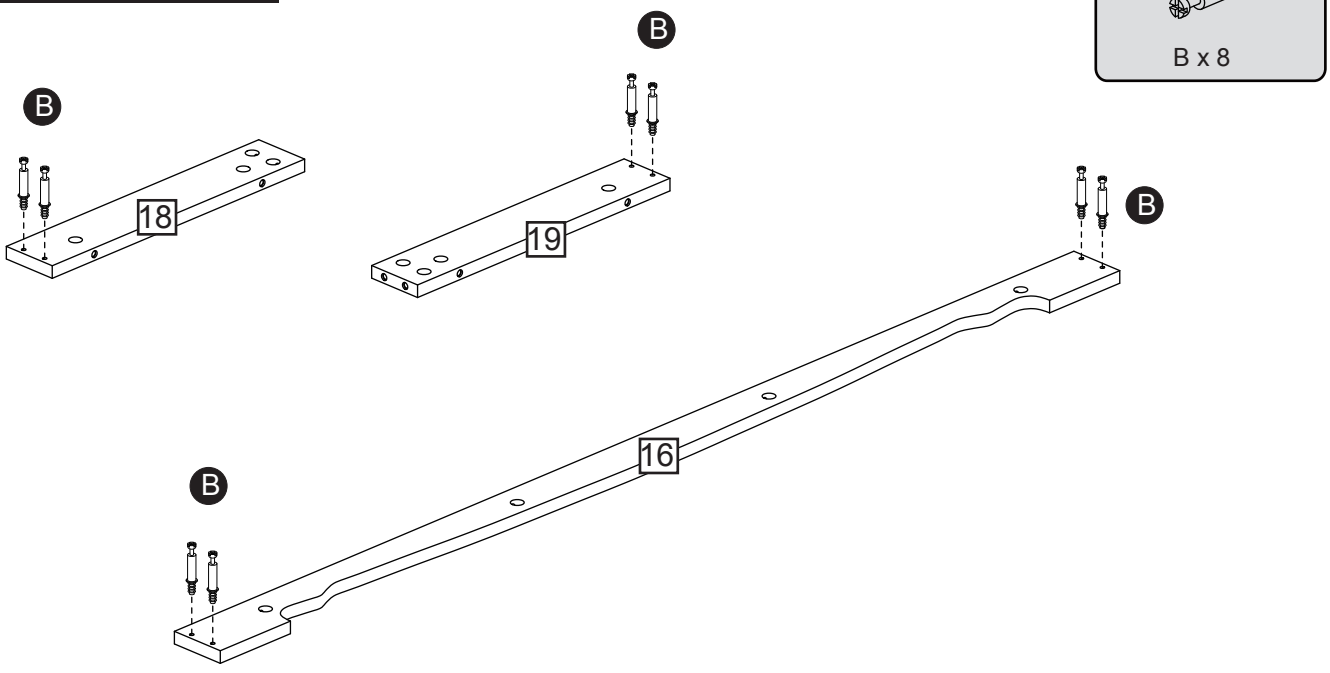

Assembly Instructions

Step 14

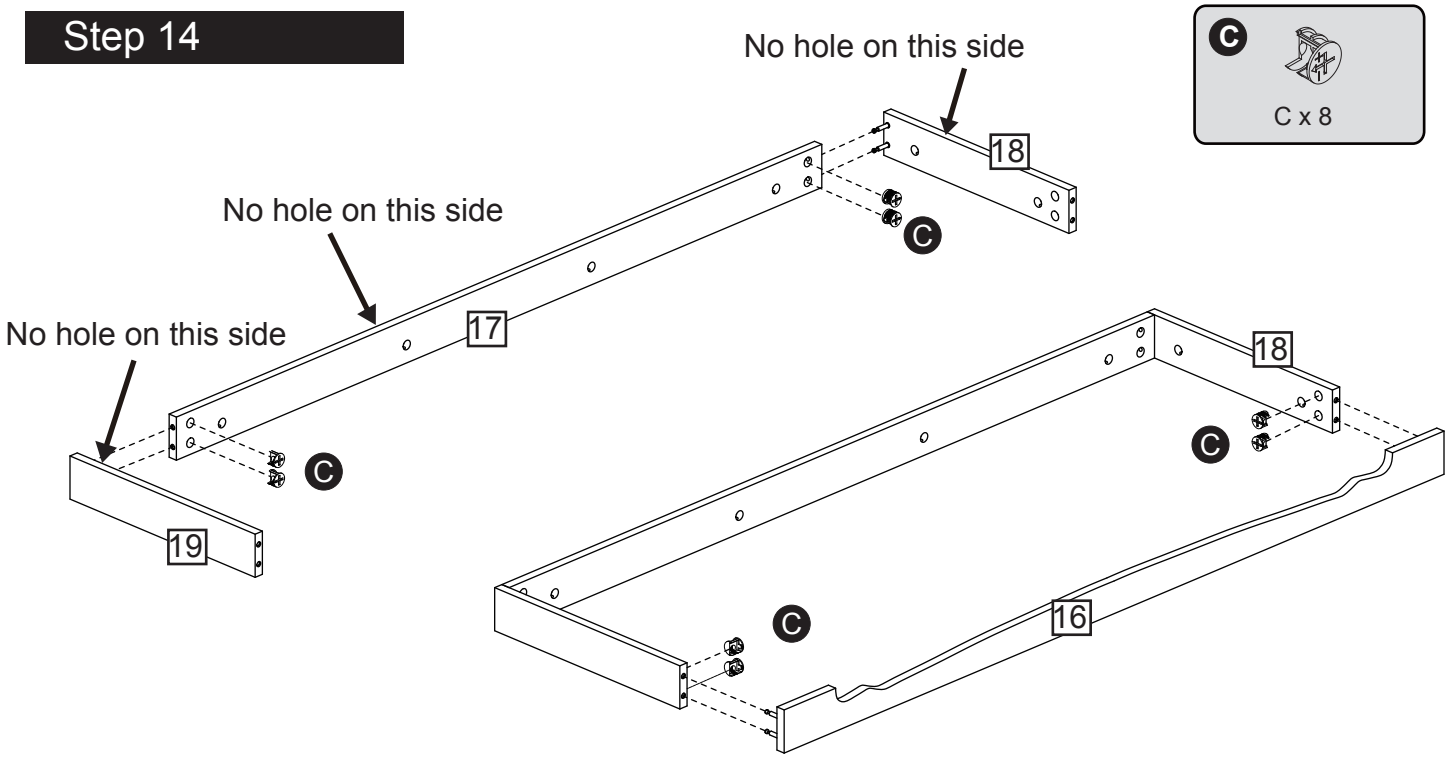

C x 8

Step 15

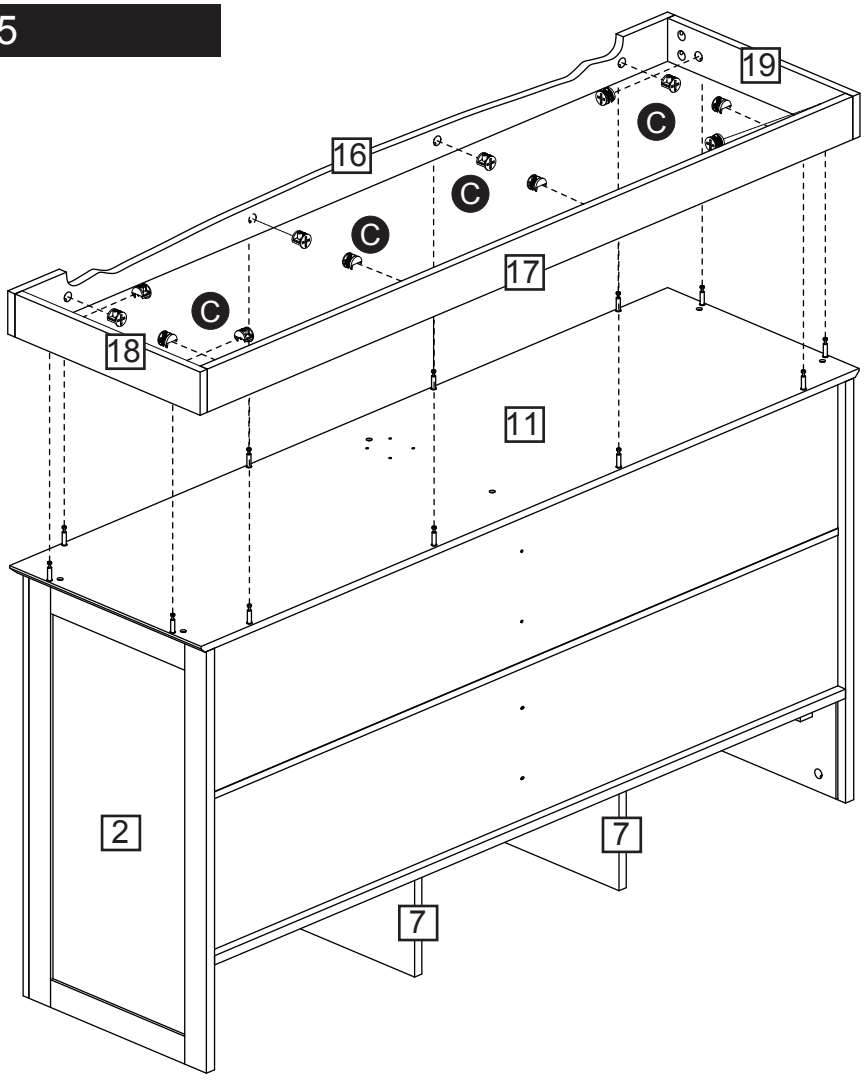

C x 12

Assembly Instructions

Step 16

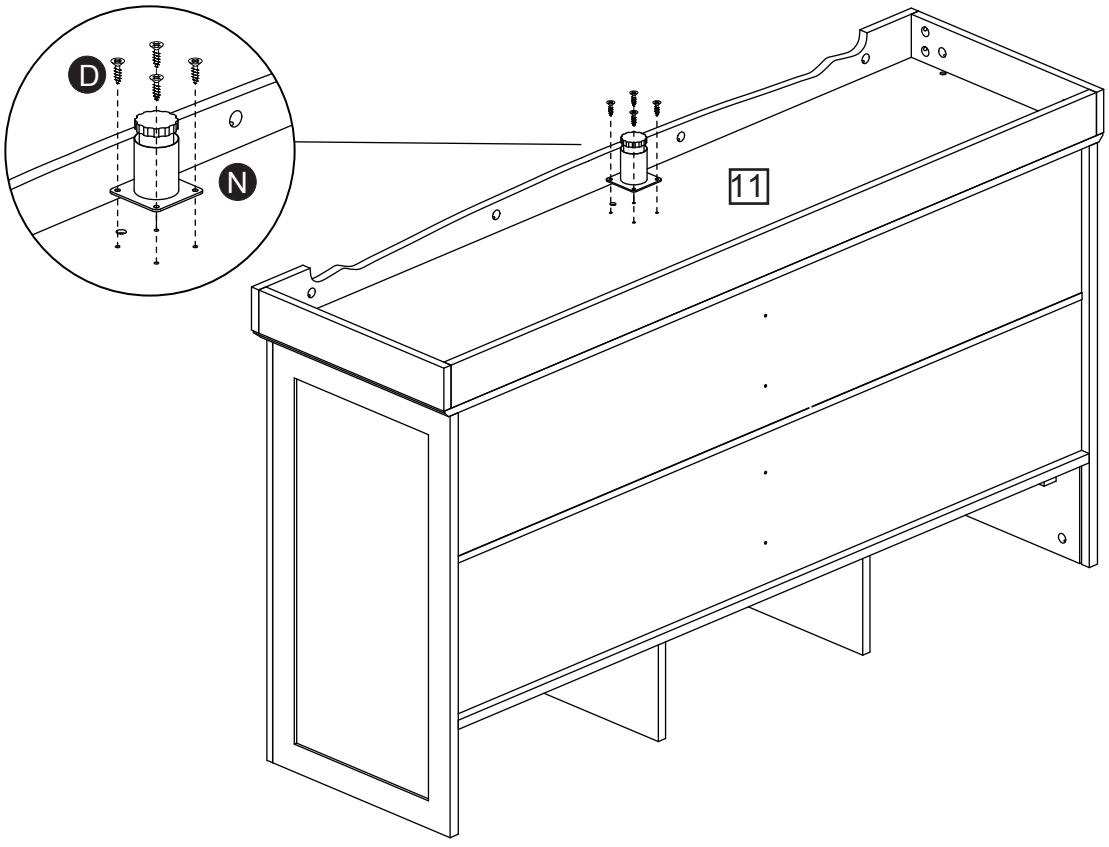

D
4*12mm
D x 4

N
N x 1

Step 17

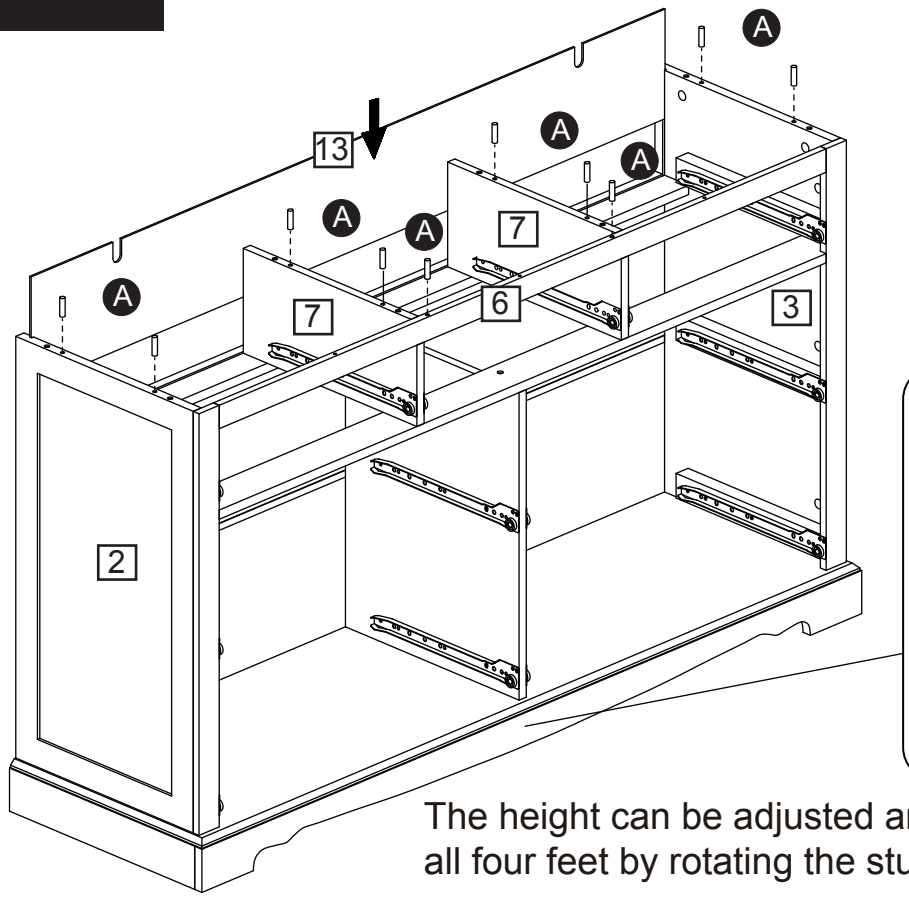

A
A x 10

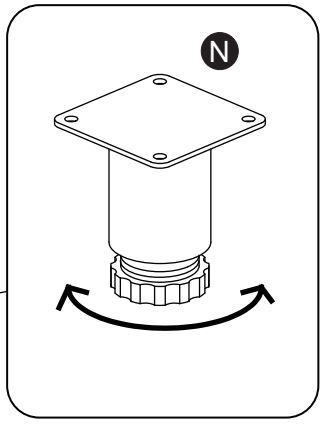

The height can be adjusted and balanced with all four feet by rotating the studs.

Assembly Instructions

Step 18

Do not fully tighten wall fixing brackets until it's ready to be fixed to the wall.

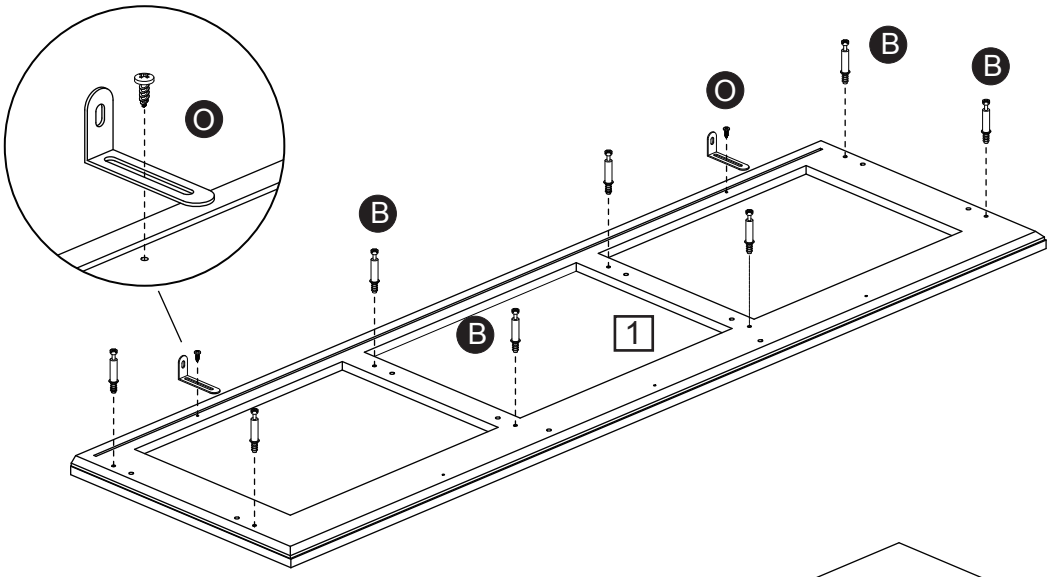

B x 8

C x 8

H 4 x 40mm

H x 3

O x 2

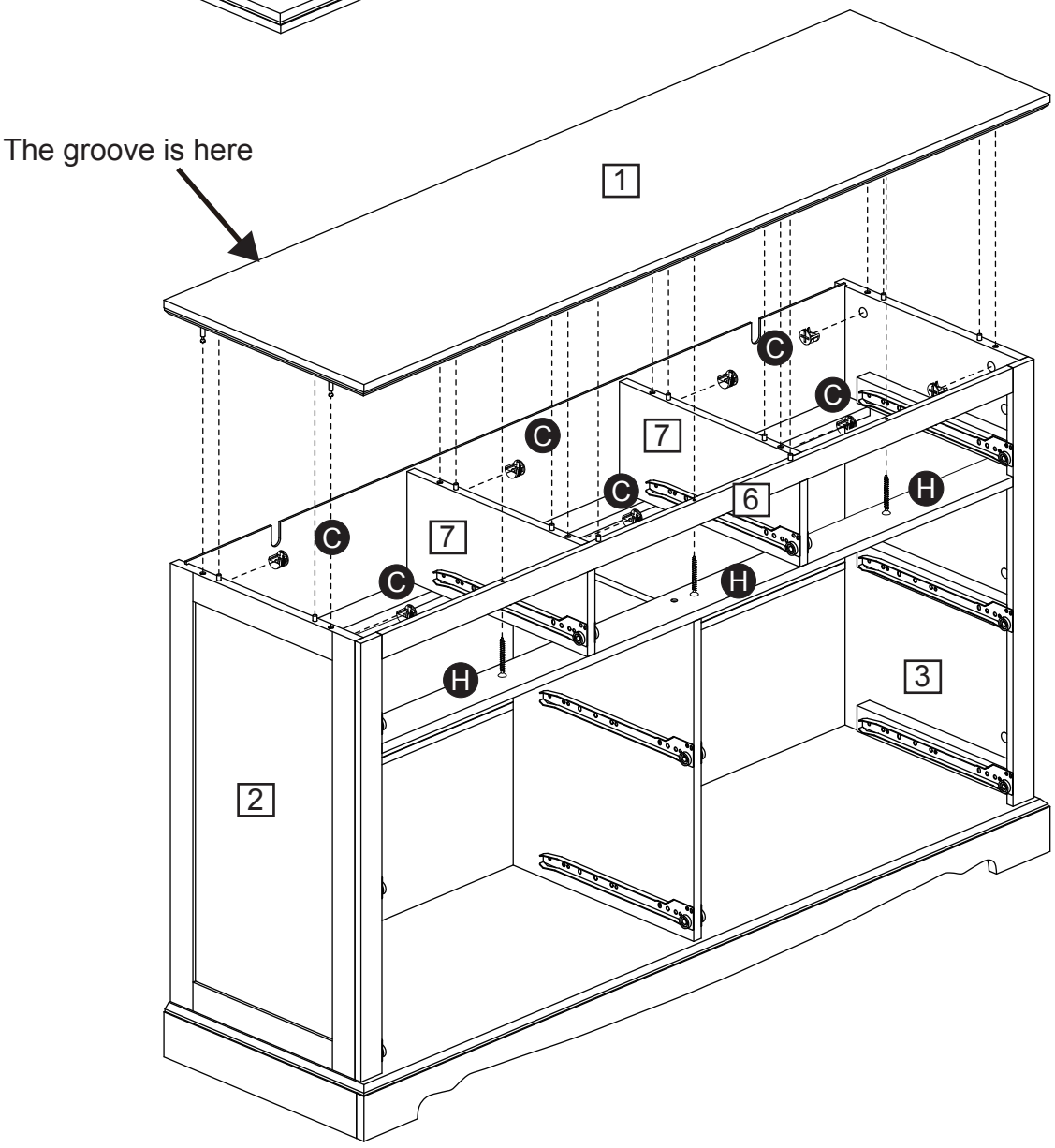

Assembly Instructions

Step 19

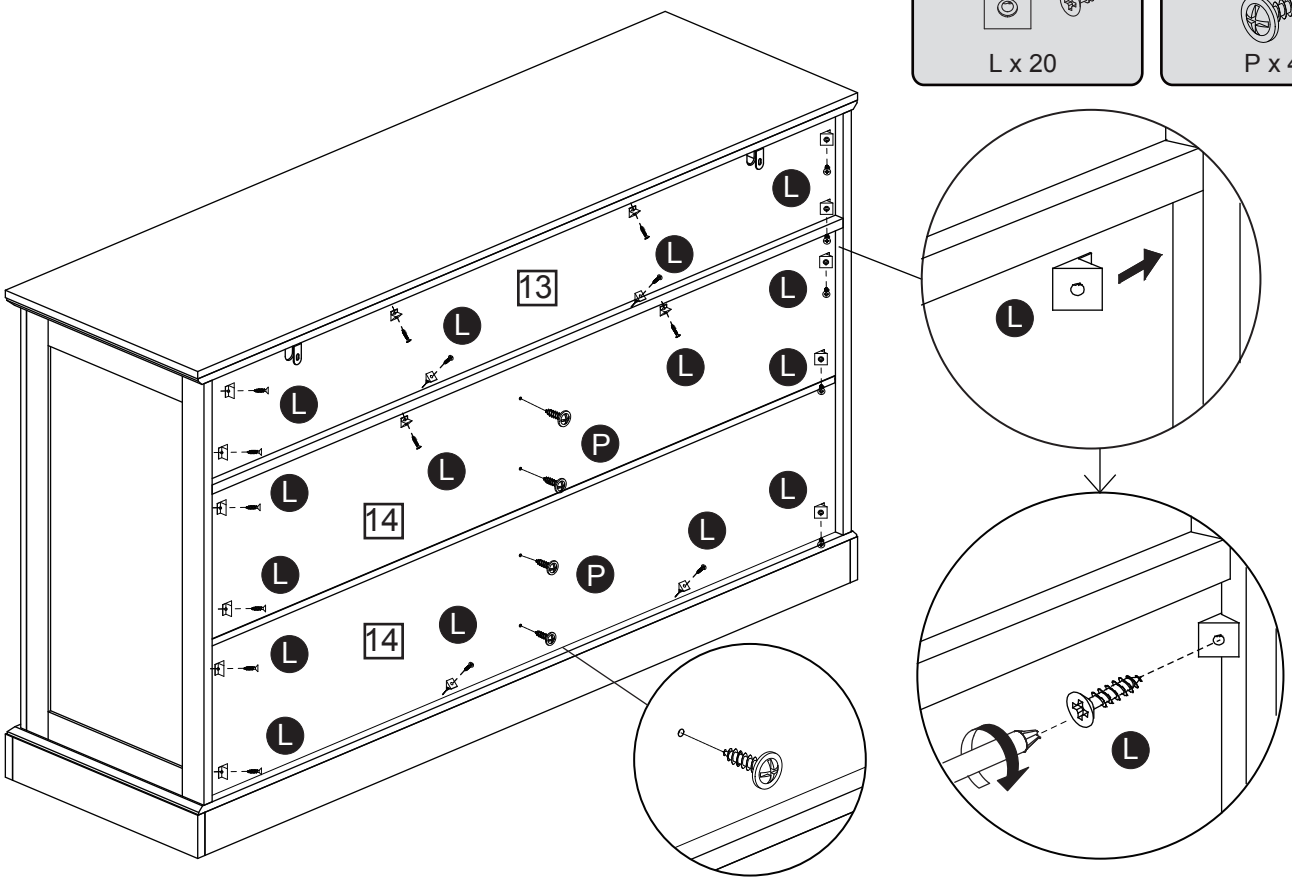

Step 20

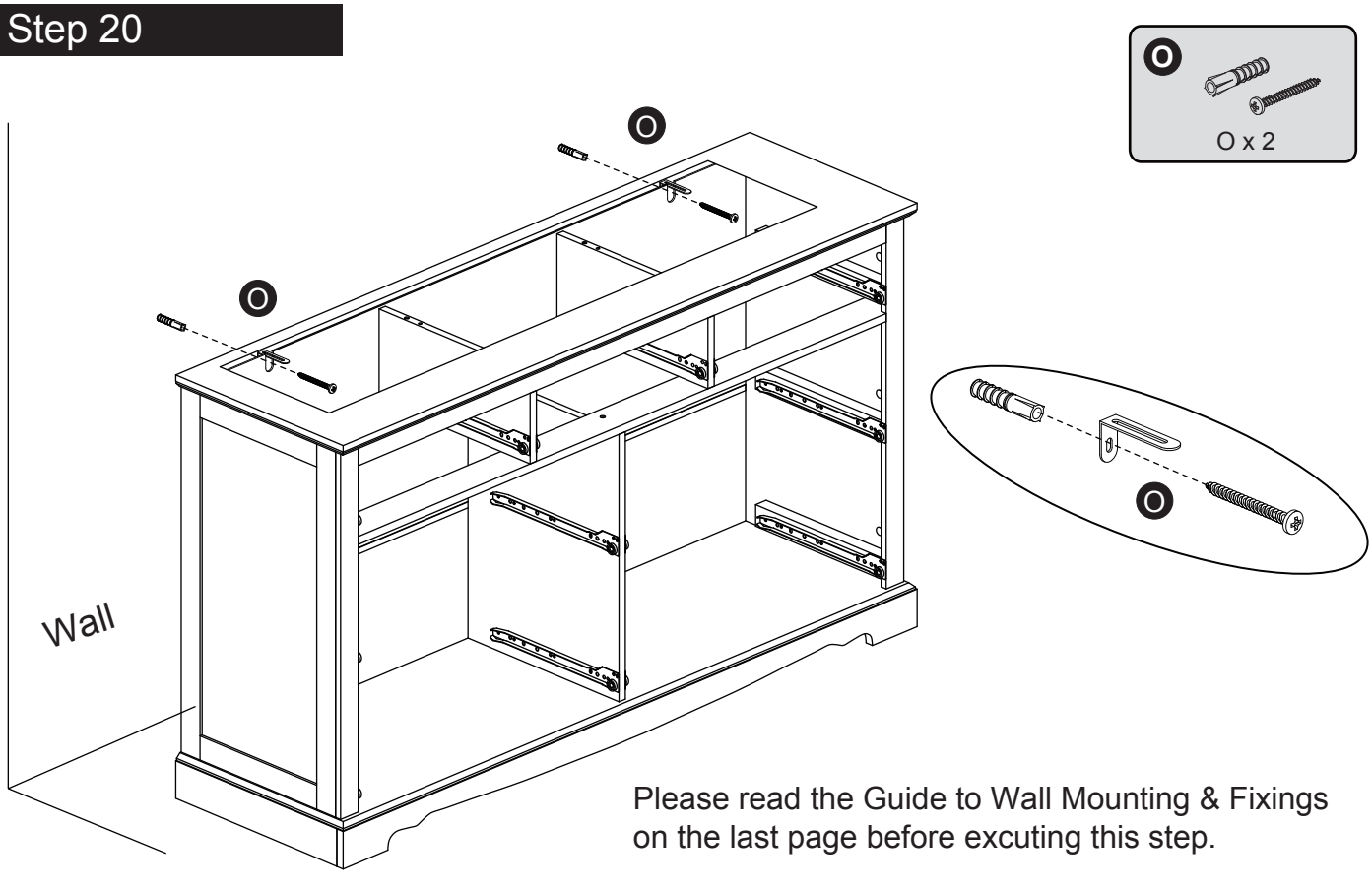

Please read the Guide to Wall Mounting & Fixings on the last page before excuting this step.

Step 21

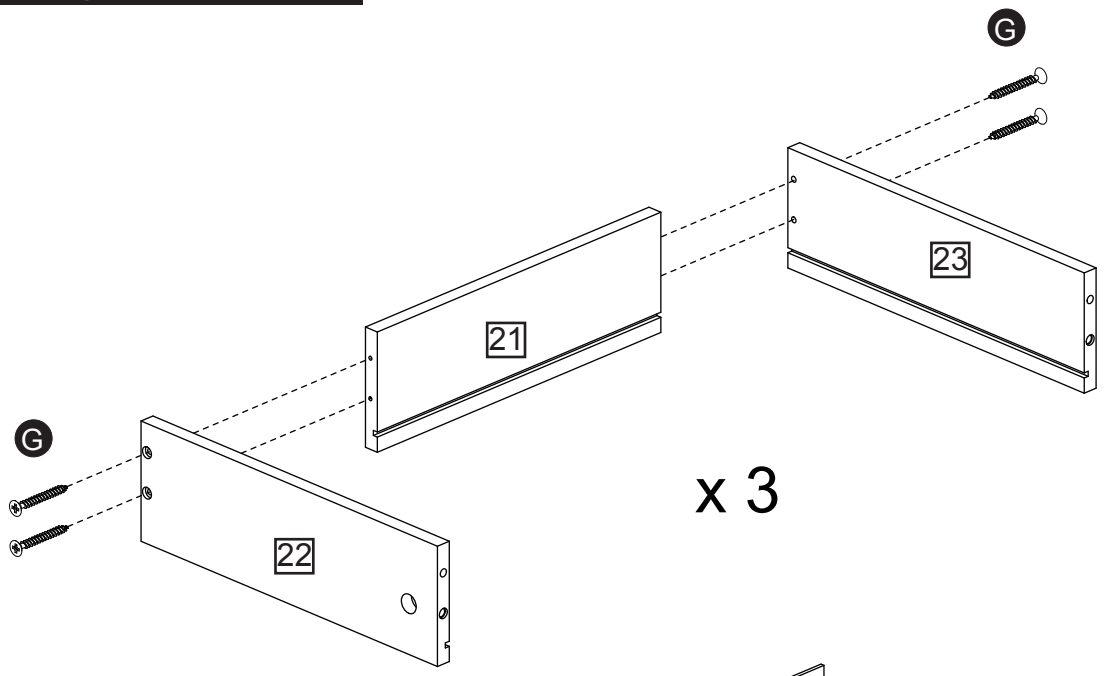

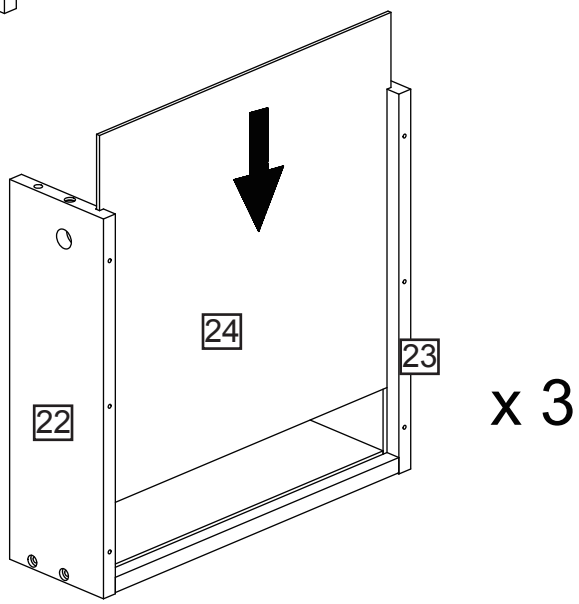

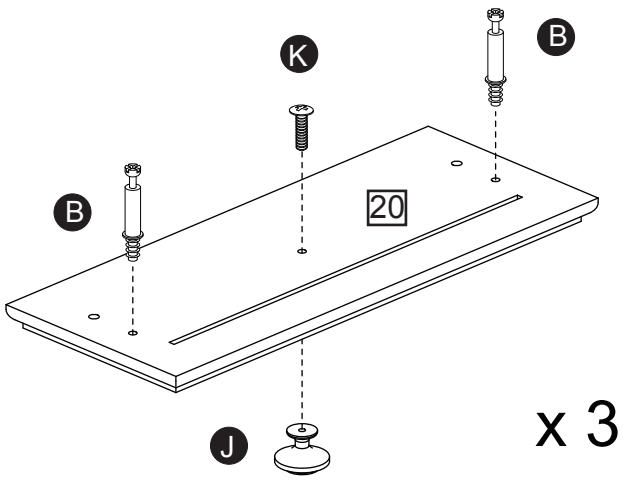

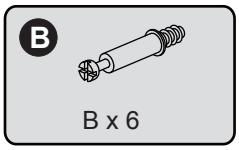

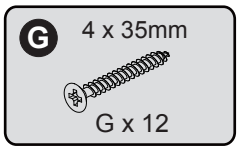

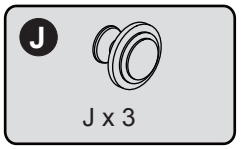

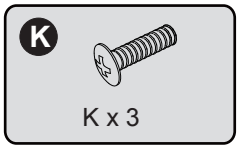

Assembly Instructions

Step 22

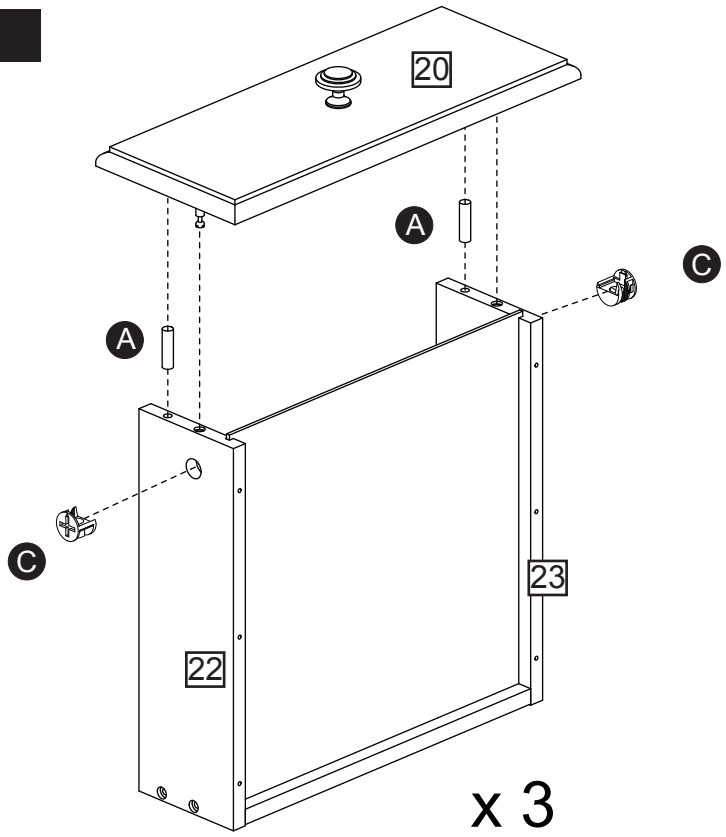

A
A x 6

C
C x 6

Step 23

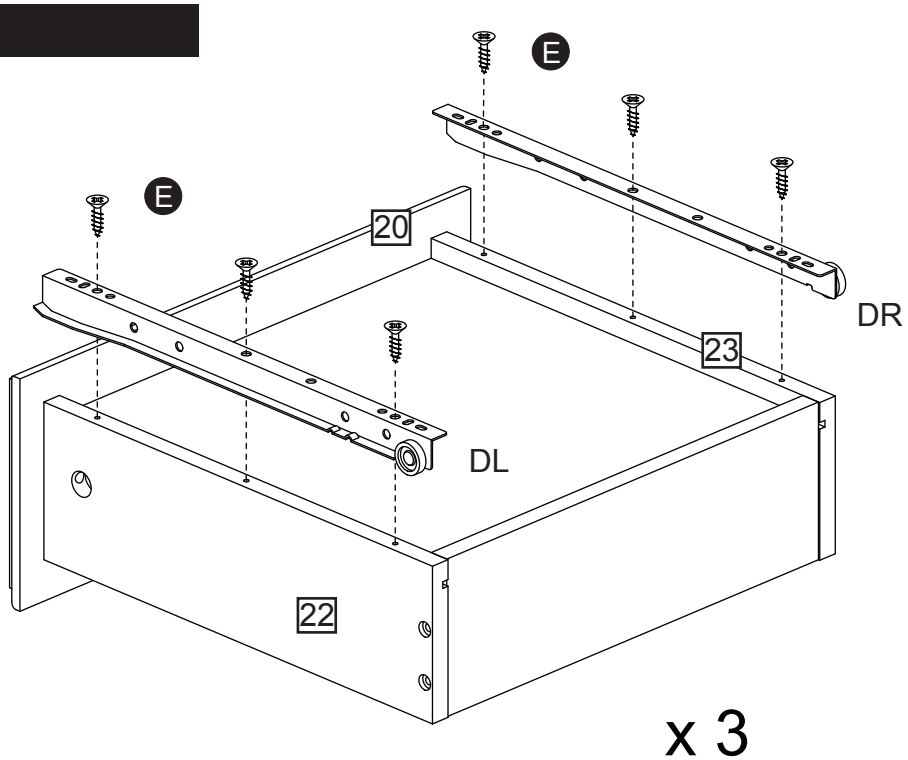

E
3*12mm
E x 18

M
DL
DR
M x 3

Assembly Instructions

Step 24

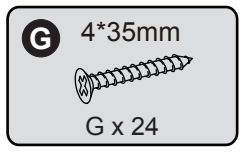

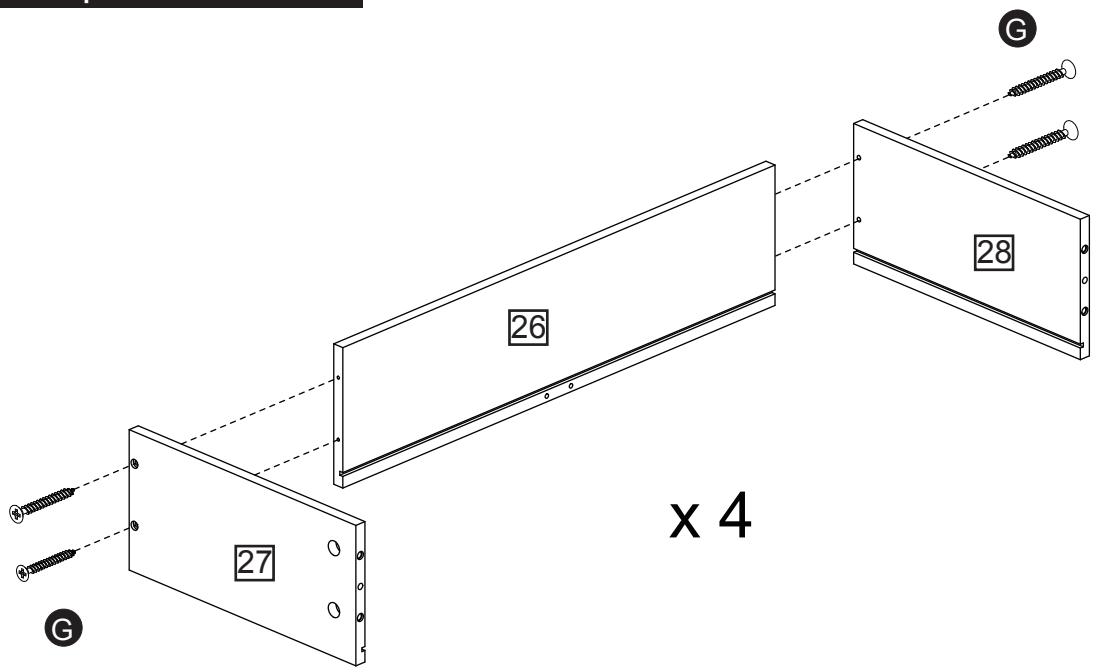

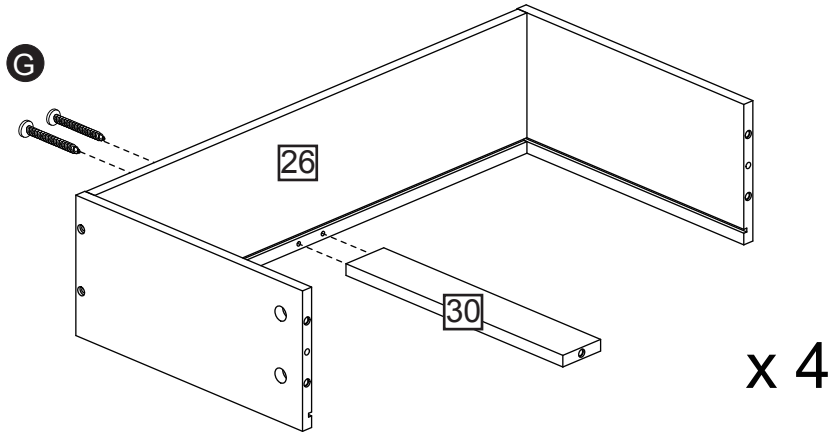

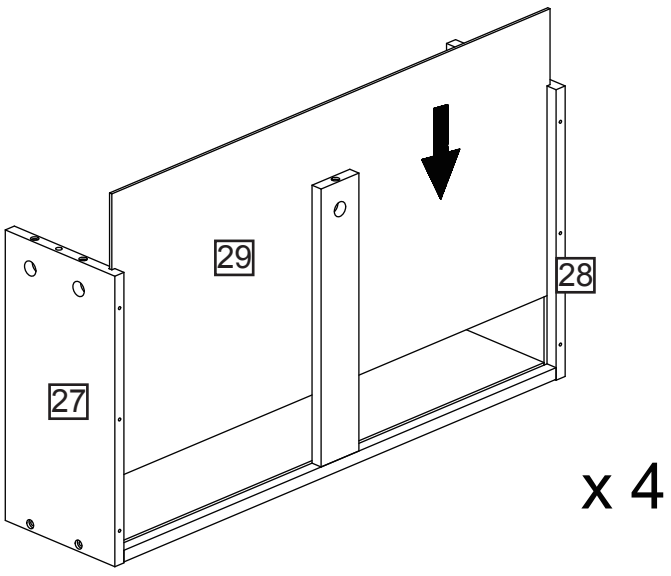

Assembly Instructions

Step 25

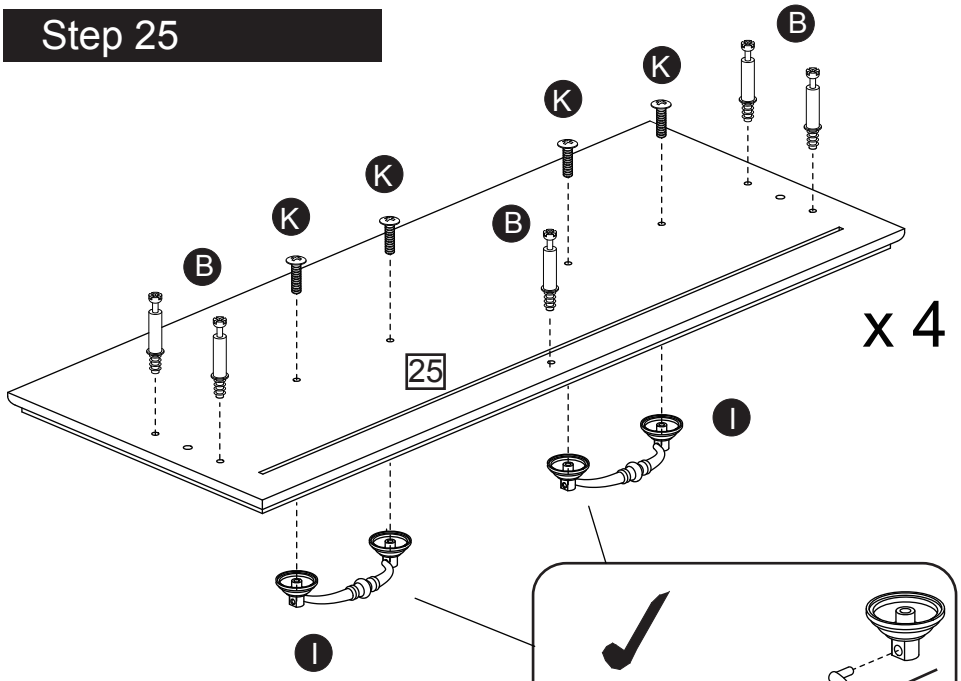

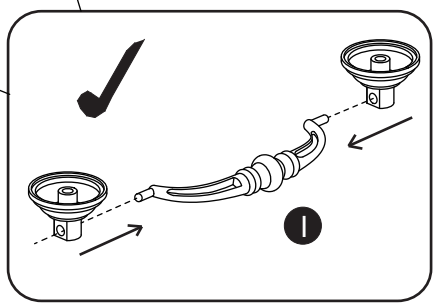

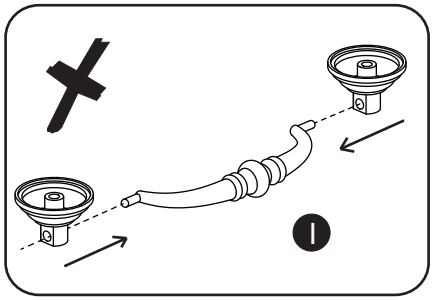

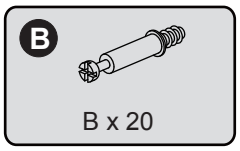

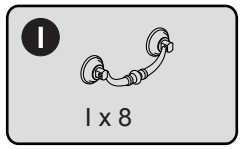

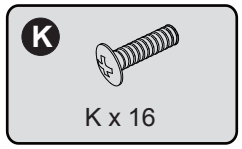

Step 26

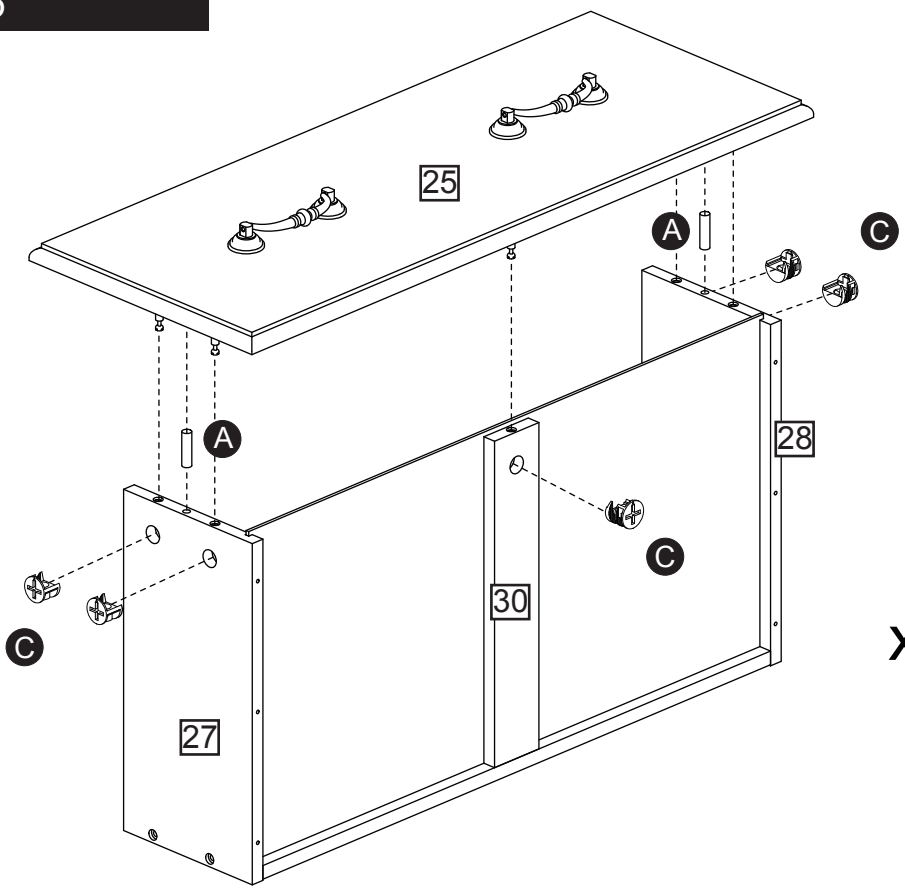

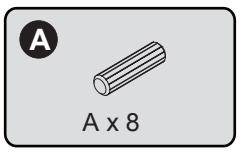

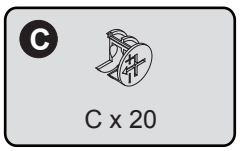

Assembly Instructions

Step 27

E 3*12mm



E x 24

M DL DR



M x 4

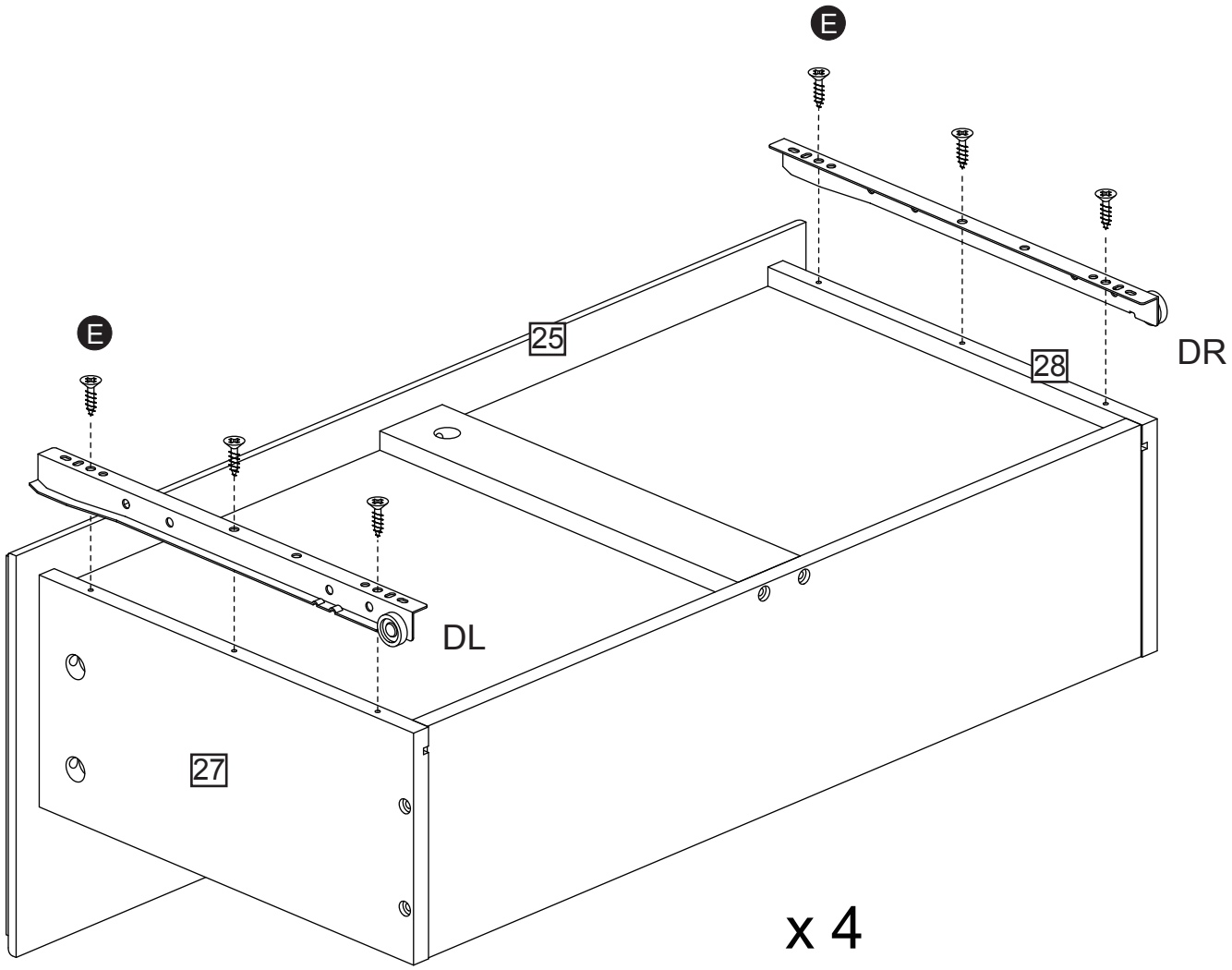

Assembly Instructions

Step 28

Congratulation! You've made to the last step! But don't be too thrilled yet, put on the drawer can be frustrating if you do it wrong. So, take your time and follow the steps below.

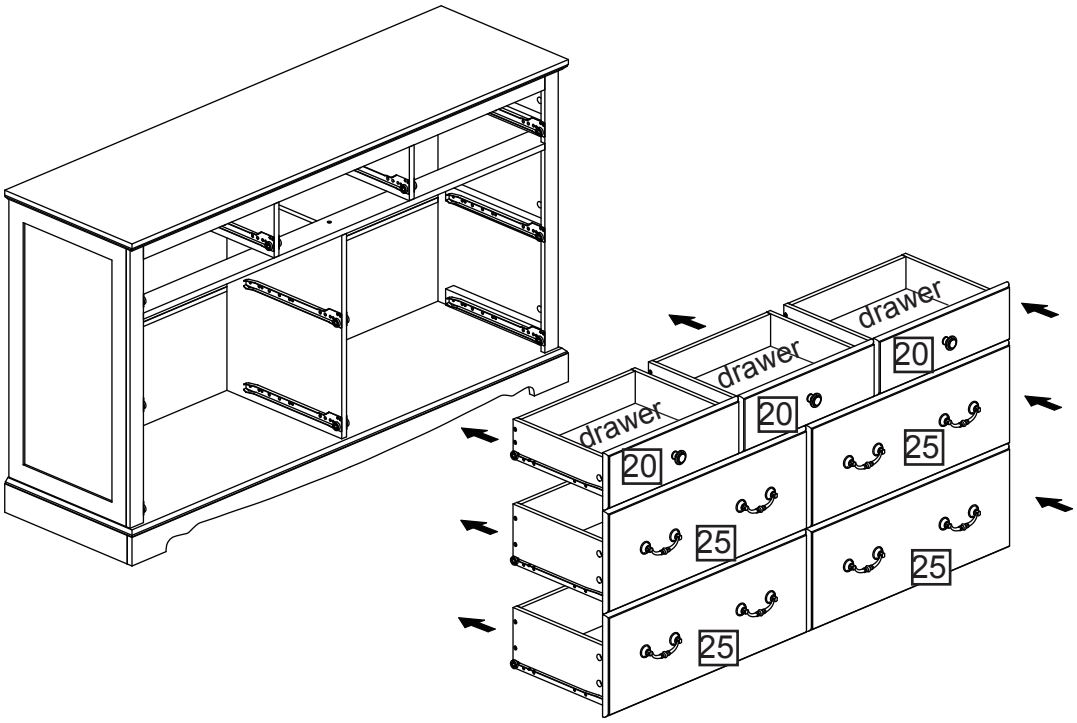

1.Please ensure that you have matched the wheels on BOTH sides of the drawer with the wheels on rails installed BEFORE push in the drawer.

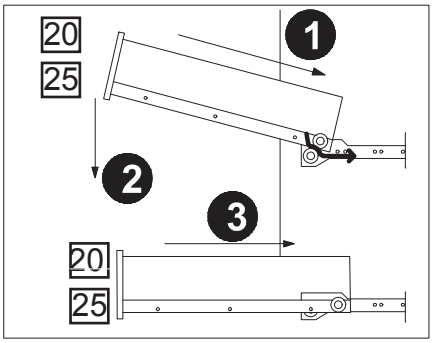

2.If the following occurs, redo the first **two step**.

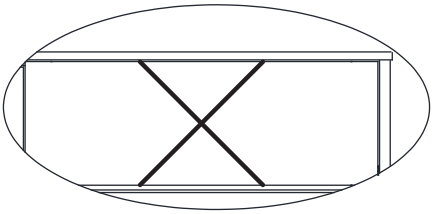

(both wheel are off the rails)

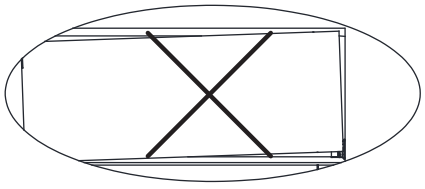

(one wheel is off the rail)

A Guide to Wall Mounting & Fixings

Important note:

If plastic wall plugs (rawl plugs) are supplied with your product, e.g.:



- these are only suitable for use in masonry walls.

If you are in any doubt about the correct wall plugs for your wall, seek professional advice.

Failure of the product due to using the incorrect fixings is the responsibility of the installer.

Important: when drilling into walls always check that there are no hidden wires or pipes etc.

Make sure that the screws and wall plugs being used are suitable for **supporting your unit. Consult a qualified tradesperson if you** are unsure.

Hints:

1: General rule: always use a larger screw and wall plug if you are not sure.
2: Ensure you use the recommended drill bit to match the wall plug and hole size.
3: Ensure you drill the hole horizontally; do not force the drill or enlarge the hole.
4: Take extra care when drilling high walls, ceilings and ceramic tiles. Ensure wall plugs are inserted beyond the thickness of the ceramic tiles to avoid the tiles splitting or cracking.
5: Ensure wall plugs are well fitted and are a tight fit in the drilled hole.

Types of walls

You can use one of the following types of wall plug if your walls are made of brick, breeze block, concrete, stone or wood.

No.1 "General Purpose" wall plug

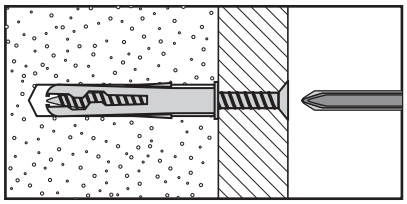

Generally aerated blocks should not be used to support heavy loads, use a specialist fitting in this case. For light loads, general purpose wall plugs can be used.

No.3 "Cavity Fixing" wall plug

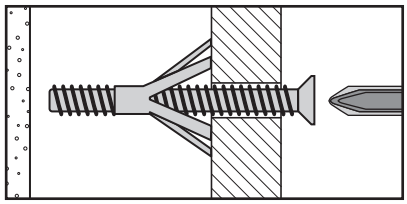

For use with plasterboard partitions or hollow wooden doors.

No.5 "Hammer Fixing" wall plug

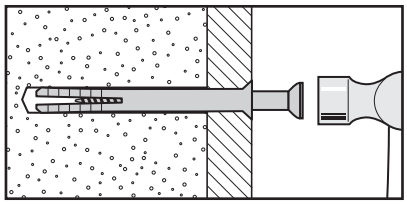

For use with walls stuck with plasterboard. The hammer fixing allows it to be fixed to the wall rather than the plasterboard. Always check the fixing is secure to the retaining wall.

No.2 " Plasterboard" wall plug

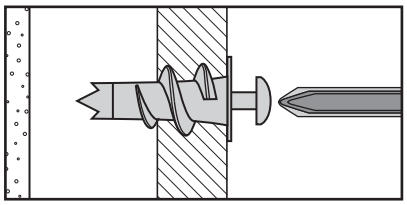

For use when attaching light loads onto plasterboard partitions.

No.4 " Cavity Fixing – Heavy Duty" wall plug

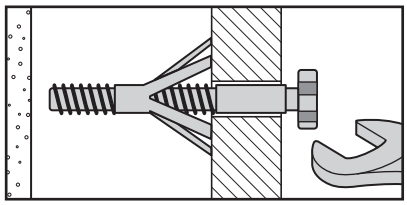

For use when fitting or supporting heavy loads such as shelving, wall cabinets and coat racks.

No.6 " Shield Anchor" wall plug – heavy loads

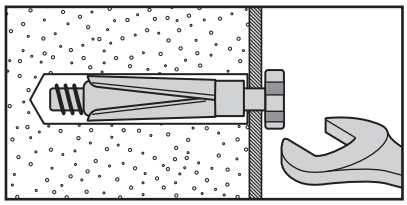

For use with heavier loads such as TV and HiFi speakers and satellite dishes etc.

Care & Maintenance

Safety: always check the fitting and location to ensure your safety in and around the home.

Fitting: from time to time check the fitting to ensure the wall plugs or screws do not become loose.