ASSEMBLY INSTRUCTIONS

Nightstand With 2 Drawers

A Nightstand	B Leg-L	C Leg-R	D Jcbc M6 x 35mm
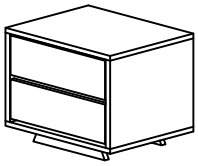	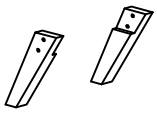	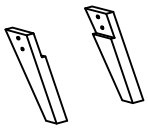	
1 pc	2 pcs	2 pcs	8 pcs

E Wood Button	F Allen Key M4
	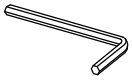
8 pcs	1 pc

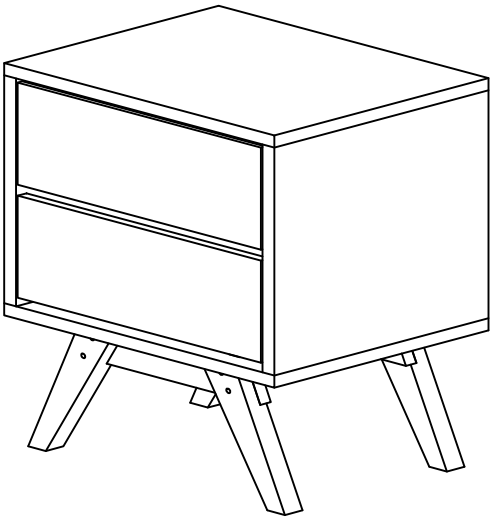

This page lists all the contents included in the box. Please take the time to identify the hardware as well as the individual components to this product. As you unpack and prepare for assembly, place the contents on a carpeted or padded area to protect them from damage.

1 Place the Nightstand (A) on the ground. Tighten the Nightstand (A), Leg-L (B) and Leg-R (C) by Jcbc (D) and Wood Button (E), and lock with Allen Key (F).

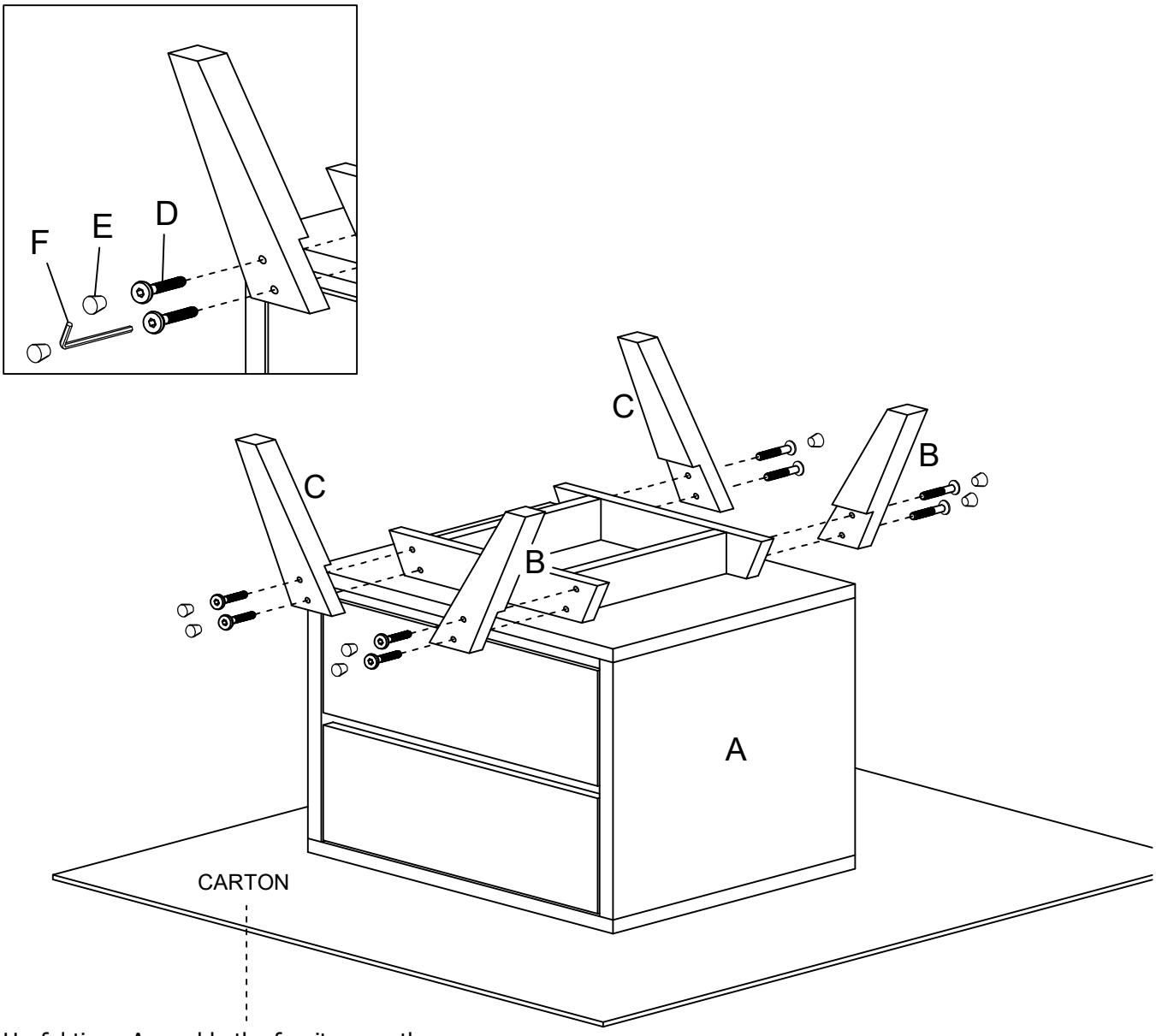

Useful tips : Assemble the furniture on the packing carton to prevent scratches.

Cleaning & Care

Treat Surface with care. Surface is resistant to scratches but is not scratch resistant. Clean surfaces with a dry or damp soft cloth. Do not use abrasive cleaners. Hardware may loosen over time. Periodically check that all connections are tight.