SUK:N652P517685G/N652P517686G

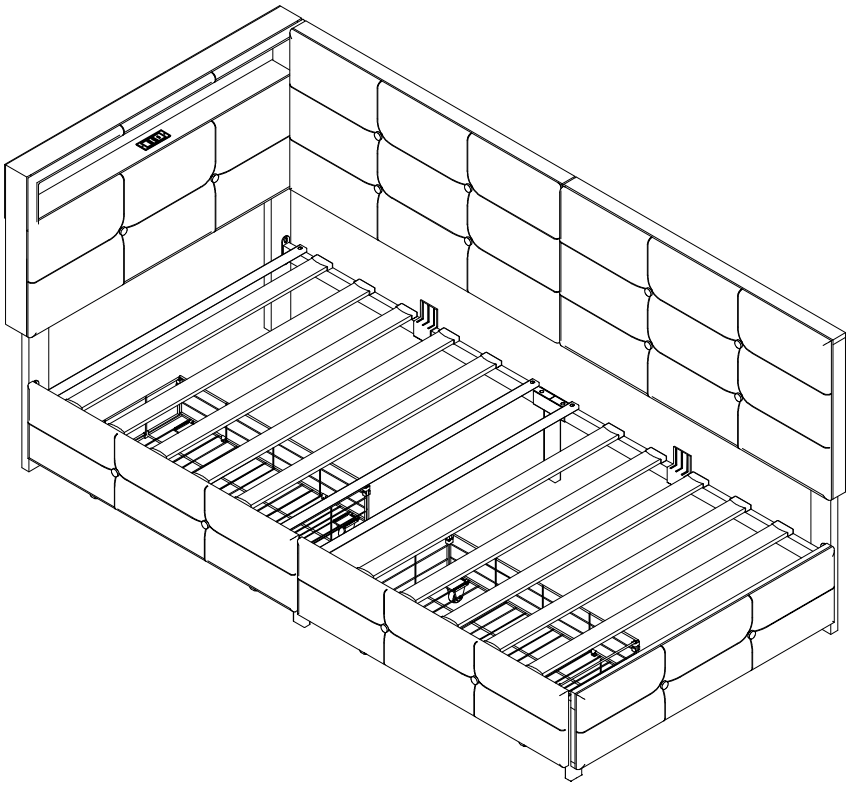

TIPS

1.This product is divided into 2 parcels for delivery. They may not arrive at the same time. Please wait patiently.

2.Please read the instructions fully before assembly. These instructions include important information which could ensure correct assembly. We have been working on providing high quality products for you. However, in the rare instance that your product is defective,missing parts or there are some issues, please don't hesitate to contact our customer service to submit parts requirements, assembly suggestion,or warranty claims, and we will give the best solution as soon as possible. If necessary, we need you to provide some more clear pictures of the issue.

3.Insert the screws in holes and tighten the screws, but not too tight, 70%~80% is ok, finally tighten all the screws. If some issues happened that some screws can not target to the hole or some parts are difficult to install, please adjust the tightness of the screws.

4.2 people are recommended to finish.

English

IMPORTANT ! KEEP FOR FUTURE REFERENCE : READ CAREFULLY

- To be assembled by an adult. Assembly must be checked by an adult before use
- WARNING ! Keep all screws, small parts and plastic bags out of the reach of children
- Properly identify all parts before assembling
- Never use your item if any of its parts are broken or missing
- Should any problems arise, please contact our After Sales Service
- Manufacturer's instructions shall be followed at all times
- Care: Clean with a soft, dry cloth. In case of larger stains, carefully rub with a slightly damp, non-abrasive sponge
- Do not jump on the bed

Français

IMPORTANT ! CONSERVER POUR RÉFÉRENCE ULTÉRIEURE : LIRE ATTENTIVEMENT

- Le montage doit être effectué par un adulte. Le montage doit être vérifié par un adulte avant utilisation
- ATTENTION ! Tenir les vis, les petites pièces et les sachets en plastique hors de portée des enfants
- Identifiez correctement toutes les pièces avant de les assembler
- N'utilisez jamais votre article si l'une de ses pièces est cassée ou manquante
- En cas de problème, veuillez contacter notre service après-vente
- Les instructions du fabricant doivent être respectées à tout moment
- Entretien : nettoyer avec un chiffon doux et sec. En cas de taches plus importantes, frotter soigneusement avec une éponge non abrasive légèrement humide. légèrement humide et non abrasive
- Ne pas sauter sur le lit

Deutsch

WICHTIG ! ZUM SPÄTEREN NACHSCHLAGEN AUFBEWAHREN: SORGFÄLTIG LESEN

- Muss von einem Erwachsenen zusammengebaut werden.Der Zusammenbau muss vor dem Gebrauch von einem Erwachsenen überprüft werden
- WARNUNG! Bewahren Sie alle Schrauben, Kleinteile und Plastikbeutel außerhalb der Reichweite von Kindern auf
- Kennzeichnen Sie vor dem Zusammenbau alle Teile richtig.
- Benutzen Sie Ihren Artikel niemals, wenn Teile gebrochen sind oder fehlen
- Sollten Probleme auftreten, wenden Sie sich bitte an unseren Kundendienst
- Die Anweisungen des Herstellers sind stets zu befolgen
- Pflege: Mit einem weichen, trockenen Tuch reinigen. Bei größeren Flecken vorsichtig mit einem leicht feuchten, nicht scheuernden Schwamm abreiben. nicht scheuernden Schwamm
- Nicht auf das Bett springen

More Tips

1

English - Before installation, you can place the parts on a carpet or other soft fabric, in order to avoid damaging your floor.
Français - Avant l'installation, vous pouvez placer les pièces sur un tapis ou un autre tissu doux, afin d'éviter d'endommager votre sol.
Deutsch - Vor der Installation können Sie die Teile auf einen Teppich oder ein anderes weiches Material legen, um eine Beschädigung Ihres Fußbodens zu vermeiden.

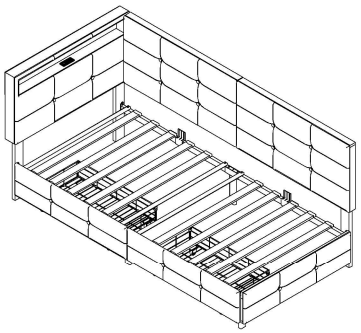

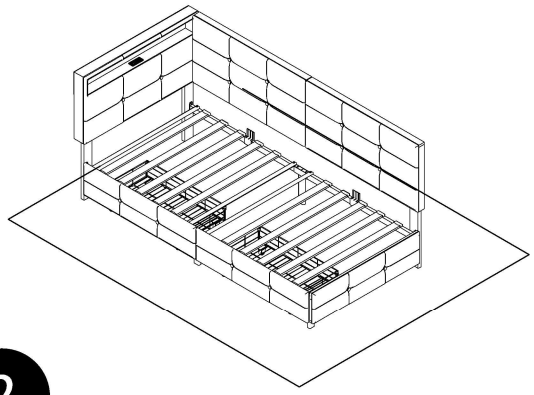

2

English - For your and your family's safety, please do not jump on beds, especially with hydraulic structures. When need to move bed, please work with more than one person to lift, not push, to avoid scratching your floor and hurting the stability of the bed.
Français -Pour votre sécurité et celle de votre famille, ne sautez pas sur les lits, en particulier sur les structures hydrauliques. Lorsqu'il est nécessaire de déplacer le lit, il est préférable de travailler à plusieurs pour le soulever, et non pour le pousser, afin d'éviter de rayer le sol et de nuire à la stabilité du lit.
Deutsch - Zu Ihrer Sicherheit und der Ihrer Familie sollten Sie nicht auf Betten springen, insbesondere bei hydraulischen Konstruktionen. Wenn Sie das Bett bewegen müssen, heben Sie es bitte mit mehreren Personen an und schieben Sie es nicht, um den Boden nicht zu verkratzen und die Stabilität des Bettes nicht zu beeinträchtigen.





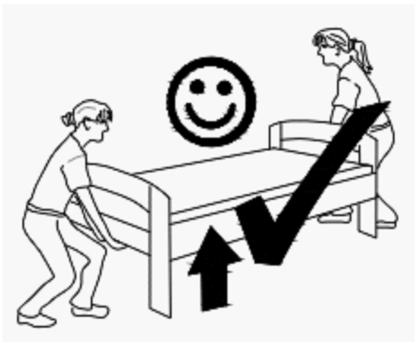

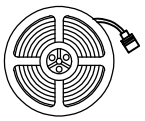

23 Light strip

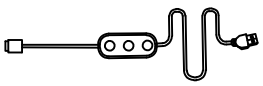

24

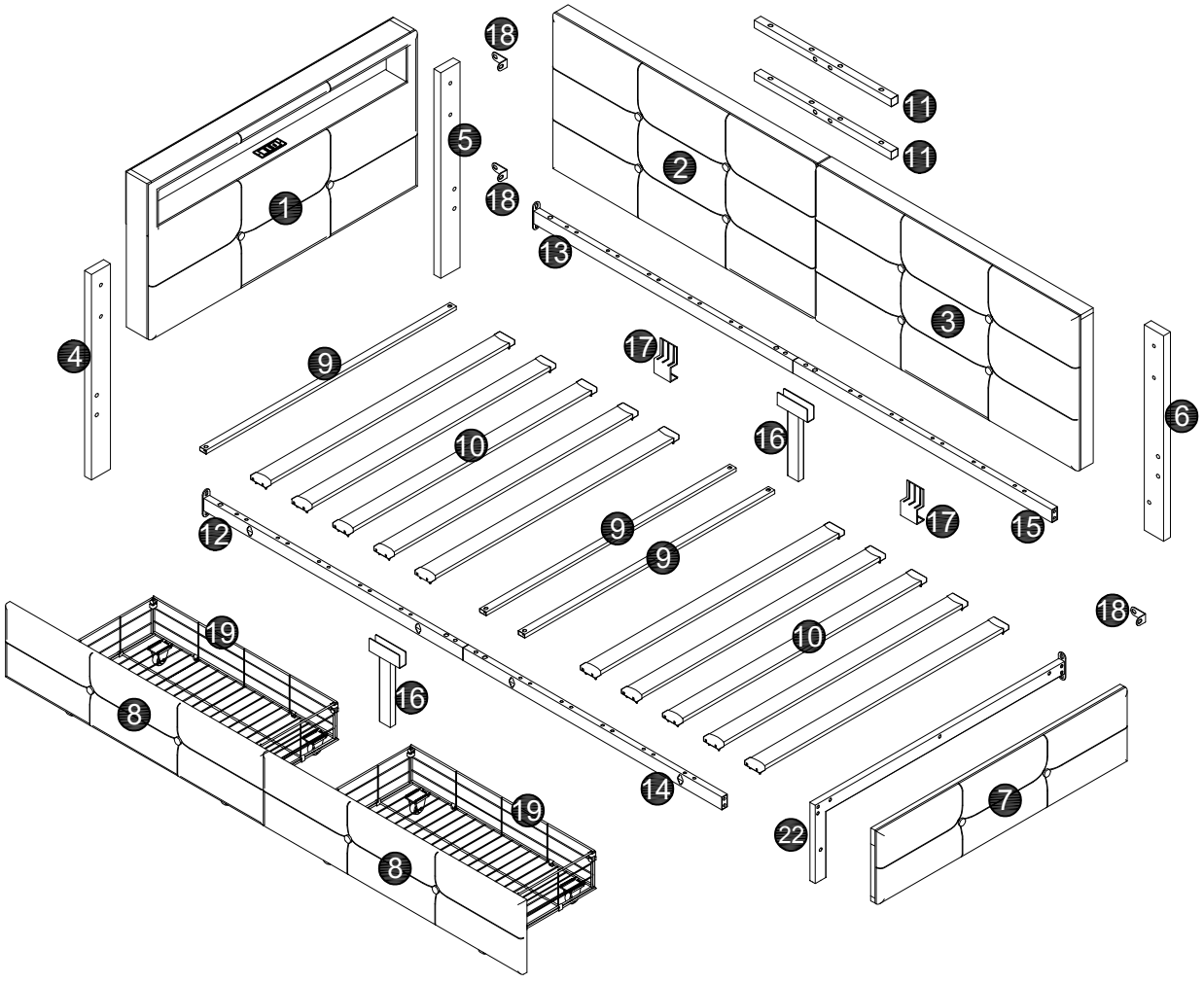



20 X8



21 X20



K X4



L X8

Part List N652P265843

1/1

1 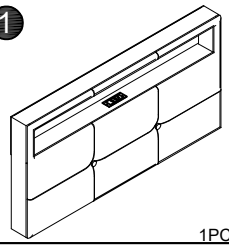 1PC	4  1PC	5  1PC	6  1PC	7 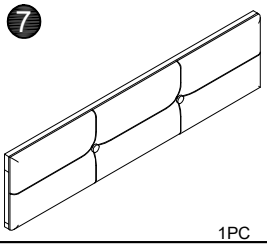 1PC
8 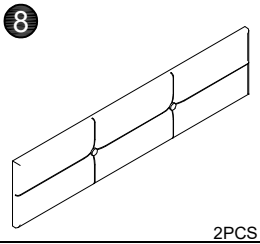 2PCS	12 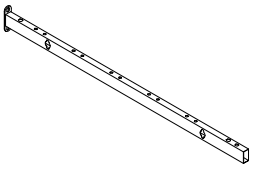 1PC	13 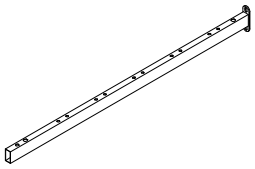 1PC	14 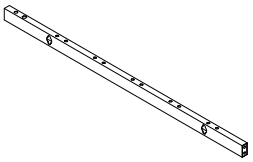 1PC	15 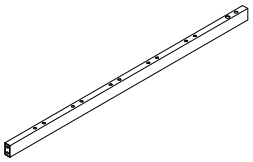 1PC
16 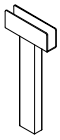 2PCS	17 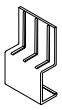 2PCS	18  3PCS	20  8PCS	21  20+2PCS
22 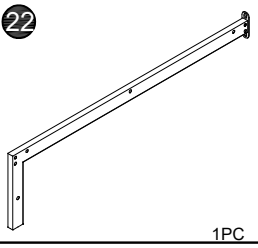 1PC	23 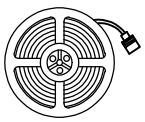 Light strip 1PC	24 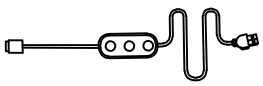 1PC		

Part List N652P517686G

2 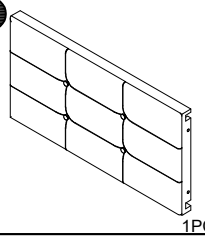 1PC	3 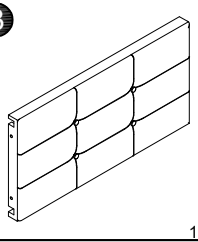 1PC	9 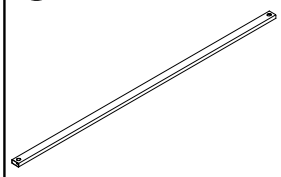 3PCS	10 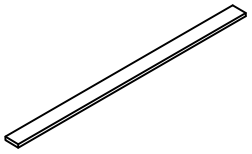 10PCS	11 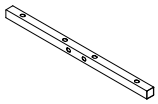 2PCS
19 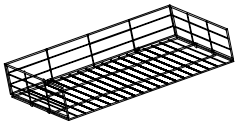 2PCS				

Part List N652P517685G

Ⓐ  M6*15 1+1PCS	Ⓑ  M6*35 4+1PCS	Ⓒ  M8*15 12+1PCS	Ⓓ  M8*20 13+1PCS	Ⓔ 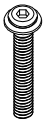 M8*40 24+2PCS
Ⓕ 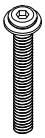 M8*50 4+1PCS	Ⓖ  M8*13 4+1PCS	Ⓗ  M6 1PC	Ⓙ  M8 1PC	Ⓚ  4+1PCS
Ⓛ  8+1PCS				

1

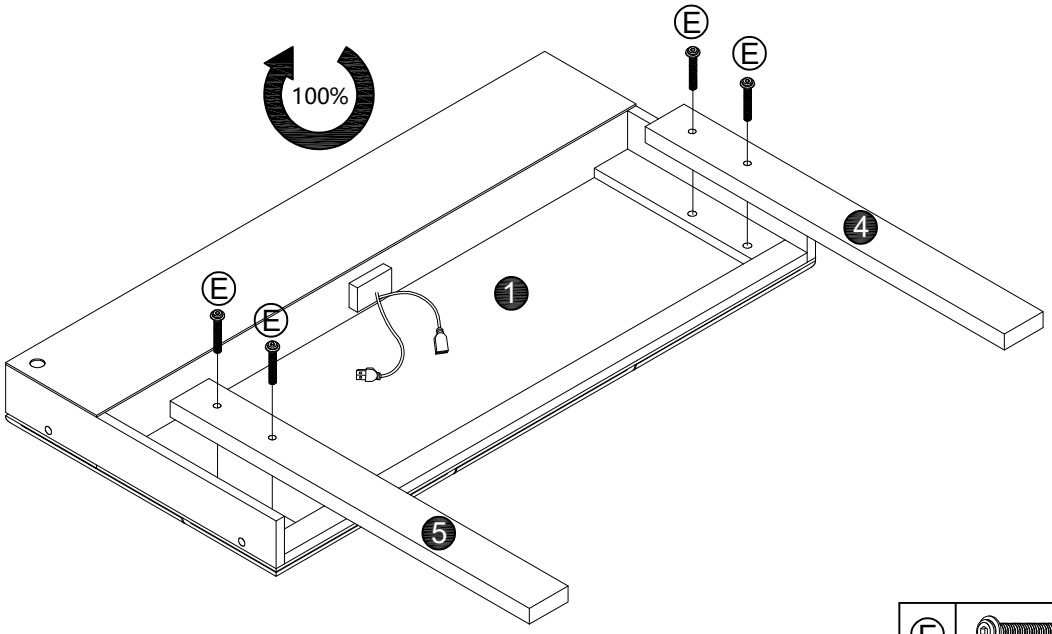

E	M8*40	4PCS

2

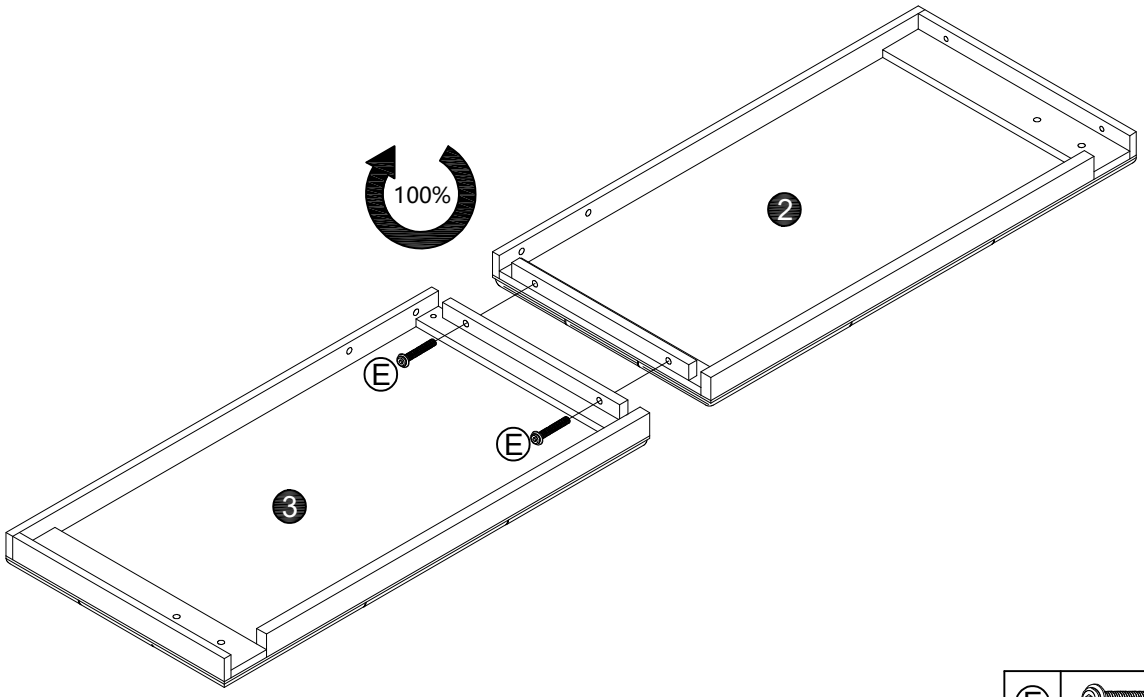

E	M8*40	2PCS

3

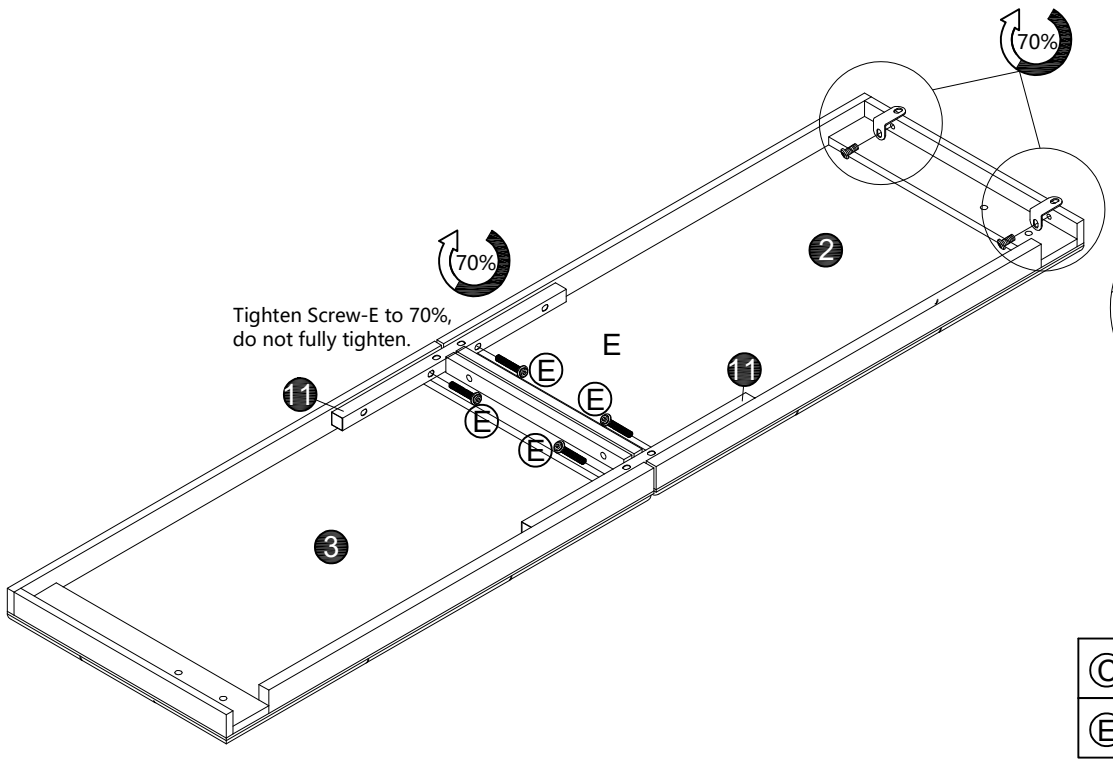

Ⓒ	M8*15	2PCS
Ⓔ	M8*40	4PCS

4

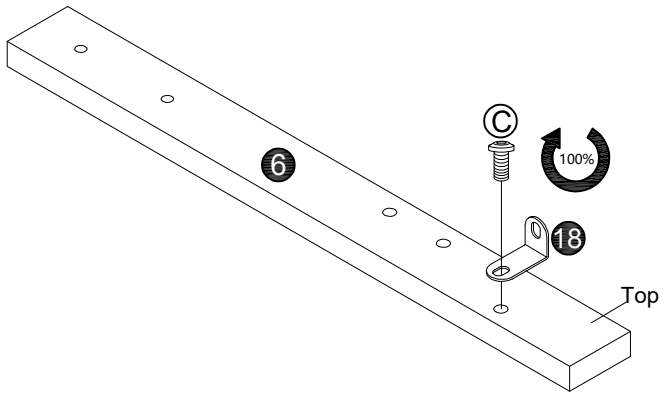

Ⓒ	M8*15	1PC

5

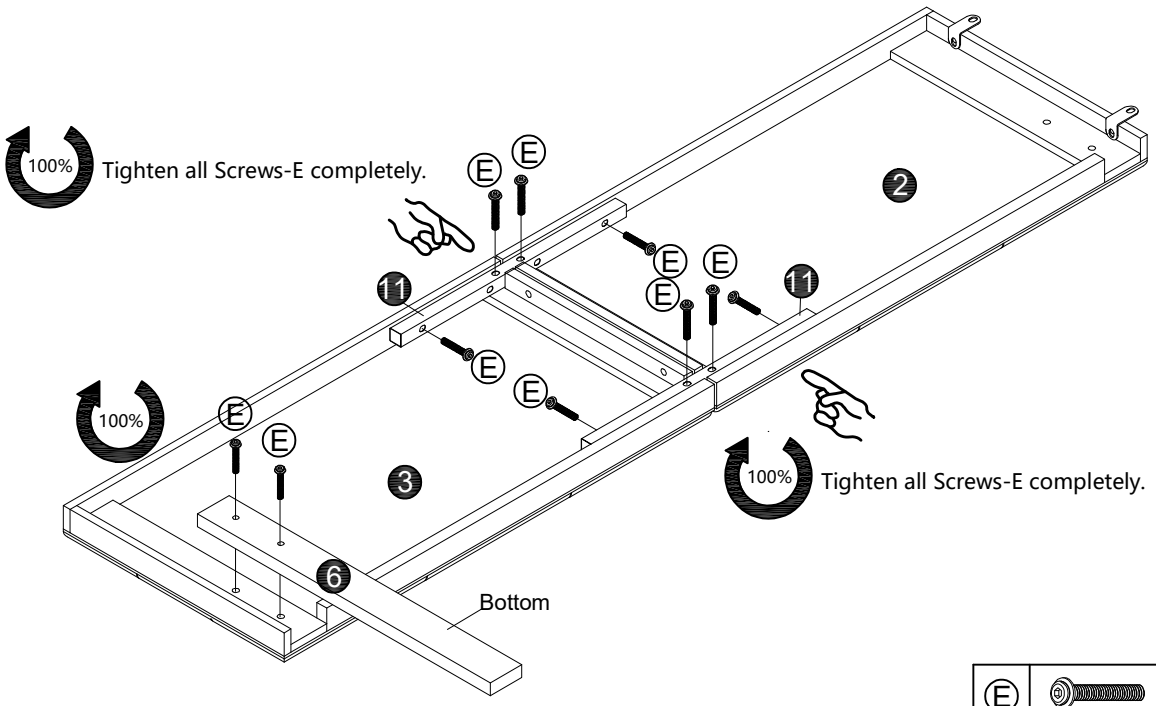

E	M8*40	10PCS

6

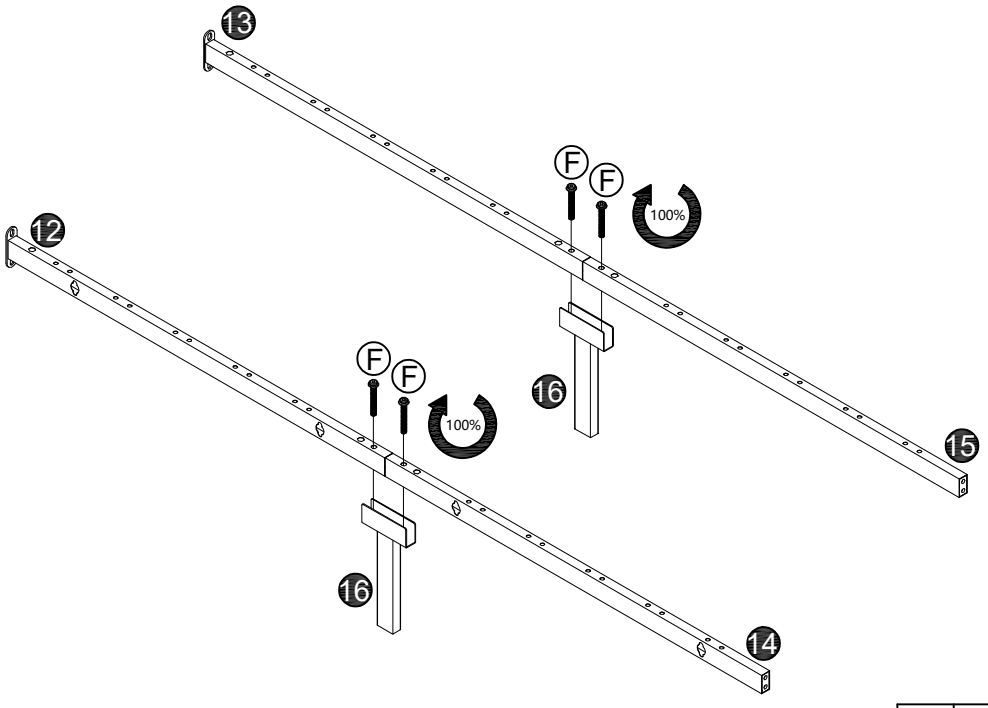

F	M8*50	4PCS

7

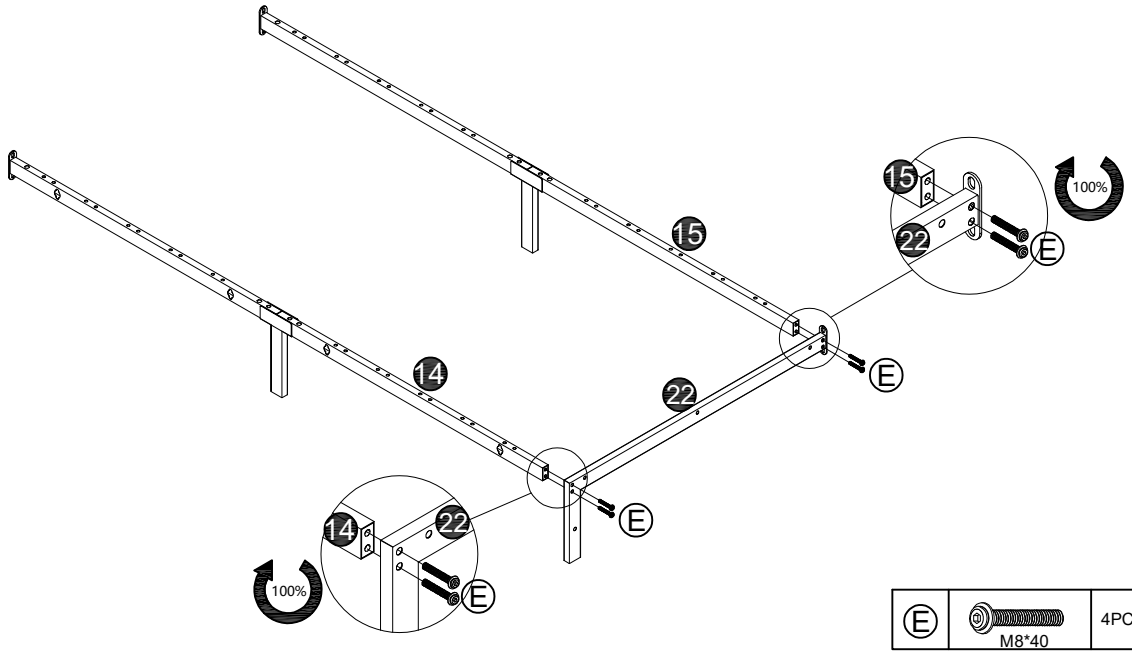

E	M8*40	4PCS

8

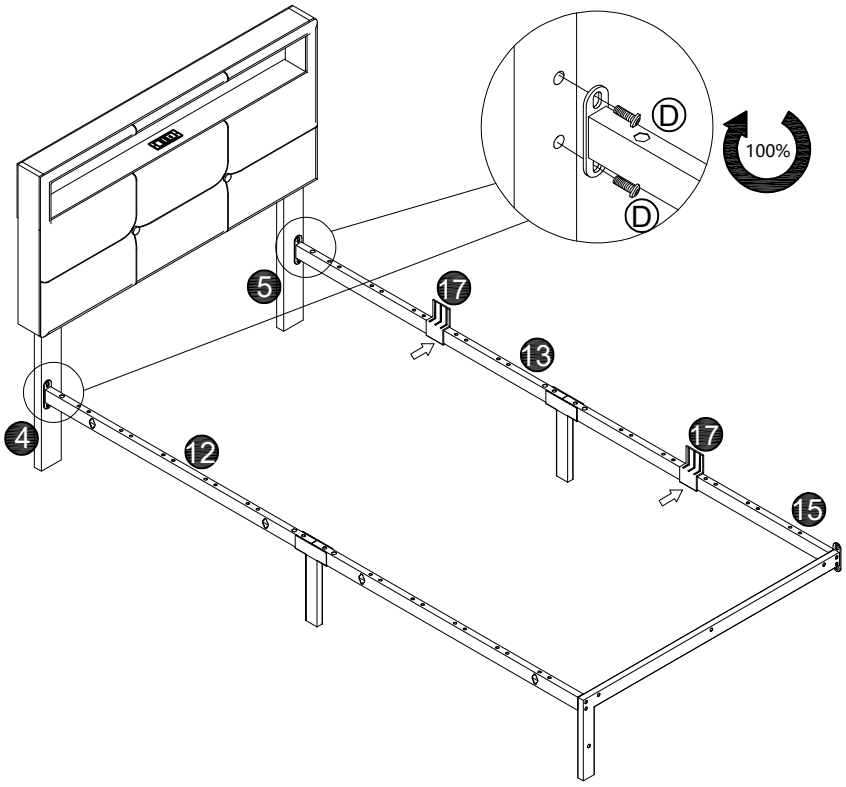

D	M8*20	4PCS

9

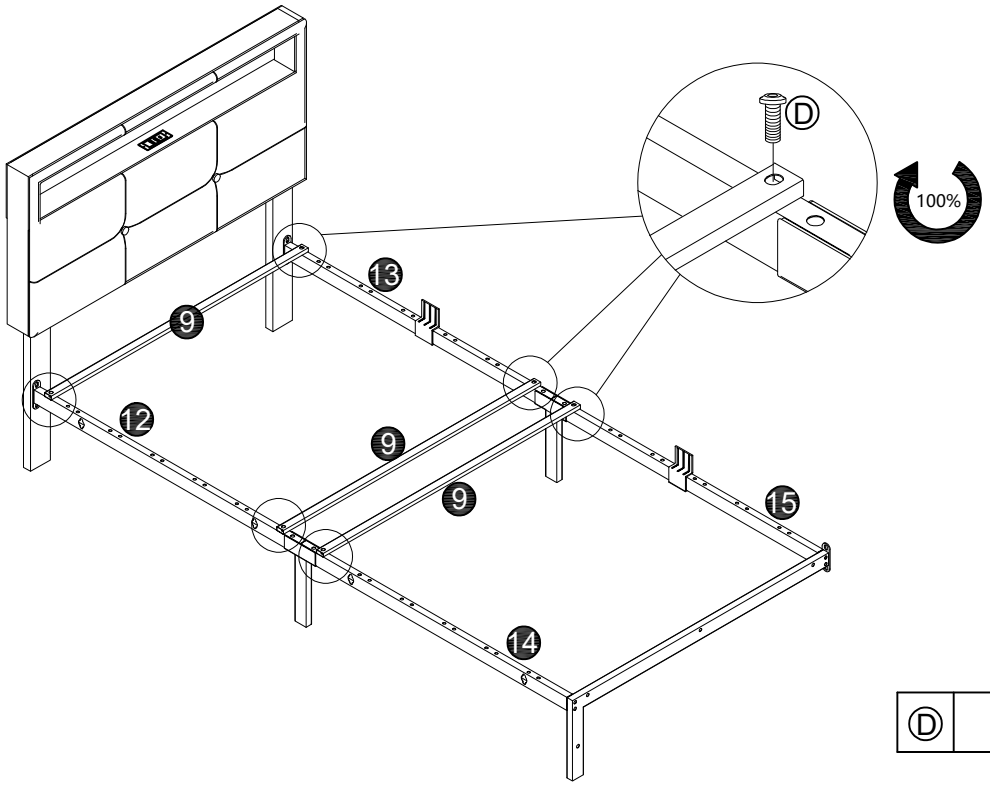

Ⓓ	M8*20	6PCS

10

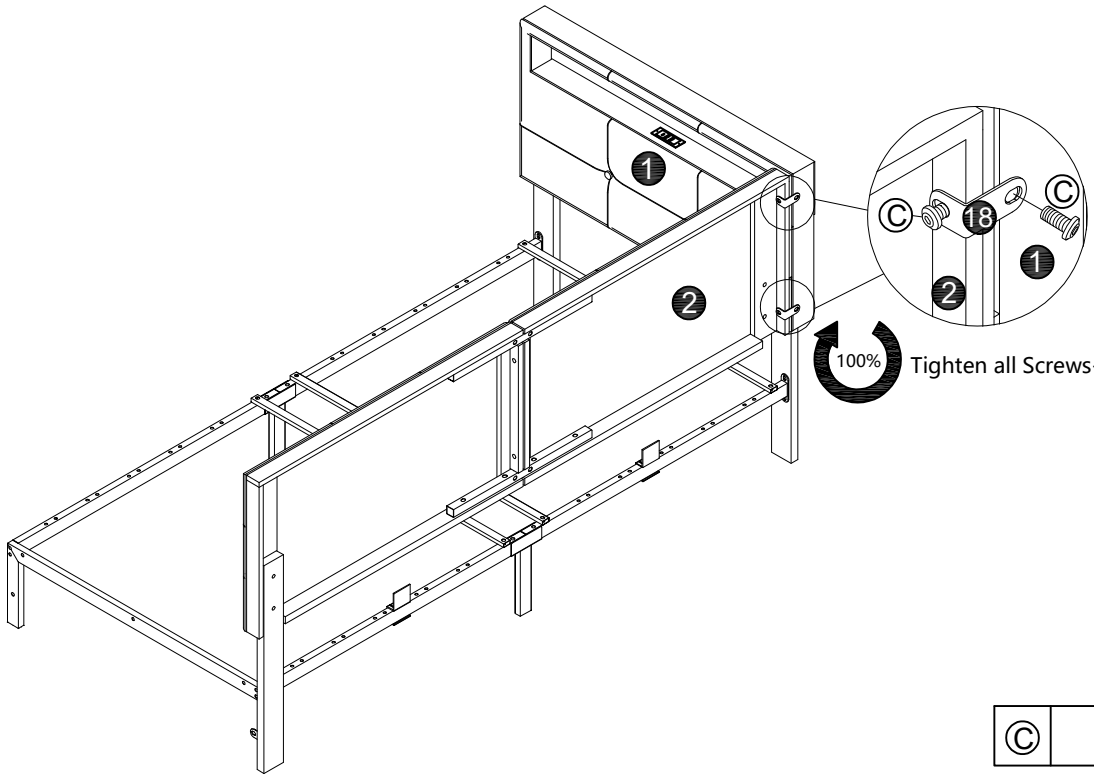

Tighten all Screws-C completely.

Ⓒ	M8*15	2PCS

11

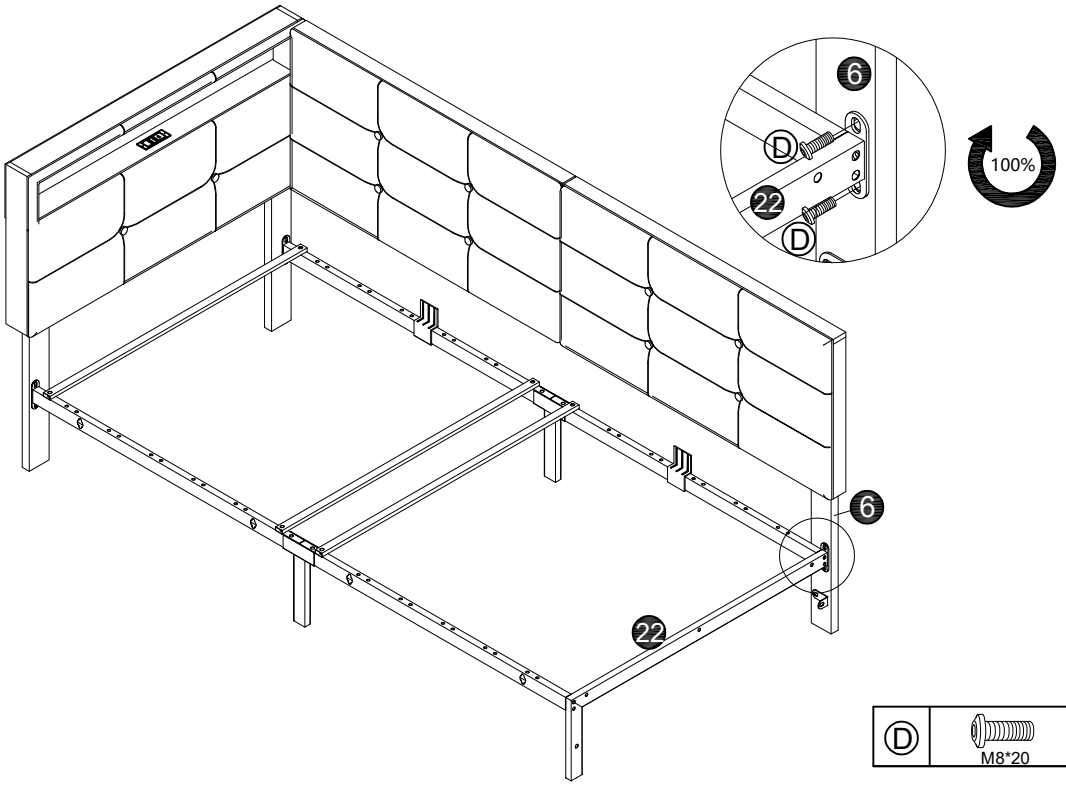

D	M8*20	2PCS

12

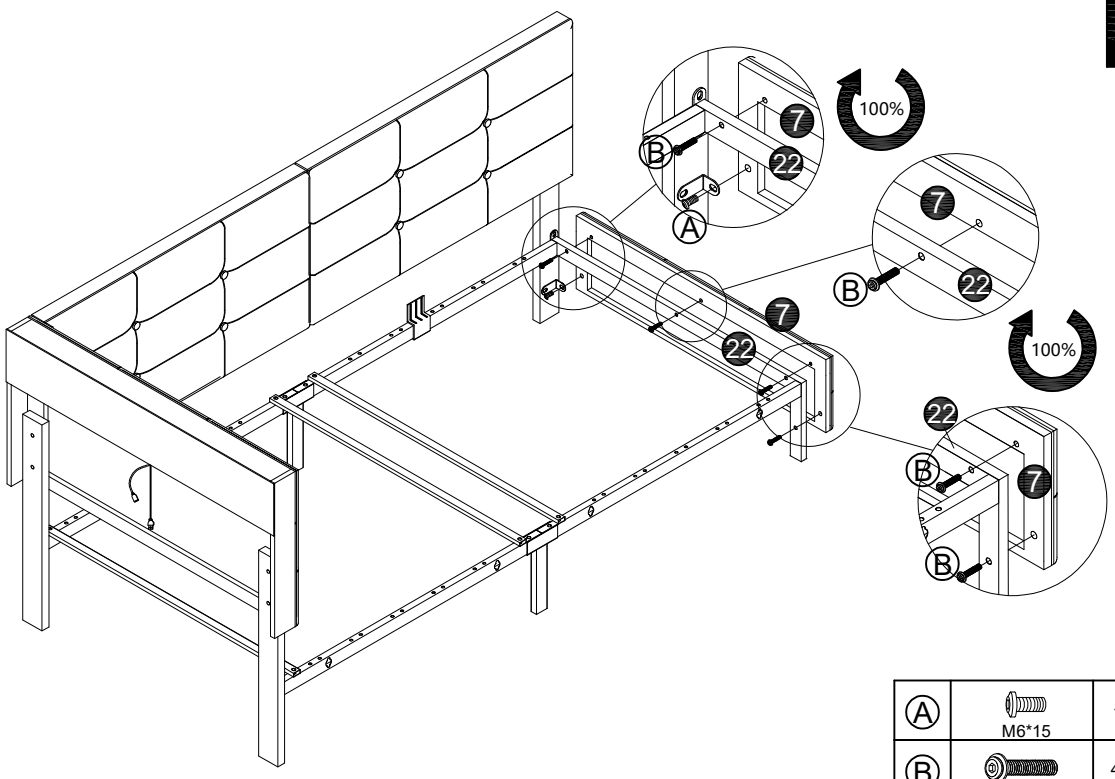

A	M6*15	1PC
B	M6*35	4PCS

13

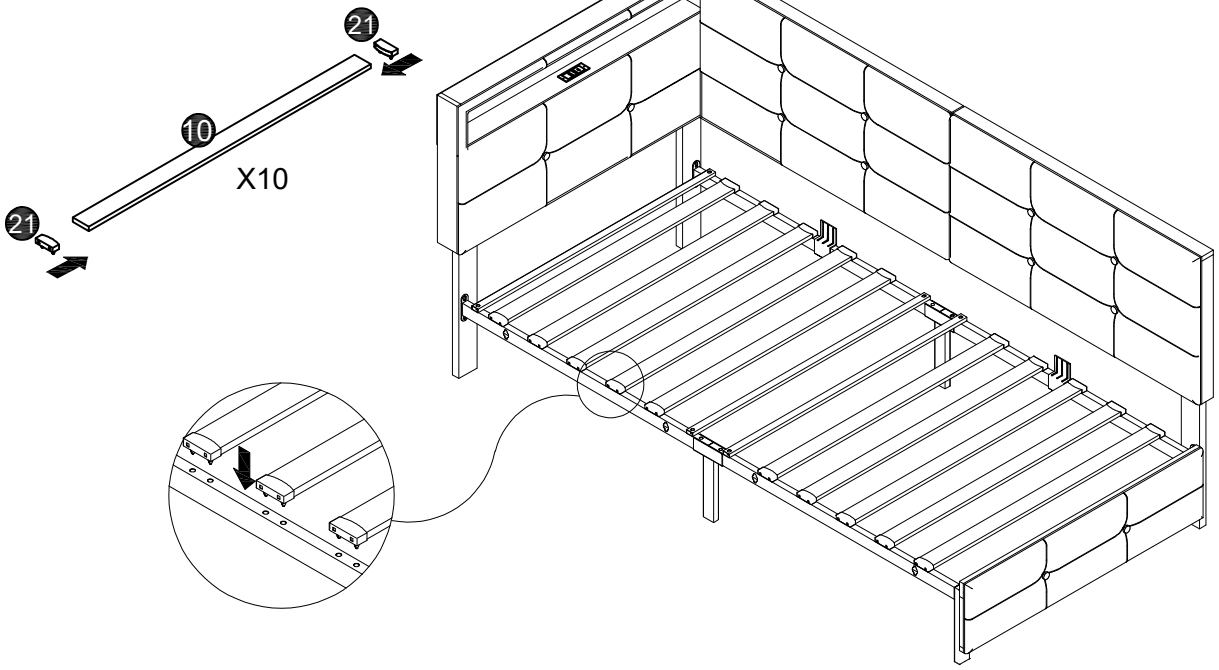

14

As shown in the figure Clip the pulley into position first

Then push the pulley to the side
At the same time, clamp the iron wire at the edge.It takes a little strength

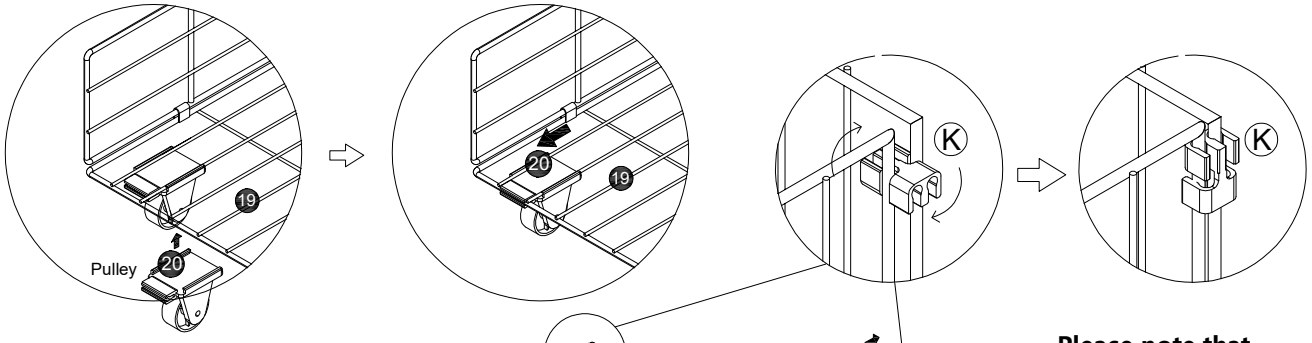

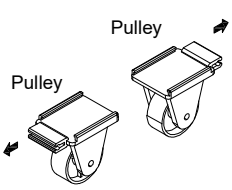

Pay attention to the orientation before clamping in

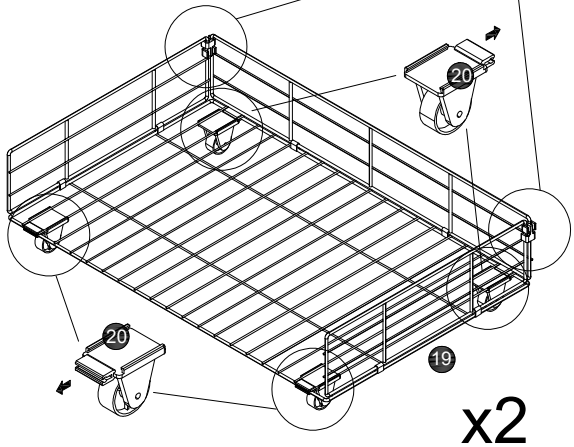

x2

Please note that this drawer base (19) has front and back sides! Please see the instructions clearly before assembling!!!

K		4PCS

15

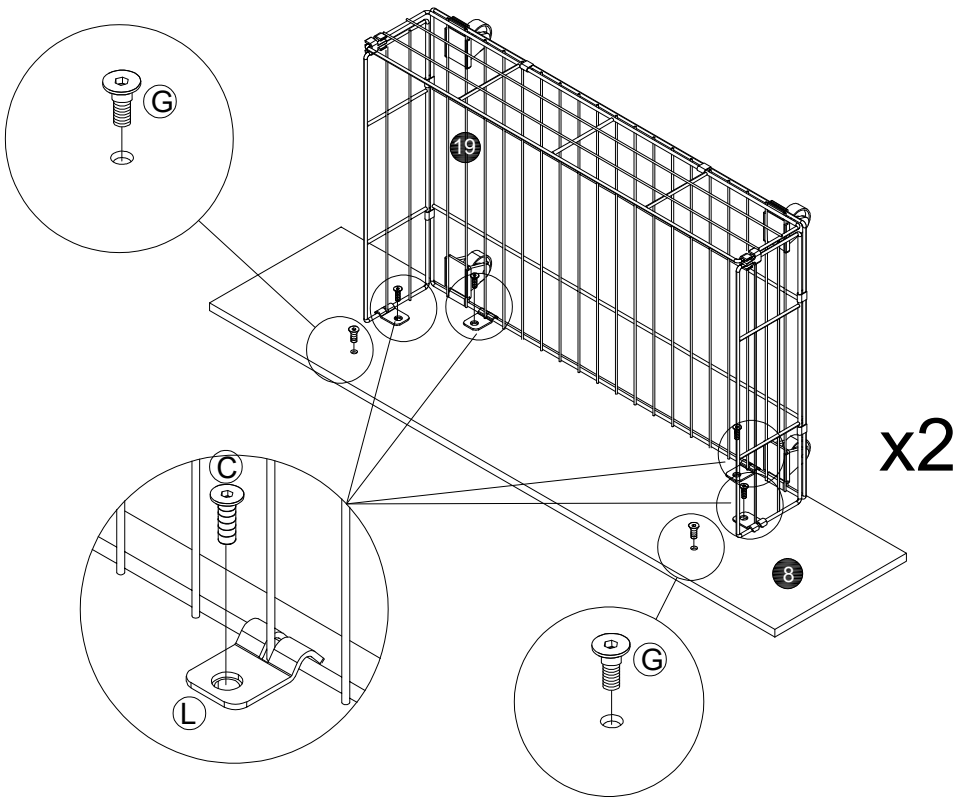

Ⓒ	M8*15	8PCS
Ⓖ	M8*13	4PCS
Ⓛ		8PCS

16

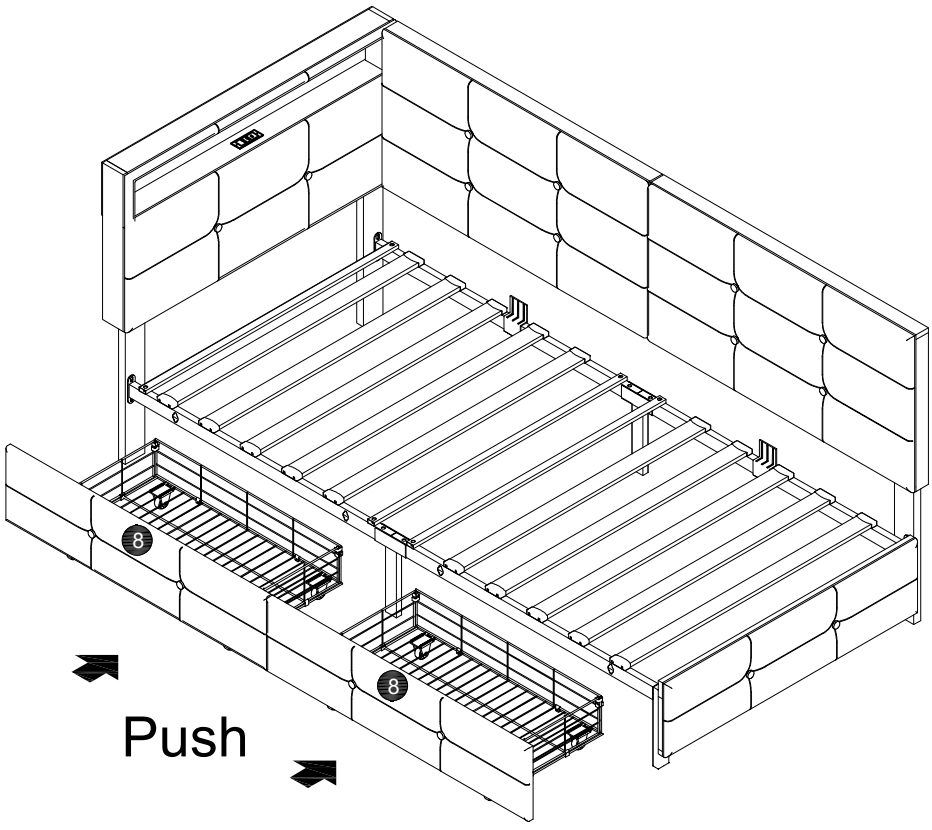

17

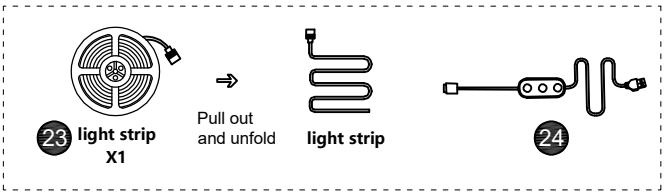

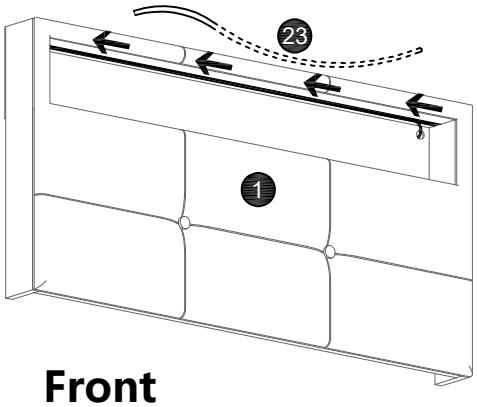

Front

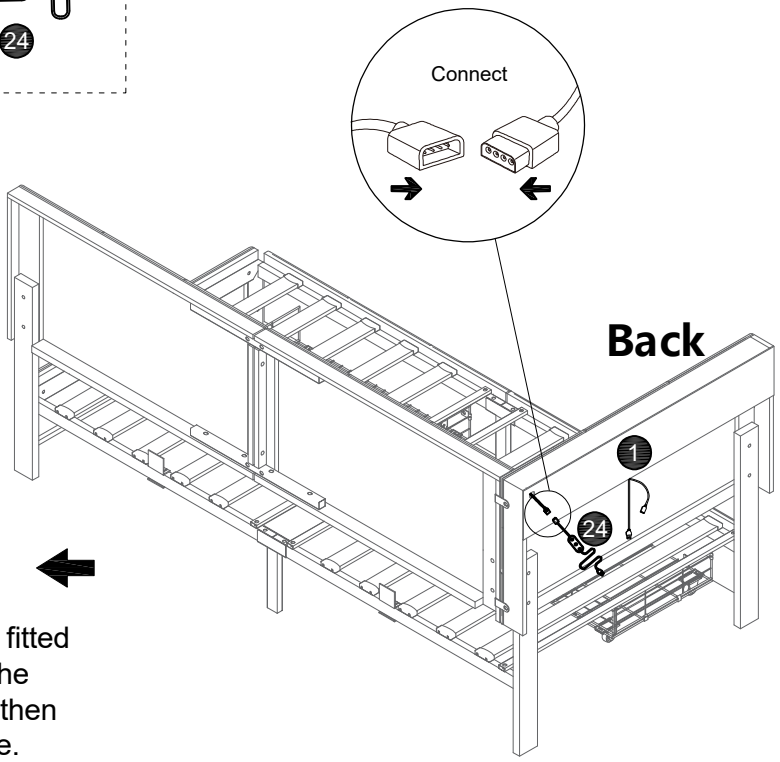

The inner-wall of the bed-head groove is fitted with Velcro. Pass the light strip through the round hole on the back of the bed-head, then attach it onto the Velcro inside the groove.

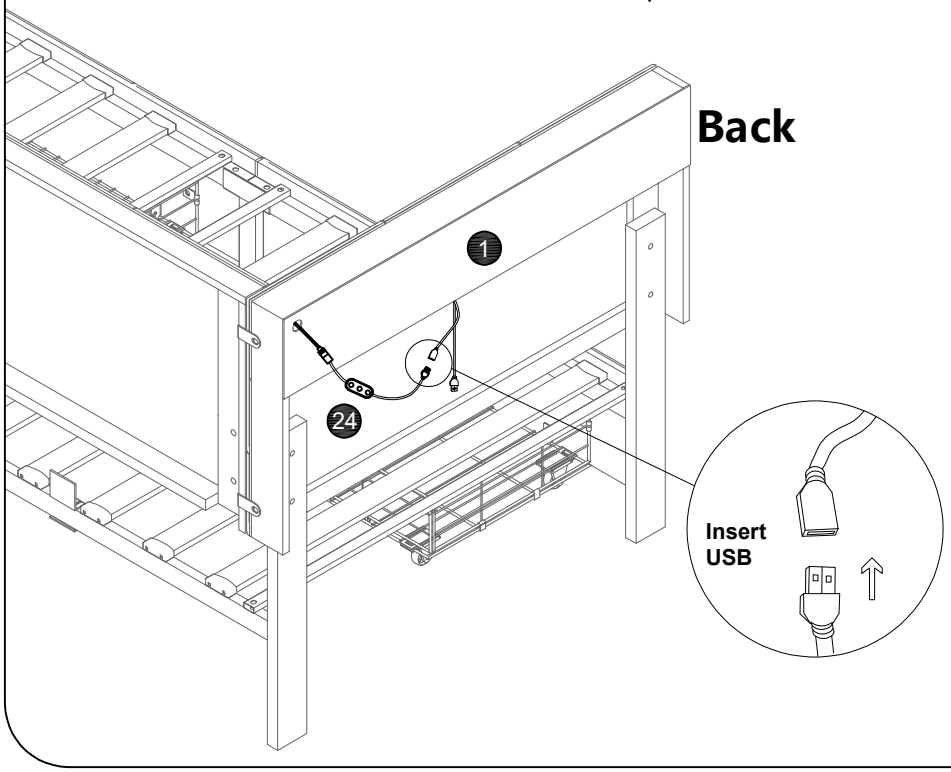

Importer	COMHARBOR LIMITED
Add	Unit C,Swit Point,Cosford Lane,Rugby,CV211PY,GB
Email/URL	harborcomhar@gmail.com
Manufacturer	Guangdong Zhangong Electrical Technology Co., LTD
Add	701, Building 29, Zhifu Garden, Xingtan Town, Shunde District, Foshan City
Email/URL	info@waltek.com.
Product identification	202606
Made in	China
Produt Name: Furniture Power Distrbution Units **ZG-JJY-1UK to -8UK**	
Input AC:220-250V 50/60HZ 10-13A Out Put: DC 5V. 2A	
UK REP	COMHARBOR LIMITED Unit C,Swit Point,Cosford Lane,Rugby,CV211PY,GB harborcomhar@gmail.com

Importer	COMHARBOR LIMITED
Add	Unit C,Swit Point,Cosford Lane,Rugby,CV211PY,GB
Email/URL	harborcomhar@gmail.com
Manufacturer	Dongguan Yihong Hardware Electronics Co.. Ltd
Add	Room 1106.No.2,Shangheng Road, Chang an Town
Email/URL	414564409@qq.com
Product identification	202606
Made in	China
Produt Name: LED Controller Model:YH-284	
Rated voltage: 5 V Rated frequency:50/60Hz Power:15W	
UK REP	COMHARBOR LIMITED Unit C,Swit Point,Cosford Lane,Rugby,CV211PY,GB harborcomhar@gmail.com

Importer	COMHARBOR LIMITED
Add	Unit C,Swit Point,Cosford Lane,Rugby,CV211PY,GB
Email/URL	harborcomhar@gmail.com
Manufacturer	**Shenzhen Hongzhengyu Technology Co., LTD**
Add	Shenzhen baoan dist ict rock street industrial science and technology industrial park of 2 Haitian lanyu 3 5 floor of A
Email/URL	610488898@qq.com
Product identification	202606
Made in	China
Produt Name: LED soft light strip Model:HZY-5050RGB-30D/HZY-5050RGB-60D	
Rated voltage: 5 V Rated frequency:50/60Hz Power:4.5W/M	
UK REP	COMHARBOR LIMITED Unit C,Swit Point,Cosford Lane,Rugby,CV211PY,GB harborcomhar@gmail.com

VERIFICATION OF CONFORMITY

Reference No.	:	**WTN23N07163435E**
Applicant	:	**Guangdong Zhangong Electrical Technology Co., LTD**
Address	:	**701, Building 29, Zhifu Garden, Xingtan Town, Shunde District, Foshan City**
Manufacturer	:	**Same as applicant**
Address	:	**Same as applicant**
Product	:	**Furniture Power Distrbution Units**
Model No.	:	**ZG-JJY-1UK to -8UK, others see attachment**
Technical data	:	**250 Vac, 50 - 60 Hz, 13 A, USB: 5 Vdc, 2 A**

Test Standards:

BS EN IEC 55015:2019+A11:2020
BS EN 61547:2009
BS EN IEC 61000-3-2:2019+A1:2021
BS EN 61000-3-3:2013+A1:2019+A2:2021

The above product has been tested by us with the listed standards and found in compliance with the Electromagnetic Compatibility Regulations 2016 of United Kingdom (S.I. 2016 No.1091). It is possible to use UKCA marking to demonstrate the compliance with the regulations.

BS EN IEC 55015: Limits and methods of measurement of radio disturbance characteristics of electrical lighting and similar equipment
BS EN 61547:Equipment for general lightingpurposes — EMC immunity requirements
BS EN IEC 61000-3-2:Electromagnetic compatibility (EMC)Part 3-2: Limits — Limits for harmonic current emissions (equipment input current ≤16 A per phase)
BS EN 61000-3-3:Electromagnetic compatibility (EMC)Part 3-3: Limits - Limitation of voltage changes, voltage fluctuations and flicker in public low-voltage supply systems, for equipment with rated current ≤ 16 A per phase and not subject to conditional connection

The referred test report(s) show that the product complies with standard(s) recognized as giving presumption of compliance with the essential requirements in the above mentioned UK regulations. Other relevant UK regulations have to be observed.

After preparation of the necessary technical documentation as well as the declaration of conformity, the UKCA marking as shown below can be affixed on the equipment under the sole responsibility of the manufacturer.

UKCA

Manager:Jianzhong Mao
Date:2023-09-05

The statement is based on a single evaluation of the sample of above mentioned product. It does not imply an assessment of the whole production.

Waltek Testing Group (Ningbo) Co., Ltd.

Hotline: 400-840-2288 E-mail: nb@waltek.com.cn
Http://www.waltek.com.cn

Ver.10.22, WALTEK is registered trademark. Utilisation and application requires prior approval.

VERIFICATION OF CONFORMITY

Attachment

Model list

Reference No.: WTN23N07163435E

No.	Model	Rated Input	Max Current	Max Output	Note
1.	ZG-JJY-1	250 Vac, 50 - 60 Hz	13 A	USB: 5 Vdc, 2 A	/
2.	ZG-JJY-1UK	250 Vac, 50 - 60 Hz	13 A	USB: 5 Vdc, 2 A	/
3.	ZG-JJY-2	250 Vac, 50 - 60 Hz	13 A	USB: 5 Vdc, 2 A	/
4.	ZG-JJY-2UK	250 Vac, 50 - 60 Hz	13 A	USB: 5 Vdc, 2 A	/
5.	ZG-JJY-3	250 Vac, 50 - 60 Hz	13 A	USB: 5 Vdc, 2 A	/
6.	ZG-JJY-3UK	250 Vac, 50 - 60 Hz	13 A	USB: 5 Vdc, 2 A	/
7.	ZG-JJY-4	250 Vac, 50 - 60 Hz	13 A	USB: 5 Vdc, 2 A	/
8.	ZG-JJY-4UK	250 Vac, 50 - 60 Hz	13 A	USB: 5 Vdc, 2 A	/
9.	ZG-JJY-5	250 Vac, 50 - 60 Hz	13 A	USB: 5 Vdc, 2 A	/
10.	ZG-JJY-5UK	250 Vac, 50 - 60 Hz	13 A	USB: 5 Vdc, 2 A	/
11.	ZG-JJY-6	250 Vac, 50 - 60 Hz	13 A	USB: 5 Vdc, 2 A	/
12.	ZG-JJY-6UK	250 Vac, 50 - 60 Hz	13 A	USB: 5 Vdc, 2 A	/
13.	ZG-JJY-7	250 Vac, 50 - 60 Hz	13 A	USB: 5 Vdc, 2 A	/
14.	ZG-JJY-7UK	250 Vac, 50 - 60 Hz	13 A	USB: 5 Vdc, 2 A	/
15.	ZG-JJY-8	250 Vac, 50 - 60 Hz	13 A	USB: 5 Vdc, 2 A	/
16.	ZG-JJY-8UK	250 Vac, 50 - 60 Hz	13 A	USB: 5 Vdc, 2 A	/

VERIFICATION OF CONFORMITY

Registration No.	:	**WTN25D04079447**
Reference No.	:	**WTN25D04079447Z**
Applicant	:	**Guangdong Zhangong Electric Technology Co., Ltd.**
Address	:	**Room 701, Building 29, Shunde Zhifu Park, No.8, 2nd Ring Road, Gaozan village committee, Xingtan town, Shunde District, Foshan City, Guangdong Province**
Manufacturer	:	**The same as above**
Address	:	**The same as above**
Product	:	**MountableUSB Hub/USBCHARGER**
Model No.	:	**ZG-USB-O01A, ZG-USB-Y01A, ZG-USB-O02A, ZG-USB-Y02A, ZG-USB-O01B, ZG-USB-Y01B, ZG-USB-O02B, ZG-JJY-1UK to -8UK**
Technical data	:	**See model list**

Test Standards:

BS EN IEC 61558-1:2019

BS EN 61558-2-16:2009+A1:2013

The above product has been tested by us with the listed standards and found in compliance with the Electrical Equipment (Safety) Regulations 2016 of United Kingdom (S.I. 2016 No.1101). It is possible to use UKCA marking to demonstrate the compliance with the regulations.

Safety of power transformers, power supplies, reactors and similar products - Part 1: General requirements and tests
Safety of transformers, reactors, power supply units and similar products for supply voltages up to 1100 V - Part 2-16: Particular requirements and tests for switch mode power supply units and transformers for switch mode power supply units

The referred test report(s) show that the product complies with standard(s) recognized as giving presumption of compliance with the essential requirements in the above mentioned UK regulations. Other relevant UK regulations have to be observed.

After preparation of the necessary technical documentation as well as the declaration of conformity, the UKCA marking as shown below can be affixed on the equipment under the sole responsibility of the manufacturer.

Manager: Deval Qin
Date: 2025-5-30

The statement is based on a single evaluation of the sample of above mentioned product. It does not imply an assessment of the whole production.

Waltek Testing Group Co., Ltd.

Hotline:400-840-2288 **E-mail:info@waltek.com.cn**

Http://www.waltek.com.cn

Ver.03. 26.09.2024, WALTEK is registered trademark. Utilisation and application requires prior approval.

VERIFICATION OF CONFORMITY

Attachment

Model list

Reference No.: WTN25D04079447Z

Model List:

Product name	Model name	Differences
MountableUSB Hub/USBCHARGER	ZG-USB-O01A, ZG-USB-O01B	Input: AC 100V-250V,50/60Hz Type-C Output: 5Vdc 2.1A USB Output: 5Vdc 2.1A Type-C+USB Output: 5Vdc 2.1A EU plug
	ZG-USB-O02A, ZG-USB-O02B	Input: AC 100V-250V,50/60Hz USB Output: 5Vdc 2.1A USB+USB Output: 5Vdc 2.1A EU plug
	ZG-USB-Y01A, ZG-USB-Y01B	Input: AC 100V-250V,50/60Hz Type-C Output: 5Vdc 2.1A USB Output: 5Vdc 2.1A Type-C+USB Output: 5Vdc 2.1A UK plug
	ZG-USB-Y02A, ZG-JJY-1UK to -8UK	Input: AC 100V-250V,50/60Hz USB Output: 5Vdc 2.0A USB+USB Output: 5Vdc 2.0A UK plug

======End of Attachment======

Waltek Testing Group Co., Ltd.

Hotline:400-840-2288 **E-mail:info@waltek.com.cn**

Http://www.waltek.com.cn

Ver.03. 26.09.2024, WALTEK is registered trademark. Utilisation and application requires prior approval.

Declaration of Conformity (DoC)

SI 2012 No. 3032 and its amendment The Restriction of the Use of Certain Hazardous Substances in Electrical and Electronic Equipment Regulations.

The certificate applies to the tested sample following mentioned only and shall not imply an assessment of the whole production, It is only valid in connection with the test report number.

Report No.	:	XNO260105301CX2-1
Certificate No.	:	XNO260105301CX2-1C
Applicant	:	Guangdong Zhangong Electric Technology Co., LTD
Address	:	701, Building 29, zhifuyuan Industrial Zone, Xingtan town, Shunde District, Foshan City, Guangdong Province
Product name	:	Furniture socket
Model No.	:	ZG-JJY-1UK to -8UK
Sub-Model No.	:	ZG-JJY-2, ZG-JJM/12A/15A, ZG-JJM, LH-D, ZG-JJM-A2, ZG-JJM1-A2
Manufacturer	:	Guangdong Zhangong Electric Technology Co., LTD
Address	:	701, Building 29, zhifuyuan Industrial Zone, Xingtan town, Shunde District, Foshan City, Guangdong Province
Test method	:	BS EN 62321-3-1:2014 & BS EN 62321-5:2014 & BS EN 62321-4:2014+A1:2017& BS EN 62321-7-1:2015 & BS EN 62321-7-2:2017 & BS EN 62321-6:2015 & BS EN 62321-8:2017

UKCA

Signature :.....

Technical supervisor

Signed for and on behalf of

Guangzhou Supreme Technology & Testing Service Co., Ltd

09-Jan-2026

This certification is part of the full test report(s) and should be read in conjunction with it. The certificate is based on a single evaluation of one sample of above-mentioned products. It does not imply an assessment of the whole production and does not permit the use of the test lab logo.

Guangzhou Supreme Technology & Testing Service Co., LTD

103, NanSha IT Park, South Tower, No.2 Huanshi Dadao Nan, NanSha District, GuangZhou City, GuangDong Province.China

Tel: 020-39004143 Fax: 020-39390517 Email: service@xnotesting.com Website: http://www.xnotesting.com

精准检测
PRECISE TESTING

CERTIFICATE OF CONFORMITY

No.: PTC25102309602C-EN01V02

Applicant	:	**Dongguan Yihong Hardware electronics Co., LTD**
Address	:	**Room 901, No. 2, Shangheng Road, Chang'an Town, Dongguan City, Guangdong Province, 523880 China**
Manufacturer	:	**Dongguan Yihong Hardware electronics Co., LTD**
Address	:	**Room 901, No. 2, Shangheng Road, Chang'an Town, Dongguan City, Guangdong Province, 523880 China**
Product Name	:	**LED Controler**
Model No.	:	**YH-289,YH-980 ,YH-284 ,YH-917 ,YH-818,YH-816,YH-6181,YH-358**

The submitted sample of the above equipment has been tested and found to comply with the following European Directive:

RoHS Directive 2011/65/EU & EU No.2015/863

The standard(s) used for showing compliance with the essential requirements:

Applicable Standard(s)	Test Report(s) Number
IEC 62321-1:2013, IEC 62321-2:2021 IEC 62321-3-1:2013, IEC 62321-3-2:2020 IEC62321-4: 2013+AMD1:2017 IEC 62321-5:2013 IEC 62321-6:2015, IEC 62321-7-1: 2015 IEC 62321-7-2: 2017, IEC 62321-8:2017	**PTC25102309602C-EN01V02**

This certificate is part of the full test report(s) and should be read in conjunction with it. This certificate is based on an evaluation of one sample of above mentioned product. It does not imply assessment of the production of the product. Without the written approval of Precise Testing & Certification (Guangdong) Co., Ltd., this certificate is not permitted to be reproduced, except in full. It is not permitted to use the test lab's logo.

RoHS

PRECISE TESTING & CERTIFICATION (GUANGDONG) CO., LTD.

Jacky Ou
Manager
Date:Dec. 11, 2025

Precise Testing & Certification (Guangdong) Co., Ltd.
Building 1, No.6, Tongxin Road, Dongcheng Street,
Dongguan, Guangdong, China
Tel: 86 769 38808222 Web:www.ptc-testing.com
Mail: inquiry@ptc-testing.com

Certificate – Сертификат – 證明書 – Certificat – 증명서 – شهادة

Shenzhen ZKT Technology Co., Ltd.
1/F, No. 101, Building B, No. 6, Tangwei Community Industrial Avenue,
Fuhai Street, Bao'an District, Shenzhen, China

Certificate of Compliance

Certificate Number: ZKT-25070215184C

Certificate's Holder	:	**Dongguan Yihong Hardware Electronics Co., Ltd Room 1106, No.2, Shangheng Road, Chang'an Town, Dongguan**
Manufacturer	:	**Dongguan Yihong Hardware Electronics Co., Ltd Room 1106, No.2, Shangheng Road, Chang'an Town, Dongguan**
Trade Mark	:	**N/A**
Product	:	**LED controller**
Model(s)	:	**YH-6183 YH-252, YH-284, YH-290, YH-287, YH-358, YH-360, YH-6180, YH-6184**

Requirement	Standard	Report No.
Art.3.1(a) Safety	BS EN IEC 62368-1:2024+A11:2024	ZKT-25070215185S
Art.3.1(a) Health	BS EN IEC 62311:2020 BS EN 50665:2017	ZKT-25070215184E-1
Art.3.1(b) EMC	ETSI EN 301 489-1 V2.2.3 (2019-11) ETSI EN 301 489-17 V3.3.0 (2024-07)	ZKT-25070215184E-2
Art.3.2 Radio	ETSI EN 300 328 V2.2.2 (2019-07)	ZKT-25070215184E-3

This Attestation of Compliance is issued on a voluntary basis for electrical equipment below the voltage limits of Radio Equipment Directive (RED) 2014/53/EU. The essential requirement are fulfilled accordingly based on the technical specifications applicable at the time of issuance.

UK CA

Shenzhen ZKT Technology Co., Ltd.
Approved
Manager
Jul. 07, 2025

This Certificate of Conformity is based on single evaluation of the submitted sample(s) of the above mentioned product. It does not imply an assessment of the whole product and relevant . Directives to be observed.

精准检测
PRECISE TESTING

VERIFICATION OF CONFORMITY

No.	:	PTC25121907701E-EM01
Applicant	:	Dongguan Yihong Hardware electronics Co., LTD
Address	:	Room 1106,NO.2 Shangheng Road,Chang'an Town Dongguan,Guangdong ,523880 China
Manufacturer	:	Dongguan Yihong Hardware electronics Co., LTD
Address	:	Room 1106,NO.2 Shangheng Road,Chang'an Town Dongguan,Guangdong ,523880 China
Factory	:	Dongguan Yihong Hardware electronics Co., LTD
Address	:	Room 1106,NO.2 Shangheng Road,Chang'an Town Dongguan,Guangdong ,523880 China
Product	:	LED controller
Trade Mark	:	-
Model	:	YH-358,YH-284, YH-6181,YH-6183
Ratings	:	Input: DC 5V,6000mA,Output: DC 5V,6000mA

The submitted sample of the above equipment has been tested and found to comply with the following European Directive:

Electromagnetic Compatibility Directive (EMC) - 2014/30/EU

The standard(s) used for showing compliance with the essential requirements:

Applicable Standard(s)	Test Report(s) Number
EN IEC 55015:2019+A11:2020 **EN IEC 61547:2023** **EN IEC 61000-3-2:2019+A1:2021+A2:2024** **EN 61000-3-3:2013+A1:2019+A2:2021**	**PTC25121907701E-EM01**

This verification is part of the full test report(s) and should be read in conjunction with it. This verification is based on an evaluation of one sample of above mentioned product. It does not imply assessment of the production of the product.Without the written approval of Precise Testing & Certification (Guangdong) Co., Ltd., this verification is not permitted to be reproduced, except in full. It is not permitted to use the test lab's logo.

Provided that other applicable Directive requirements are satisfied, the manufacturer (or the European authorized representative), may draw up an EC/EEA Declaration of Conformity and affix the CE-marking to each conforming product.

PRECISE TESTING & CERTIFICATION (GUANGDONG) CO., LTD.

Jacky Ou
Manager
Date: 2025-12-23

Precise Testing & Certification(Guangdong)Co.,Ltd.
Tel: 0769-38808222 Wet: www.ptc-testing.com E-mail: inquiry@ptc-testing.com
Add: No.6 Tongxin Road,Dongcheng Street,Dongugan,Guangdong,China

Verification of compliance Verification of compliance Verification of compliance

Attestation of Compliance

Verification No.:	MK25120114P01-C02
Name and address of Applicant:	**Shenzhen Hongzhengyu Technology Co., LTD** 5th Floor, Building 2, Haitian Lanyu Technology Industrial Park, 5 Industrial 2nd Road, Shilong Community, Shiyan Subdistrict, Bao'an District, Shenzhen City
Name and address of Manufacturer:	**Shenzhen Hongzhengyu Technology Co., LTD** 5th Floor, Building 2, Haitian Lanyu Technology Industrial Park, 5 Industrial 2nd Road, Shilong Community, Shiyan Subdistrict, Bao'an District, Shenzhen City
Product name:	**LED Slide Strip**
Product model(s):	HZY-5050RGB-60D-5V, HZY-2835-120D-12V, HZY-2835-30D-5V, HZY-2835-60D-5V, HZY-2835-120D-5V, HZY-2835-60D-12V, HZY-2835-60D-24V, HZY-2835-120D-24V, HZY-2835RGB-60D-5V, HZY-2835RGB-60D-12V, HZY-5050-30D-5V, HZY-5050-60D-5V, HZY-5050-30D-12V, HZY-5050-60D-12V, HZY-5050-60D-24V, HZY-5050RGB-30D-5V, HZY-5050RGB-60D-5V, HZY-5050RGB-30D-12V, HZY-5050RGB-60D-12V, HZY-5050RGB-60D-24V
Product trademark:	HZY

This Attestation of Compliance confirms that the product meets the requirements of the following standard

BS IEC 62321-1:2013	BS IEC 62321-3-1:2013
BS IEC 62321-4:2013/AMD1:2017	BS IEC 62321-5:2013
BS IEC 62321-6:2015	BS IEC 62321-7-1:2015
BS IEC 62321-7-2:2017	BS IEC 62321-8:2017
BS IEC 62321-2:2021	

The Attestation of Compliance has been carried out in accordance with individual rules and conditions agreed with the applicant. Evaluation has been carried out in accordance with:

Test report(s) No.:	MK25120114P01-C02
Test conducted by:	TMC Testing Services (Shenzhen) Co., Ltd.
Verification issue date:	December 30, 2025

Notes:

This Attestation of Compliance is issued according to the UK RoHS Restriction of the Use of Certain Hazardous Substances in Electrical and Electronic Equipment Regulations 2021(SI 2012 No.3032). It confirms that the listed products complies with all essential requirements of the Regulations and applies only to the sample and its technical documentation to TMC Testing Services (Shenzhen) Co., Ltd. for testing.

After preparation of the necessary technical documentation (which must be kept for up 10 years after the product is placed on the GB market) as well as the UK Declaration of Conformity, the required UKCA marking can be affixed on the product. Other relevant Regulations have to be observed.

TMC Testing Services (Shenzhen) Co., Ltd.

t:86-755-86642861 cert@tmc-lab.com www.tmc-lab.com

1st Floor, Block A1, Zone A, Xinshidai Gongrong Industrial Park, No. 2, Shihuan Road, Shiyan Street, Baoan District, Shenzhen, China

Bauart geprüft TMC Access to global market Product Safety approved

Lab Director

Vivian Jiang

UKCA

Verification of compliance Verification of compliance Verification of compliance Verification of compliance

Verification of Compliance

Verification No.:	MK25120114P03-R01
Name and address of Applicant:	**Shenzhen Hongzhengyu Technology Co., LTD** 5th Floor, Building 2, Haitian Lanyu Technology Industrial Park, 5 Industrial 2nd Road, Shilong Community, Shiyan Subdistrict, Bao'an District, Shenzhen City
Name and address of Manufacturer:	**Shenzhen Hongzhengyu Technology Co., LTD** 5th Floor, Building 2, Haitian Lanyu Technology Industrial Park, 5 Industrial 2nd Road, Shilong Community, Shiyan Subdistrict, Bao'an District, Shenzhen City
Product name:	**LED Slide Strip**
Rated:	Input:100-240V~ 50/60Hz 0.6A Max Output:5V ⎓
Product model(s):	HZY-5050RGB-60D-5V, HZY-2835-120D-12V, HZY-2835-30D-5V, HZY-2835-60D-5V, HZY-2835-120D-5V, HZY-2835-60D-12V, HZY-2835-60D-24V, HZY-2835-120D-24V, HZY-2835RGB-60D-5V, HZY-2835RGB-60D-12V, HZY-5050-30D-5V, HZY-5050-60D-5V, HZY-5050-30D-12V, HZY-5050-60D-12V, HZY-5050-60D-24V, HZY-5050RGB-30D-5V, HZY-5050RGB-60D-5V, HZY-5050RGB-30D-12V, HZY-5050RGB-60D-12V, HZY-5050RGB-60D-24V
Product trademark:	HZY

This Attestation of Compliance confirms that the product meets the requirements of the following standard.

Requirement		Standard	Report No.
Art.3.1(a)	Safety	BS EN 60598-2-21:2015; BS EN IEC 60598-1:2021+A11:2022	MK25120114P03-S01
Art.3.1(a)	Health	BS EN 62479:2010 BS EN50663:2017	MK25120114P03-H01
Art.3.1(b)	EMC	ETSI EN301 489-1 V 2.2.3 (2019-11) ETSI EN 301 489-17 V3.3.1 (2024-09)	MK25120114P03-E01
Art.3.2	Radio	ETSI EN 300 328 V2.2.2(2019-07)	MK25120114P03-RF01

Notes:

This Attestation of Compliance is issued according to the Great Britain legislation Radio Equipment Regulations 2017(SI 2017 No.1206). It confirms that the listed products complies with all essential requirements of the Regulations and applies only to the sample and its technical documentation to TMC Testing Services (Shenzhen) Co., Ltd. for testing.

After preparation of the necessary technical documentation (which must be kept for up 10 years after the product is placed on the GB market) as well as the UK Declaration of Conformity, the required UKCA marking can be affixed on the product. Other relevant Regulations have to be observed.

TMC Testing Services (Shenzhen) Co., Ltd.

t:86-755-86642861 cert@tmc-lab.com www.tmc-lab.com

1st Floor, Block A1, Zone A, Xinshidai Gongrong Industrial Park, No. 2, Shihuan Road, Shiyan Street, Baoan District, Shenzhen, China

Bauart geprüft TMC Access to global market Product Safety

Lab Director

Vivian Jiang

January 6, 2026

Attestation of compliance Attestation of compliance Attestation of compliance

Verification of Compliance

Attestation No.:	MK25120114P03-S02
Name and address of Applicant:	**Shenzhen Hongzhengyu Technology Co., LTD** 5th Floor, Building 2, Haitian Lanyu Technology Industrial Park, 5Industrial 2nd Road, Shilong Community, Shiyan Subdistrict, Bao'anDistrict, Shenzhen City
Name and address of Manufacturer:	**Shenzhen Hongzhengyu Technology Co., LTD** 5th Floor, Building 2, Haitian Lanyu Technology Industrial Park, 5Industrial 2nd Road, Shilong Community, Shiyan Subdistrict, Bao'anDistrict, Shenzhen City
Product name:	**LED Slide Strip**
Rated：	Input: AC100-240V, 50/60Hz Output: DC5V, 3A
Product model(s):	HZY-5050RGB-60D-5V, HZY-2835-120D-12V, HZY-2835-30D-5V, HZY-2835-60D-5V, HZY-2835-120D-5V, HZY-2835-60D-12V, HZY-2835-60D-24V, HZY-2835-120D-24V, HZY-2835RGB-60D-5V, HZY-2835RGB-60D-12V, HZY-5050-30D-5V, HZY-5050-60D-5V, HZY-5050-30D-12V, HZY-5050-60D-12V, HZY-5050-60D-24V, HZY-5050RGB-30D-5V, HZY-5050RGB-60D-5V, HZY-5050RGB-30D-12V, HZY-5050RGB-60D-12V, HZY-5050RGB-60D-24V
Product trademark:	HZY

This Attestation of Compliance confirms that the product meets the requirements of the following standard.

BS EN 60598-2-21:2015
BS EN IEC 60598-1:2021+A11:2022

The Attestation has been carried out in accordance with individual rules and conditions agreed with the applicant. Evaluation has been carried out in accordance with:

Test report(s) No.:	MK25120114P03-S02
Test conducted by:	TMC Testing Services (Shenzhen) Co., Ltd.
Attestation issue date:	December 31, 2025

Notes:
This Attestation of Compliance is issued according to the Great Britain legislation Electrical Equipment（Safety）Regulations 2016（SI 2016 No. 1101）. It confirms that the listed products complies with all essential requirements of the Regulations and applies only to the sample and its technical documentation to TMC Testing Services (Shenzhen) Co., Ltd. for testing.
After preparation of the necessary technical documentation (which must be kept for up 10 years after the product is placed on the GB market) as well as the UK Declaration of Conformity, the required UKCA marking can be affixed on the product. Other relevant Regulations have to be observed.

TMC Testing Services (Shenzhen) Co., Ltd.
t:86-755-86642861 cert@tmc-lab.com www.tmc-lab.com
1/F. of Building A1, 5/F. of Building B1, & 1/F. of Building A3, Xinshidai Gongrong Industrial Park, No.2, Shihuan Road, Shilong Community, Shiyan Subdistrict, Bao'an District, Shenzhen, Guangdong, China

Peter Luo

Baut geprüft TMC Product Safety Type approved

Lab Direc
Peter Luo

UKCA

Verification of compliance Verification of compliance Verification of compliance

TMC
Access to global market

Verification of Compliance

Verification No.:	MK25120114P01-E02
Name and address of Applicant:	**Shenzhen Hongzhengyu Technology Co., LTD** 5th Floor, Building 2, Haitian Lanyu Technology Industrial Park, 5 Industrial 2nd Road, Shilong Community, Shiyan Subdistrict, Bao'an District, Shenzhen City
Name and address of Manufacturer	**Shenzhen Hongzhengyu Technology Co., LTD** 5th Floor, Building 2, Haitian Lanyu Technology Industrial Park, 5 Industrial 2nd Road, Shilong Community, Shiyan Subdistrict, Bao'an District, Shenzhen City
Product name:	**LED Slide Strip**
Rated:	Input:100-240V~ 50/60Hz 0.6A Max Output:5V ⎓
Product model(s):	HZY-5050RGB-60D-5V, HZY-2835-120D-12V, HZY-2835-30D-5V, HZY-2835-60D-5V, HZY-2835-120D-5V, HZY-2835-60D-12V, HZY-2835-60D-24V, HZY-2835-120D-24V, HZY-2835RGB-60D-5V, HZY-2835RGB-60D-12V, HZY-5050-30D-5V, HZY-5050-60D-5V, HZY-5050-30D-12V, HZY-5050-60D-12V, HZY-5050-60D-24V, HZY-5050RGB-30D-5V, HZY-5050RGB-60D-5V, HZY-5050RGB-30D-12V, HZY-5050RGB-60D-12V, HZY-5050RGB-60D-24V
Product trademark:	HZY

This Attestation of Compliance confirms that the product meets the requirements of the following standard.

BS EN IEC 55015:2019+A11:2020

BS EN IEC 61547:2023

BS EN IEC 61000-3-2:2019+A1:2021+A2:2024

BS EN 61000-3-3:2013+A1:2019+A2:2021

The verification has been carried out in accordance with individual rules and conditions agreed with the applicant. Evaluation has been carried out in accordance with:

Test report(s) No.:	MK25120114P01-E02
Test conducted by:	TMC Testing Services (Shenzhen) Co., Ltd.
Verification issue date:	December 30, 2025

Notes:

This Attestation of Compliance is issued according to the Great Britain legislation Electromagnetic Compatibility Regulations 2016(SI 2016 No.1091) It confirms that the listed products complies with all essential requirements of the Regulations and applies only to the sample and its technical documentation to TMC Testing Services (Shenzhen) Co., Ltd. for testing.

After preparation of the necessary technical documentation (which must be kept for up 10 years after the product is placed on the GB market) as well as the UK Declaration of Conformity, the required UKCA marking can be affixed on the product. Other relevant Regulations have to be observed.

TMC Testing Services (Shenzhen) Co., Ltd.
t:86-755-86642861 cert@tmc-lab.com www.tmc-lab.com
1st Floor, Block A1, Zone A, Xinshidai Gongrong Industrial Park, No. 2, Shihuan Road, Shiyan Street, Baoan District, Shenzhen, China

Bauart geprüft
TMC
Access to global market
Product Safety
Type approved

Lab
Vivian Jiang

UK CA