# ASSEMBLY INSTRUCTIONS

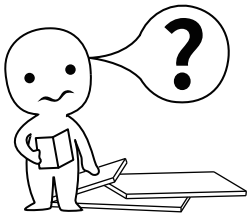

## IMPORTANT INFORMATION!

please read the entire manual before starting to assemble or using this product.follow the manual thoroughly and keep it for further reference.

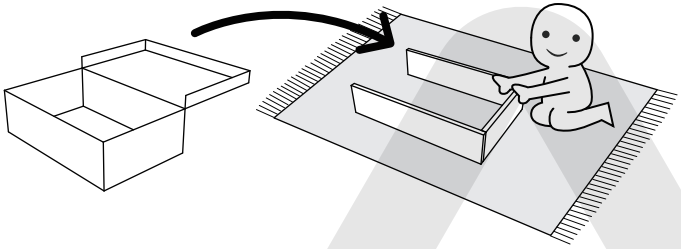

## AVOID SCRATCHES!

In order to avoid scratching this furnuture should be assembled on a soft layer-could be a rug.

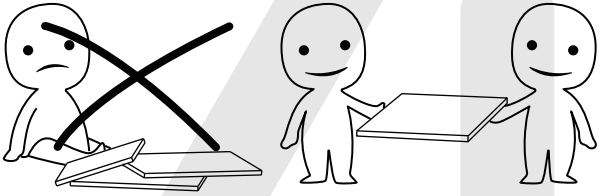

## IMPROVE EFFICIENCY !

Try to find a partner to install with you, which can speed up the installation efficiency and shorten the time.

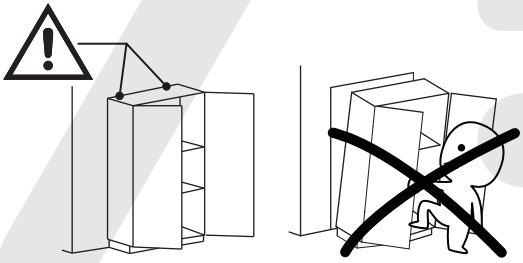

## ANTI-TOPPLE WARNING !

Overturned furniture can cause serious or fatal crush injuries. To prevent tipping over, be sure to use the wall attachment, if not included with this product. Please purchase the wall attachment that fit your wall. If unsure, seek professional advice. Please read and follow each step of the instructions carefully.

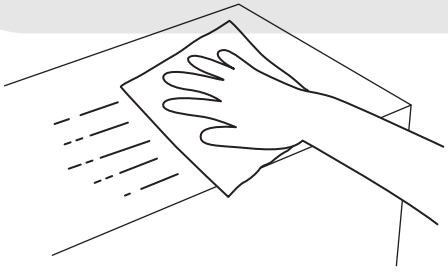

## MAINTENANCE AND CLEANING !

For regular maintenance and cleaning of the product, for the frame, please use a rag dippedin neutral detergent to fully wipe it, and then dry it with a clean rag.For glass materials, wipewith a rag dampened with water glass cleaner, and then dry with a dry rag.

The following installation steps are quite common and require correct operation during the installation process. Incorrect use can damage furniture

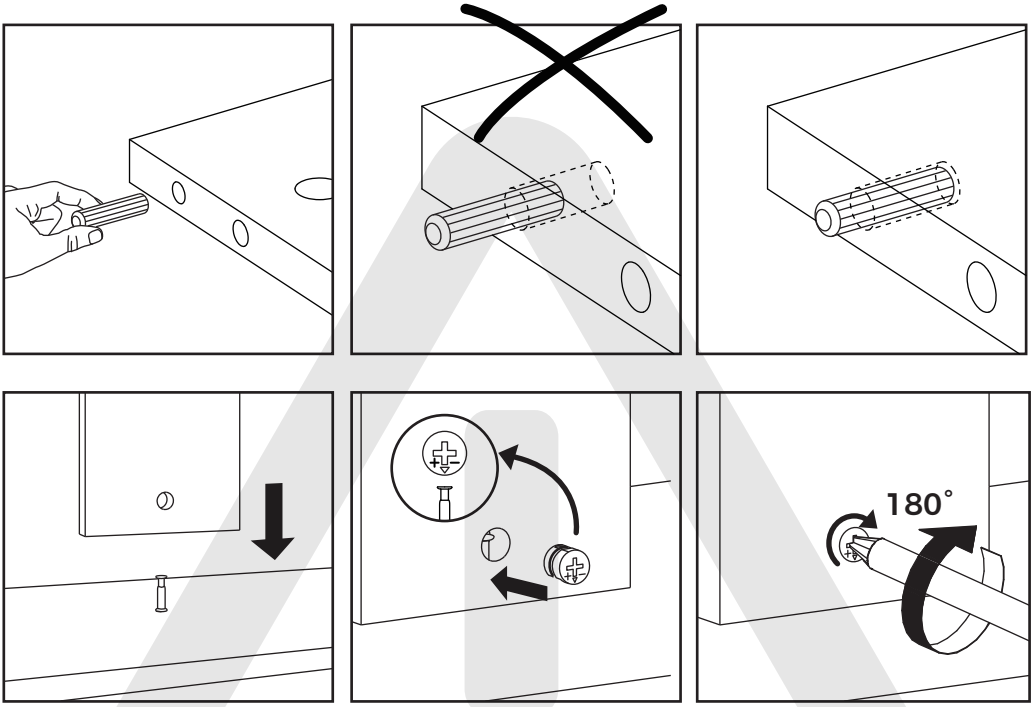


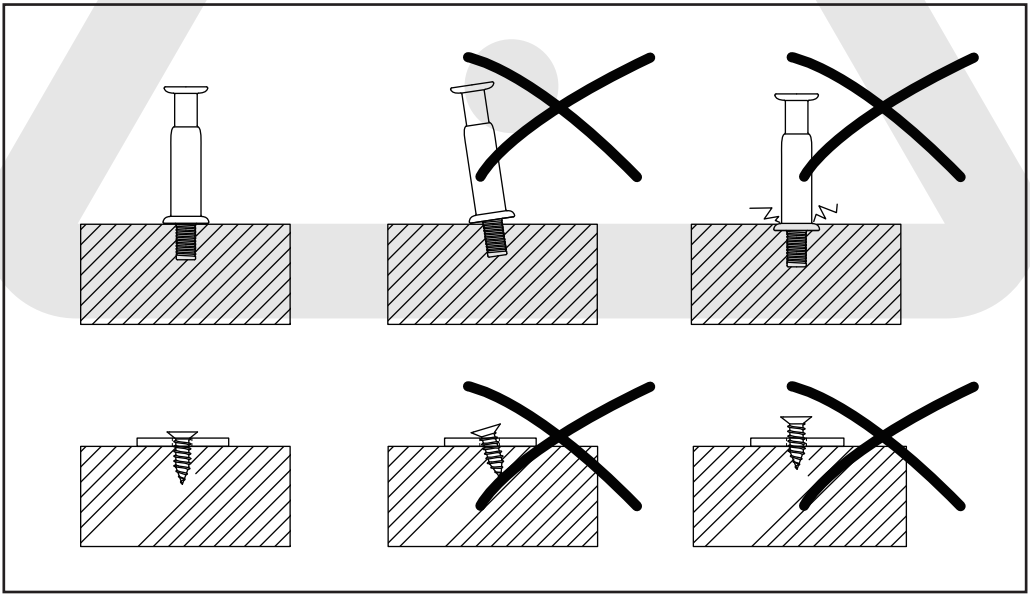

## Please prepare the following tools

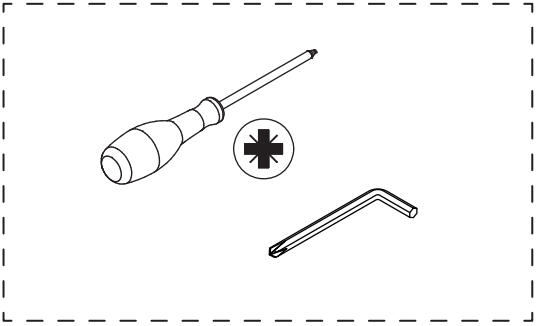

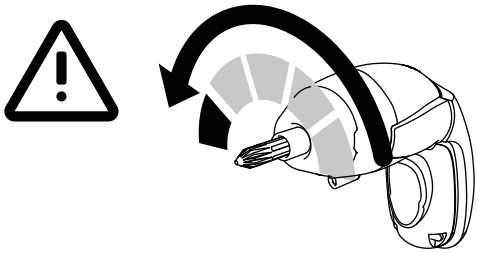

If you choose to use power tools, set it to the slower setting.Be careful! Power tools can cause cracking or damage to the furniture, they can also damage the hardware.

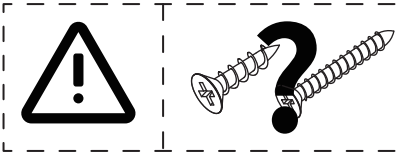

Some accessories have the same shape, please distinguish them according to their numbers and sizes during installation.

| A x 46 | B x 30 | C x 26 | D x 1 | E x 4 |
|---|---|---|---|---|
| | 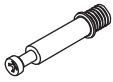 | 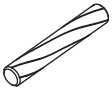 | | 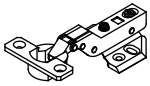 |

| F x 2 | H x 4 | J x 4 | K x 1 | L x 2 |
|---|---|---|---|---|
| 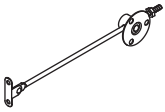 | 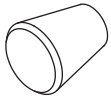 | | 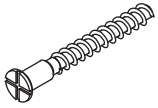 | 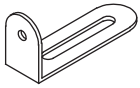 |

| M x 2 | N x 2 | P x 22 | Q x 14 |
|---|---|---|---|
| 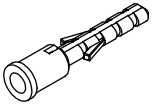 | 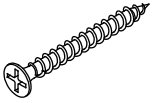 | | |

# Parts List

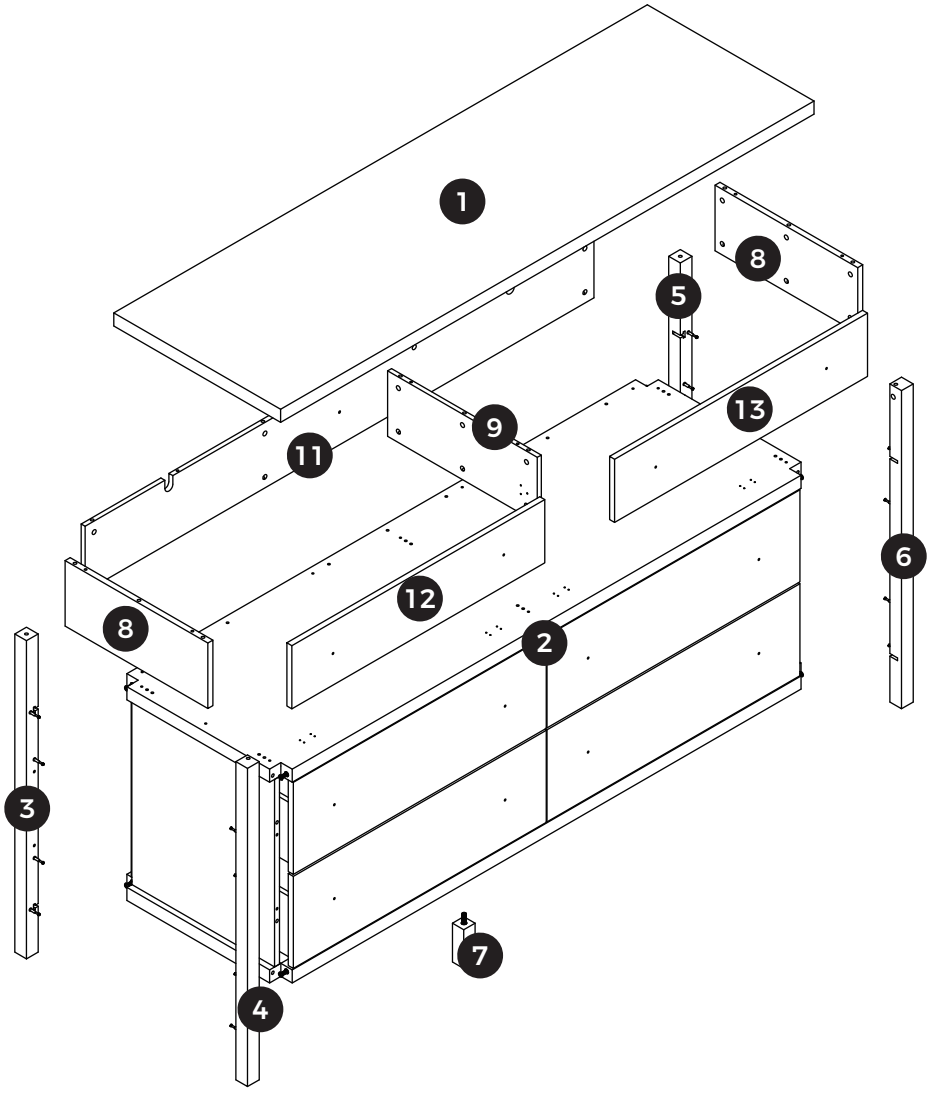


## ⚠WARNING

**Children have died from furniture tipover.To reduce the risk of furniture tipover:**

- ALWAYS install Anti-tip device provided
- NEVER put a TV on this product.
- NEVER allow children to stand,climb or hang on drawers,doors,or shelves.
- NEVER open more than one drawer at a time.
- Place heaviest items in the lowest drawers.

**This is a permanent label.**
**Do not remove!**

60 MINUTES

2 OF ADULTS

EASY

# 01

Pull out the drawer.

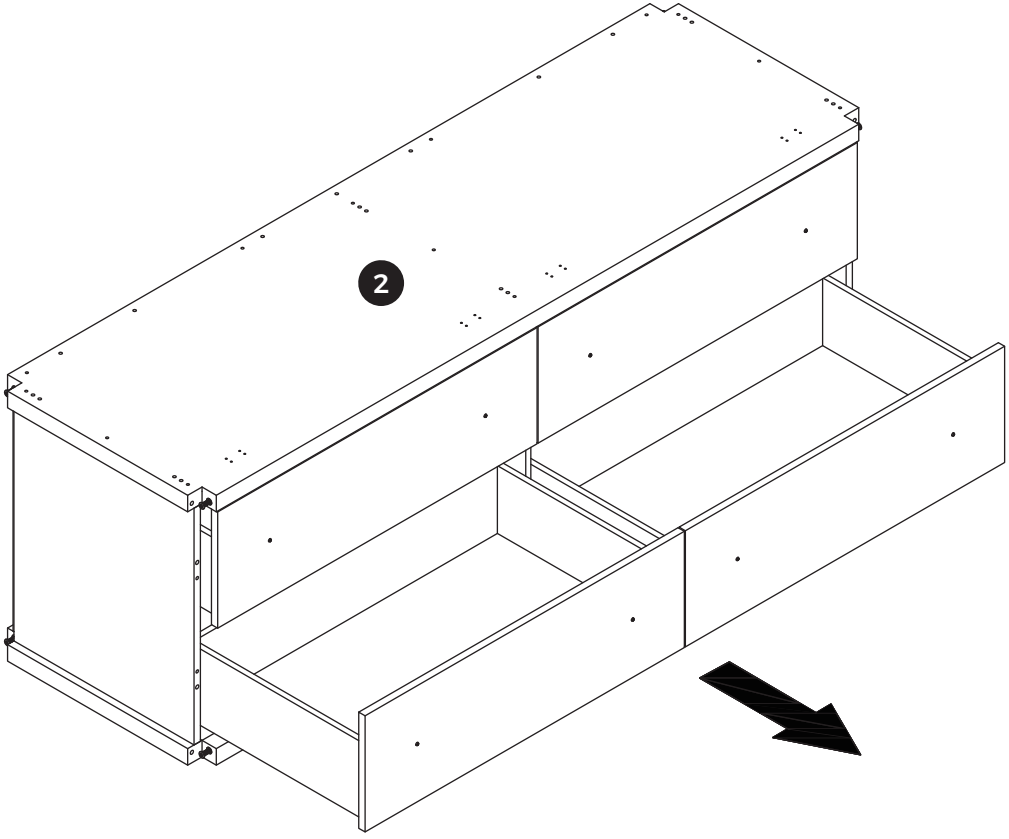

# 02

Remove the handle.

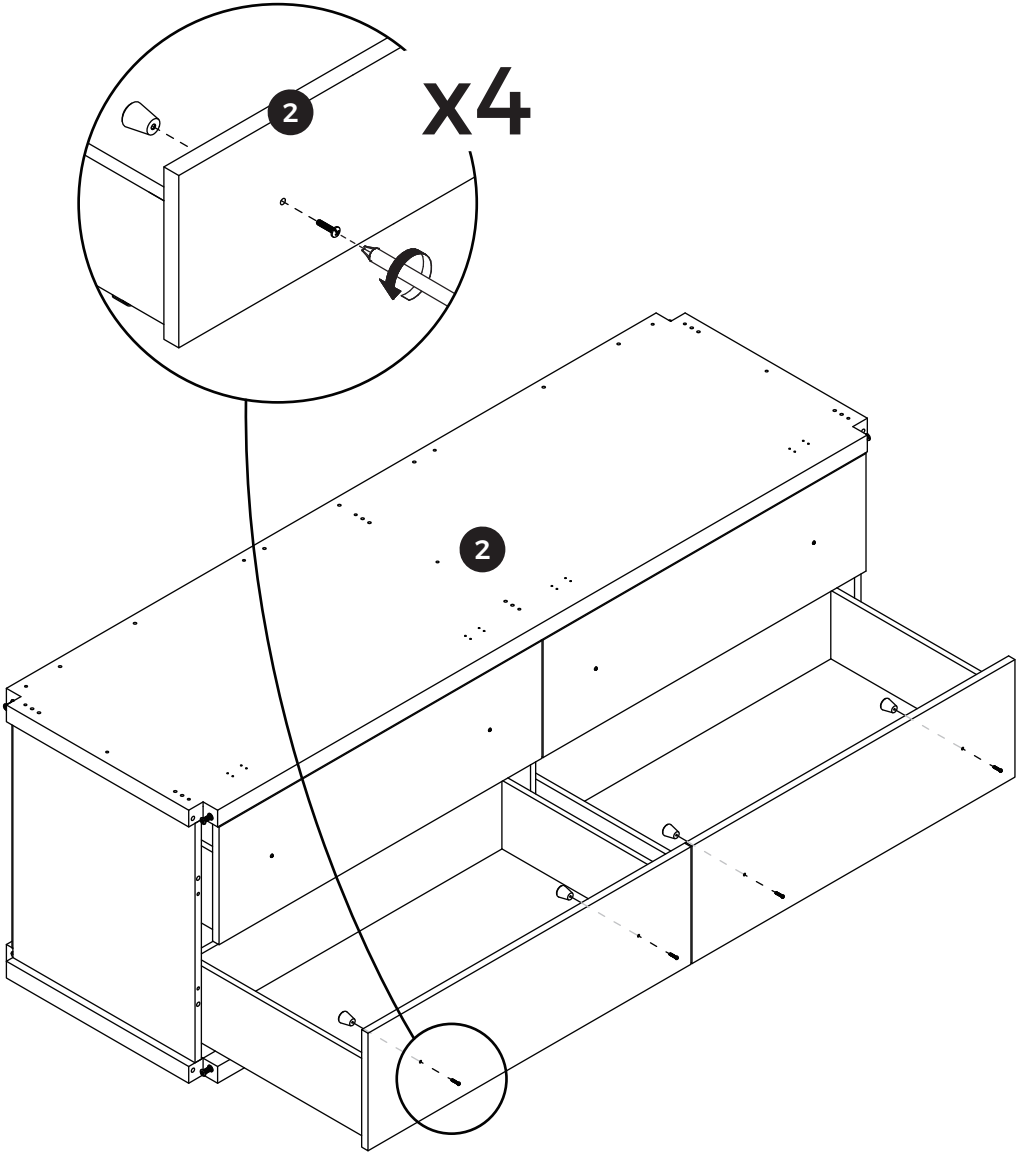

# 03

Install the handle in the reversed direction.

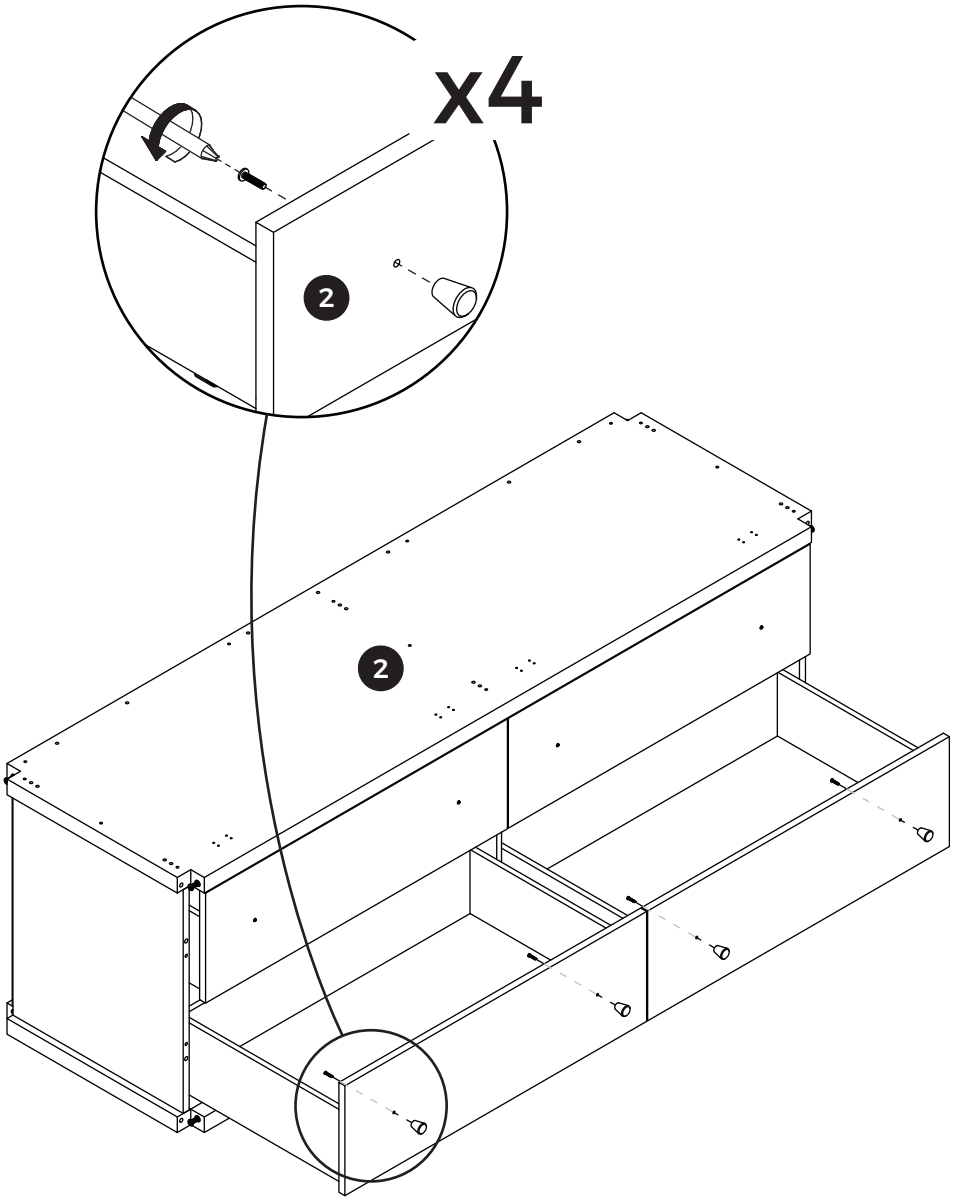

# 04

Push aside the clips of the slide rail.

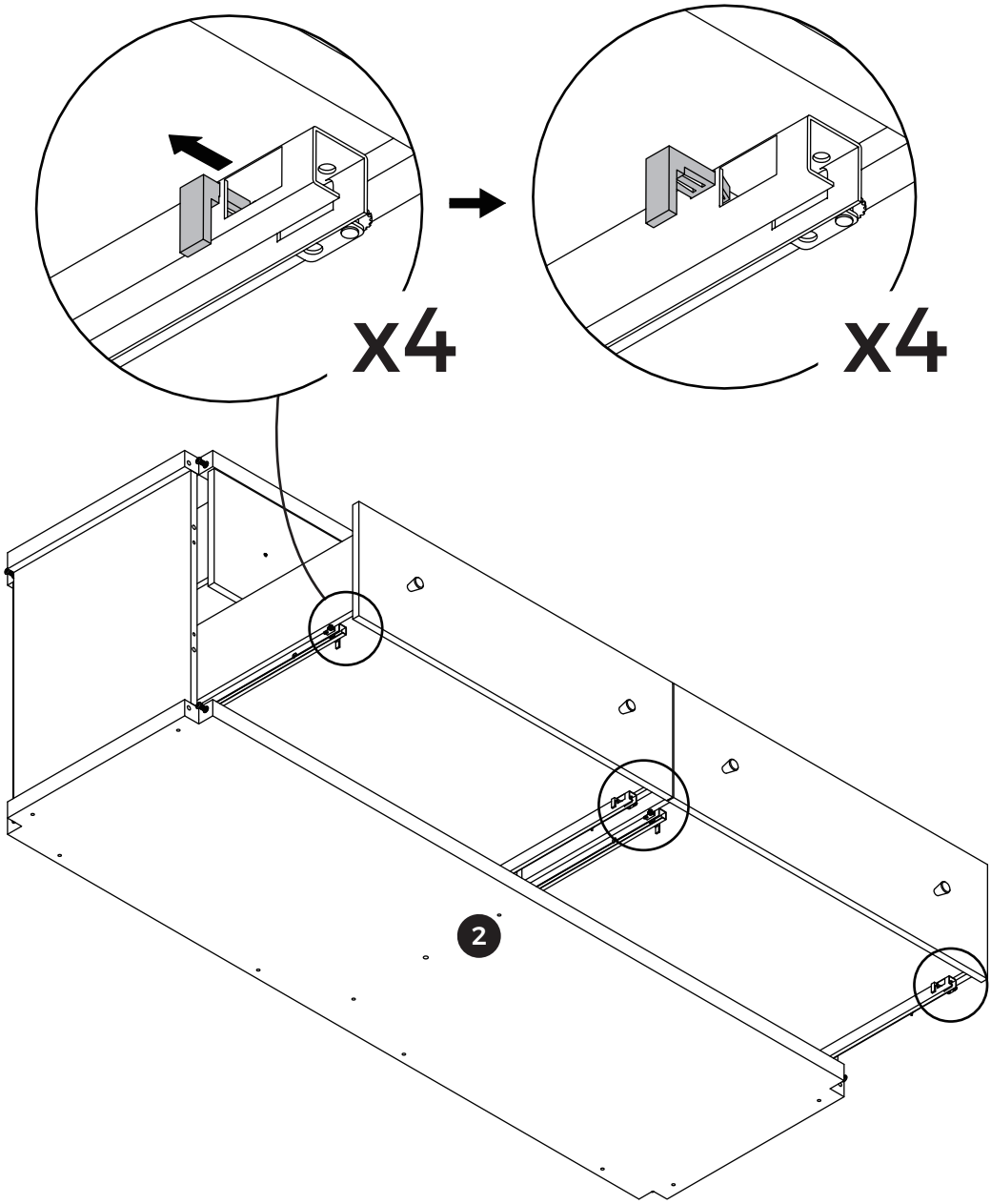

# 05

Take down the drawer.

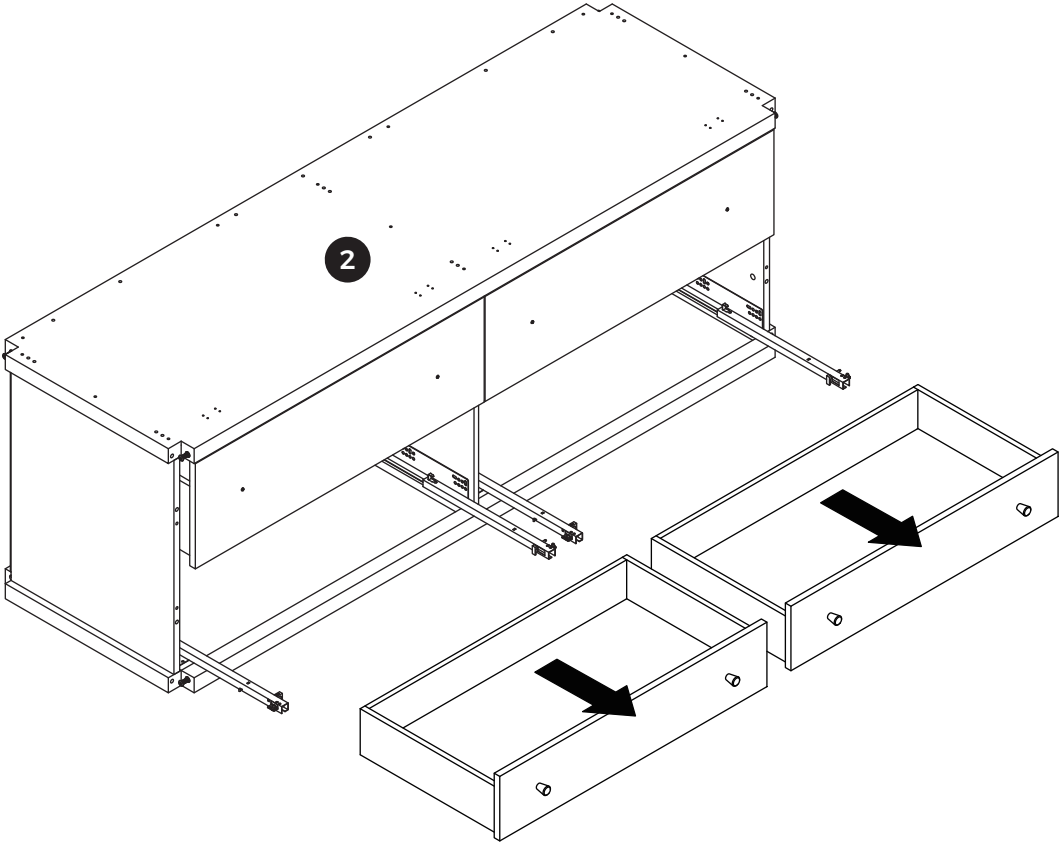

# 06

Pull out the drawer.

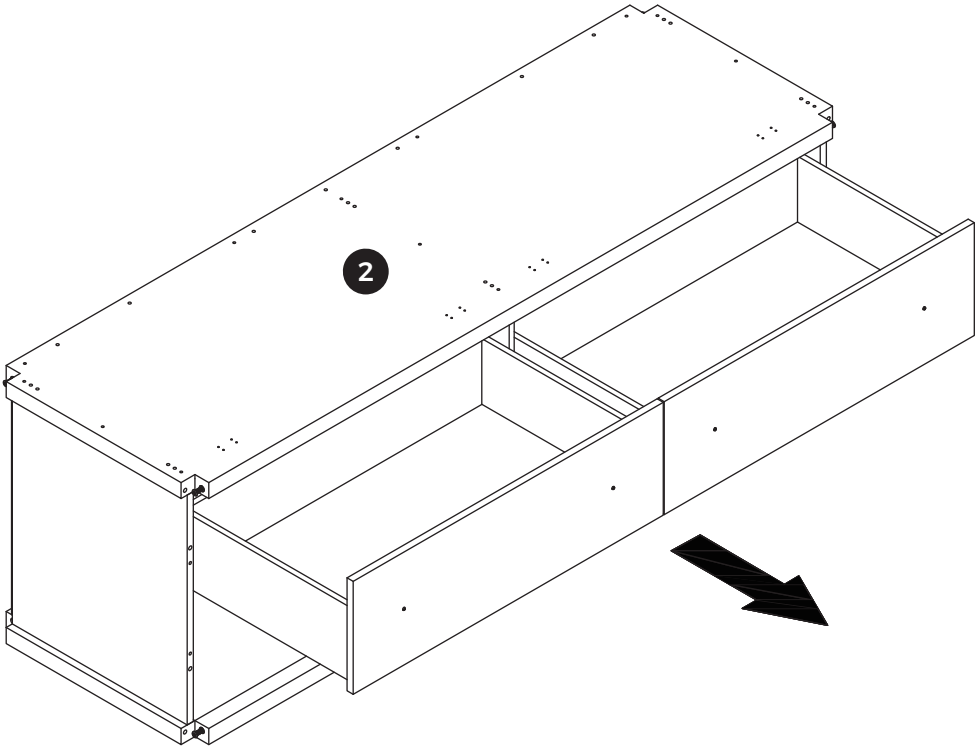

# 07

Remove the handle.

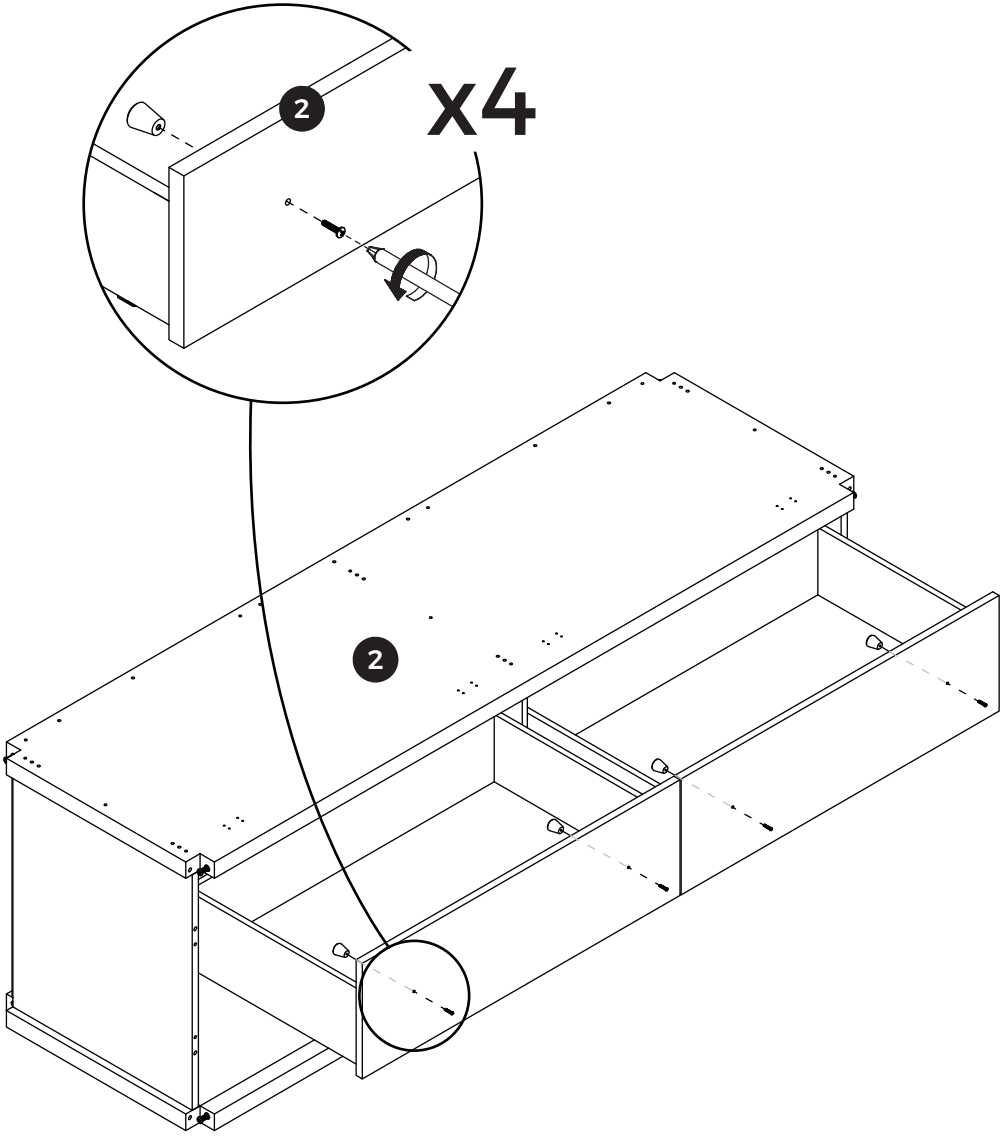

# 08

Install the handle in the reversed direction.

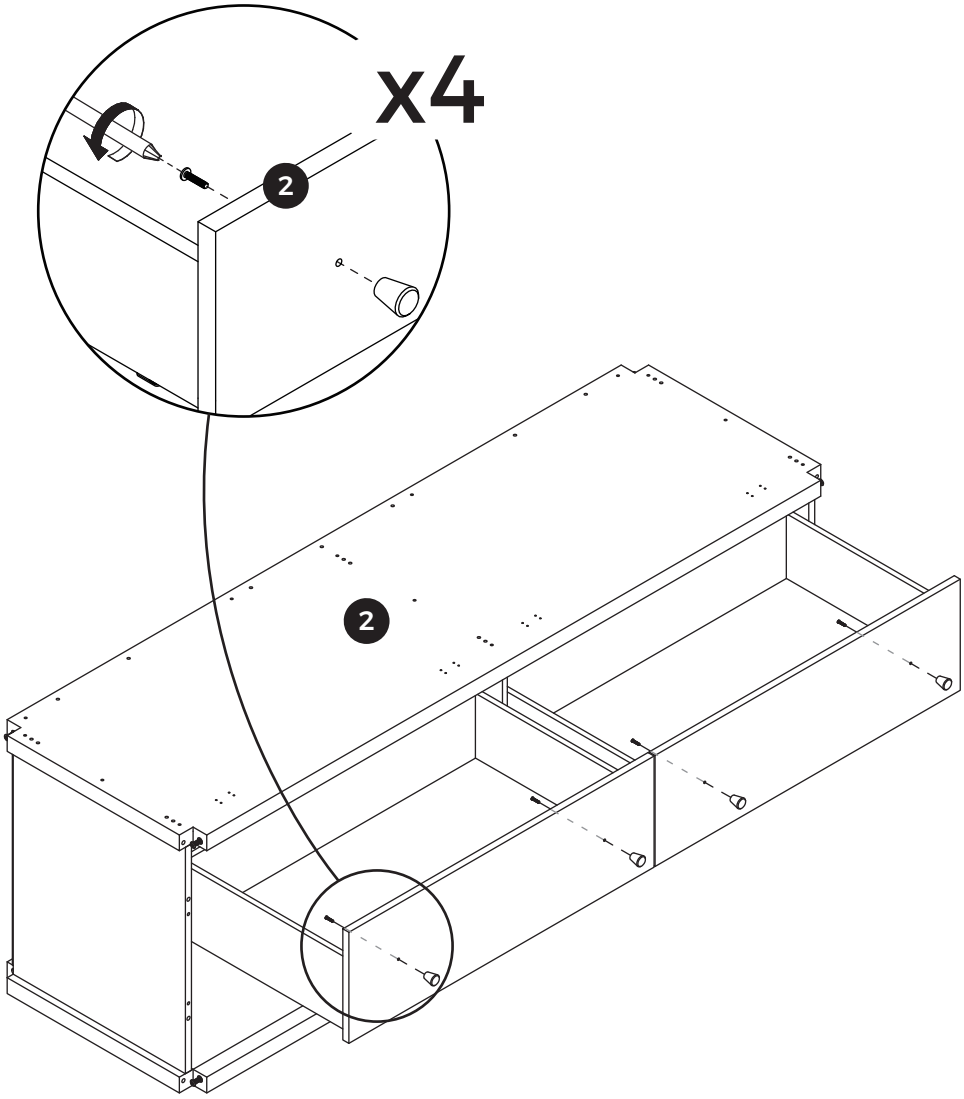

# 09

Push aside the clips of the slide rail.

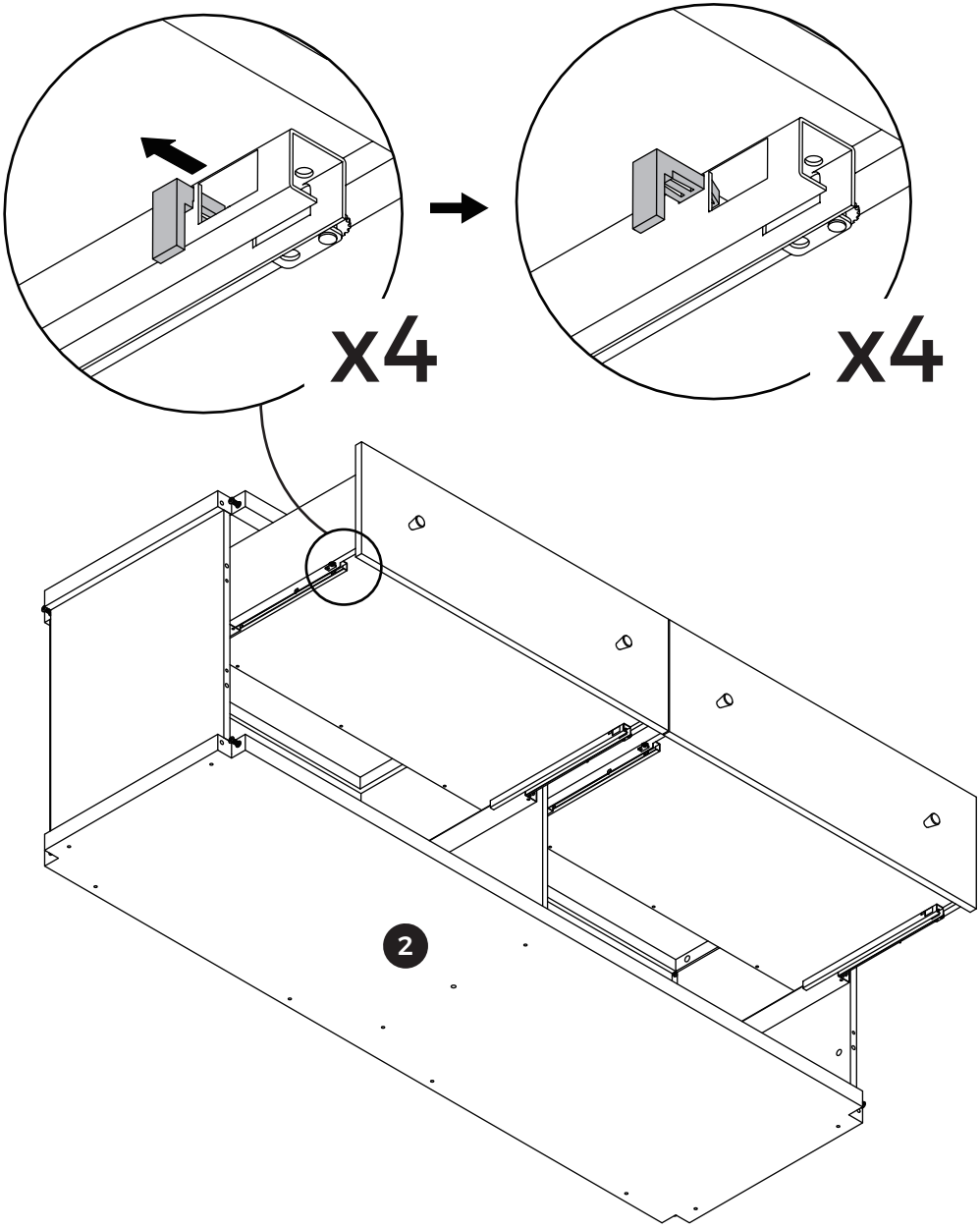

# 10

Take down the drawer.
Flip the cabinet body over.

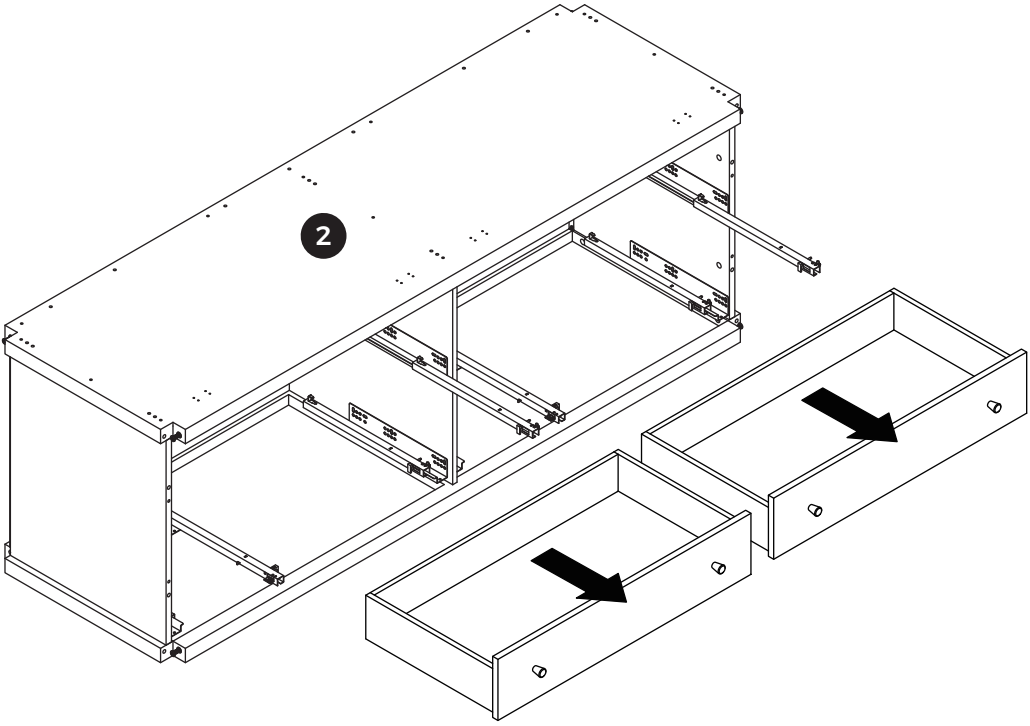


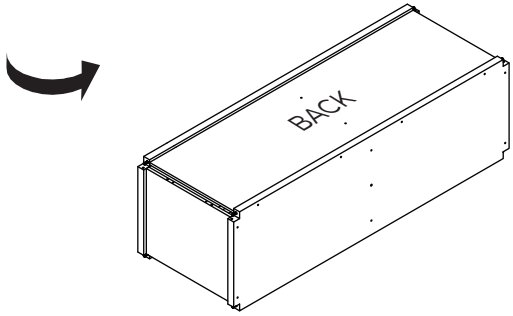

# 11

Install Leg 3 and Leg 5 onto Cabinet Body 2 using Wooden Dowel (C).
Flip the cabinet body over.

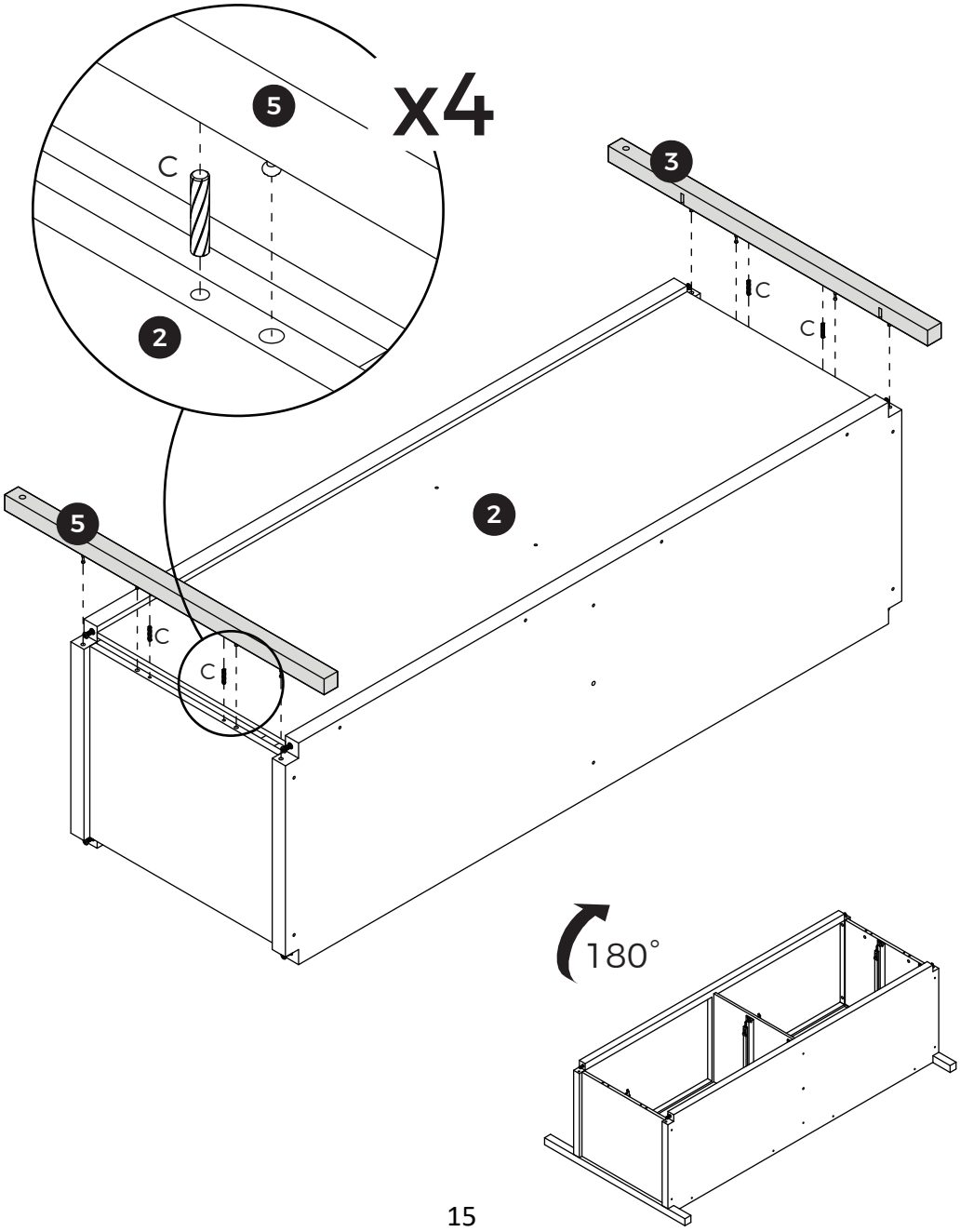

# 12

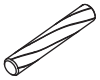

C x 4

Install wooden dowels(C) onto Cabinet Body 2, and screw Leg 7 into Cabinet Body 2.

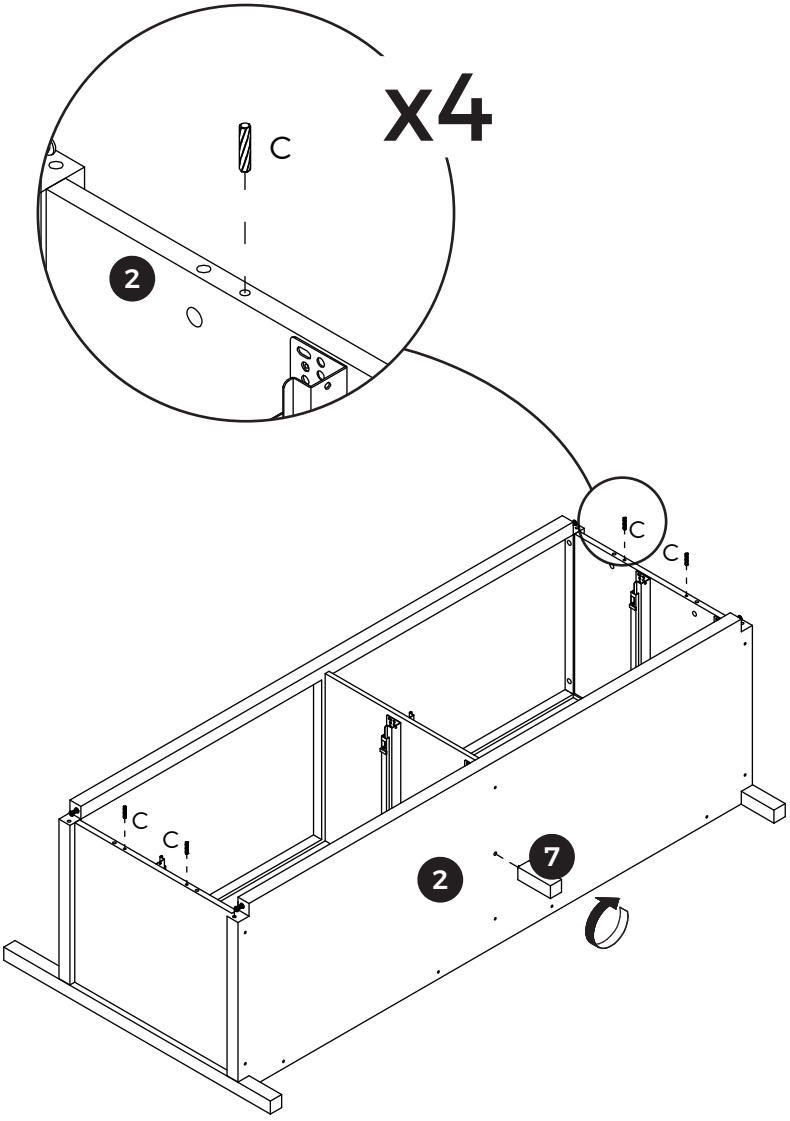

# 13

A x 16 D x 1

Install Leg 4 and Leg 6 onto Cabinet Body 2: then insert Eccentric Cam (A) and tighten it by turning clockwise.

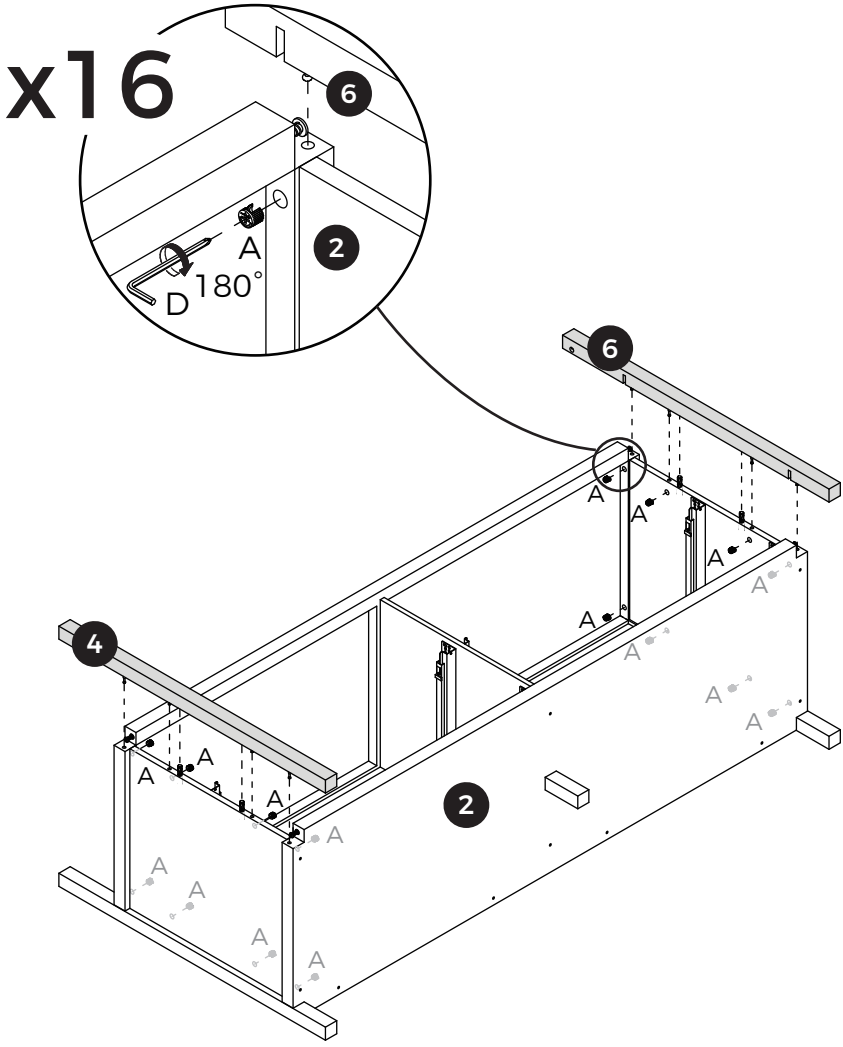

# 14

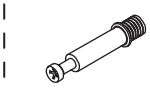

B x 13

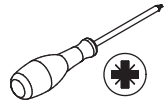

Screw the Self-tapping Rod (B) into Cabinet Body 2.

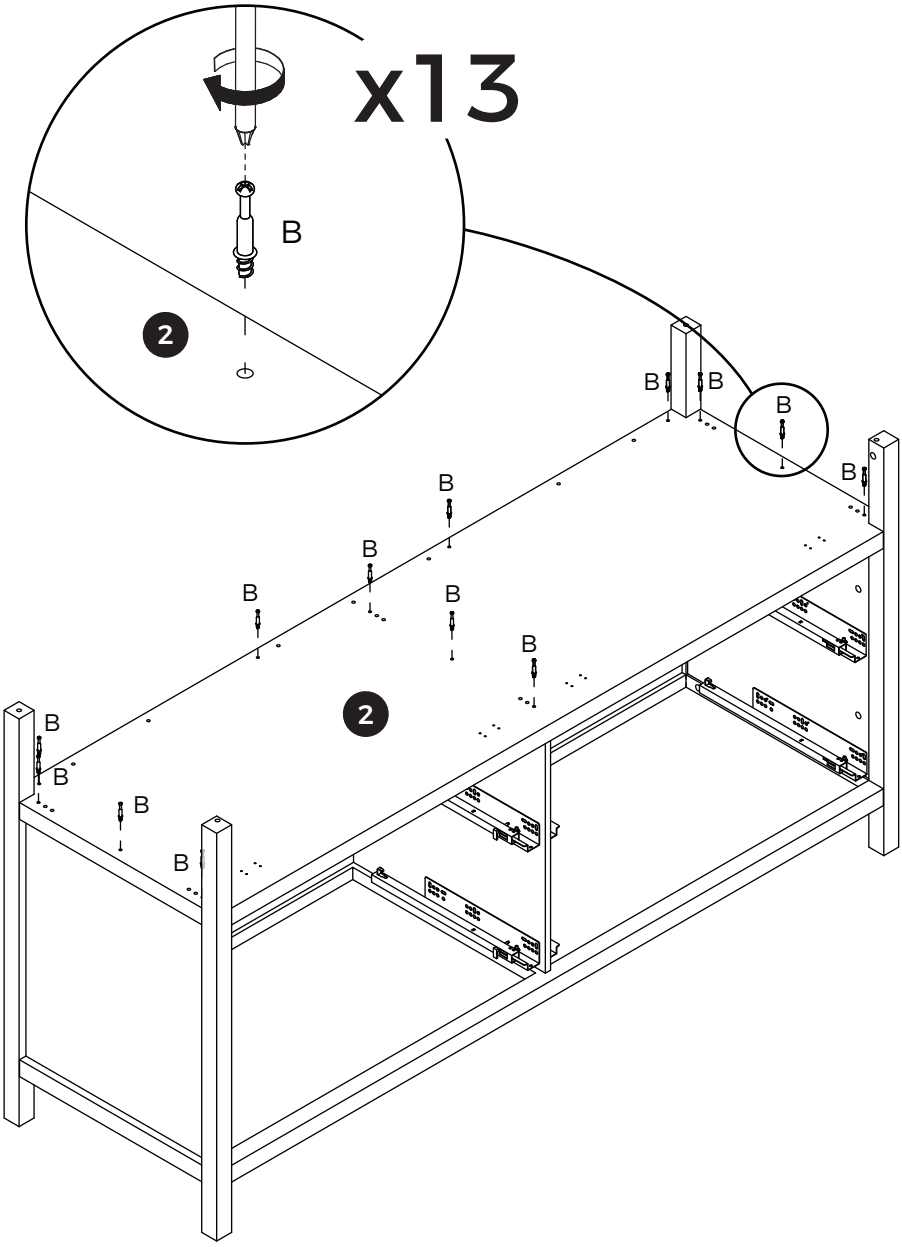

# 15

Install wooden dowels(C) onto Cabinet Body 2.

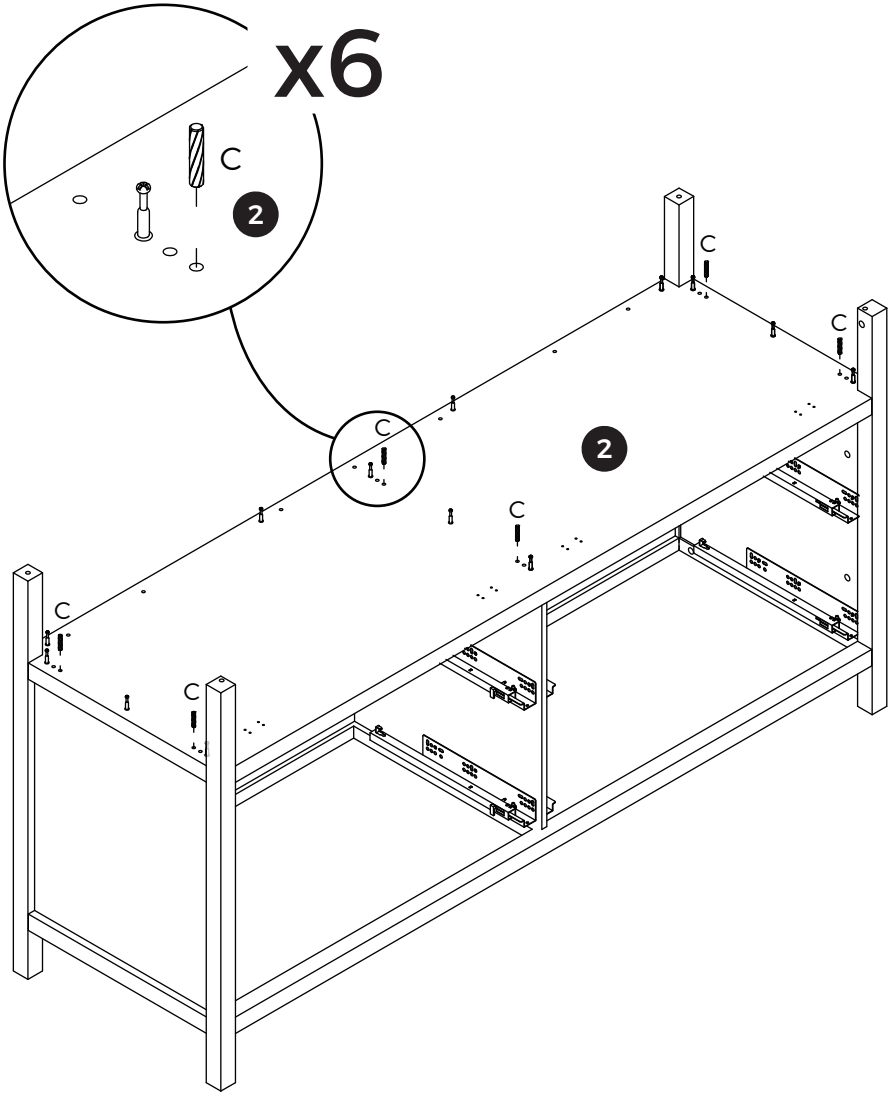

# 16

A x 9

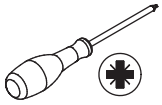

Connect Panel 8 and Panel 9 to Cabinet 2, then install the eccentric wheels (A) and rotate them clockwise to tighten.

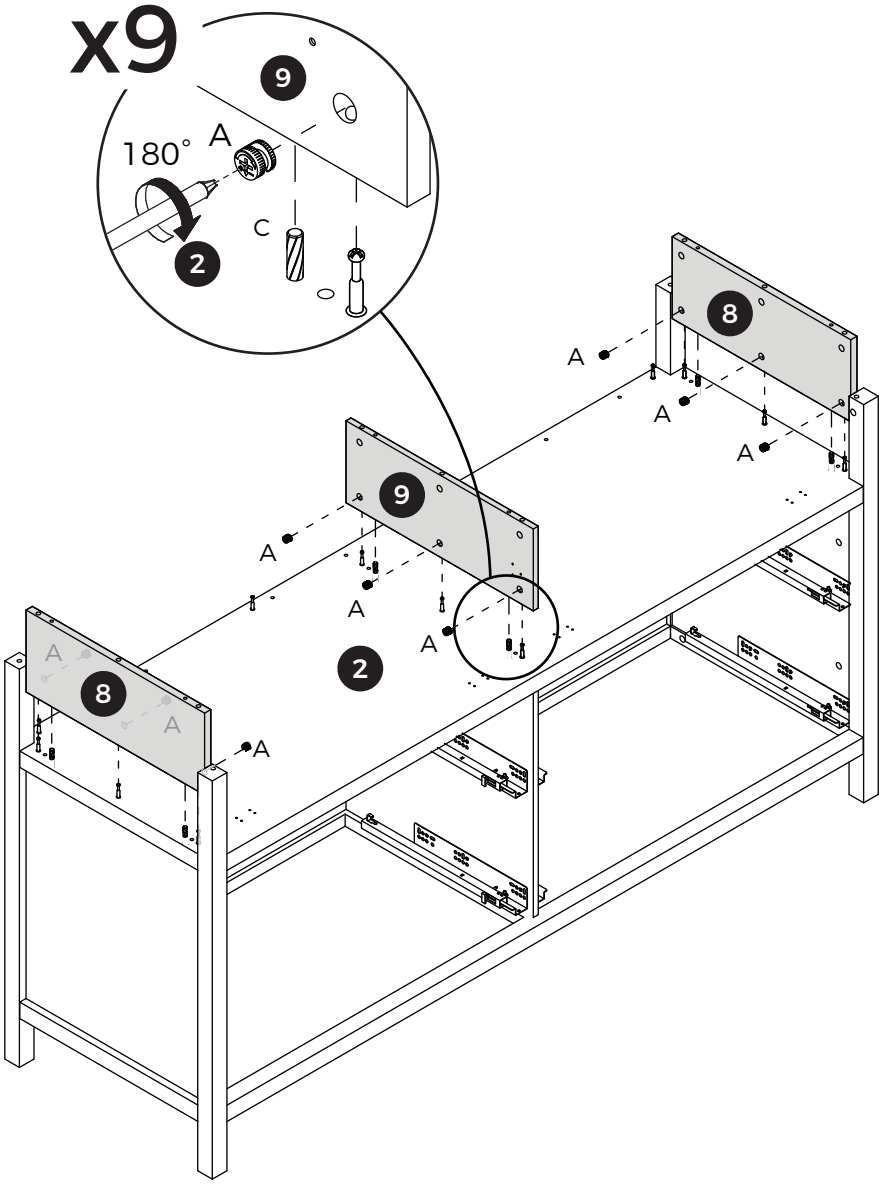

# 17

Install Panel 11 onto Cabinet Body 2 using Wooden Dowel (C); then insert Eccentric Cam (A) and tighten it by turning clockwise.

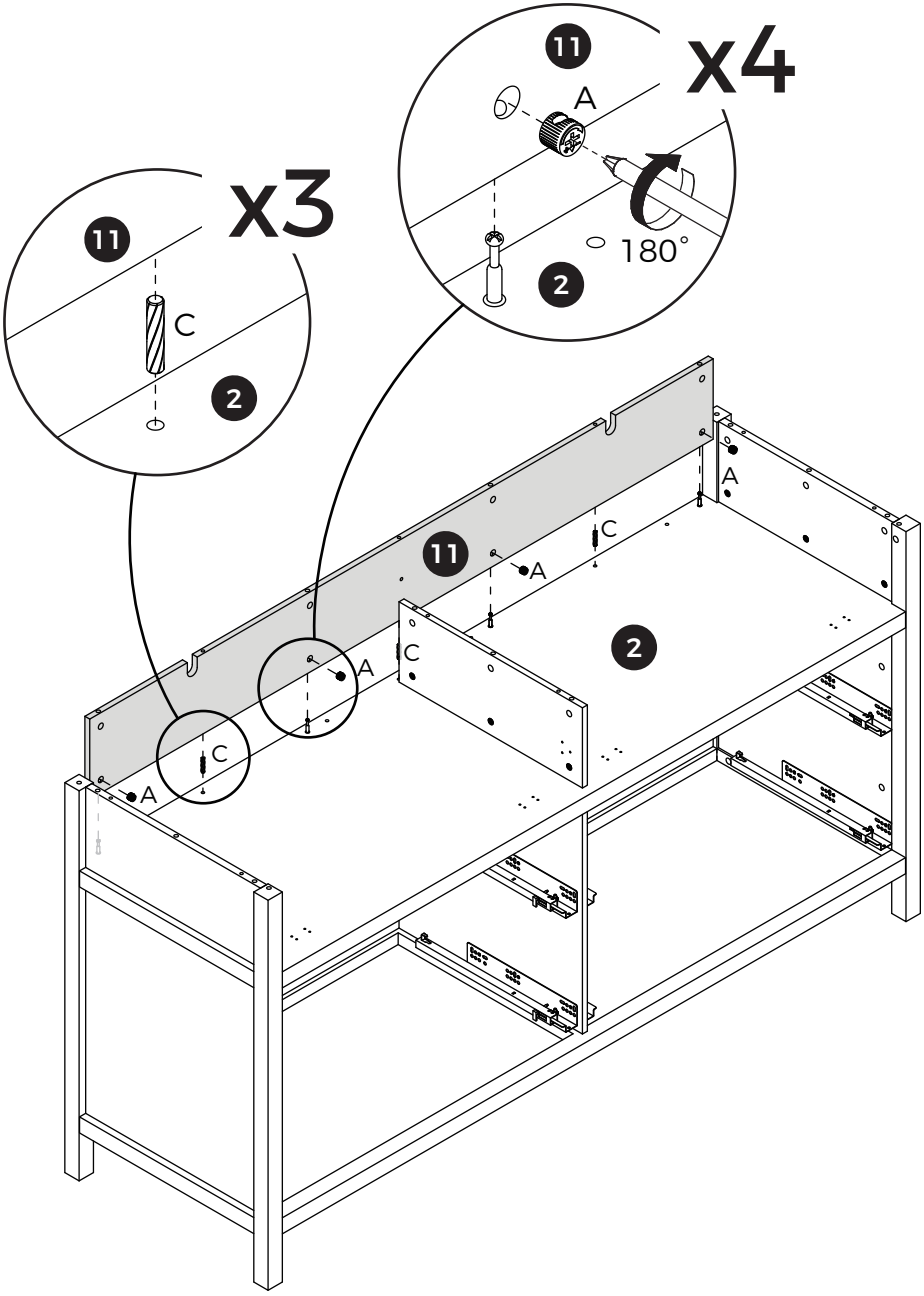

# 18

Insert the wooden tenons (C) into Panel 8, Panel 9, and Panel 11.
Connect Panel 11 to Panel 9 using screws (K).

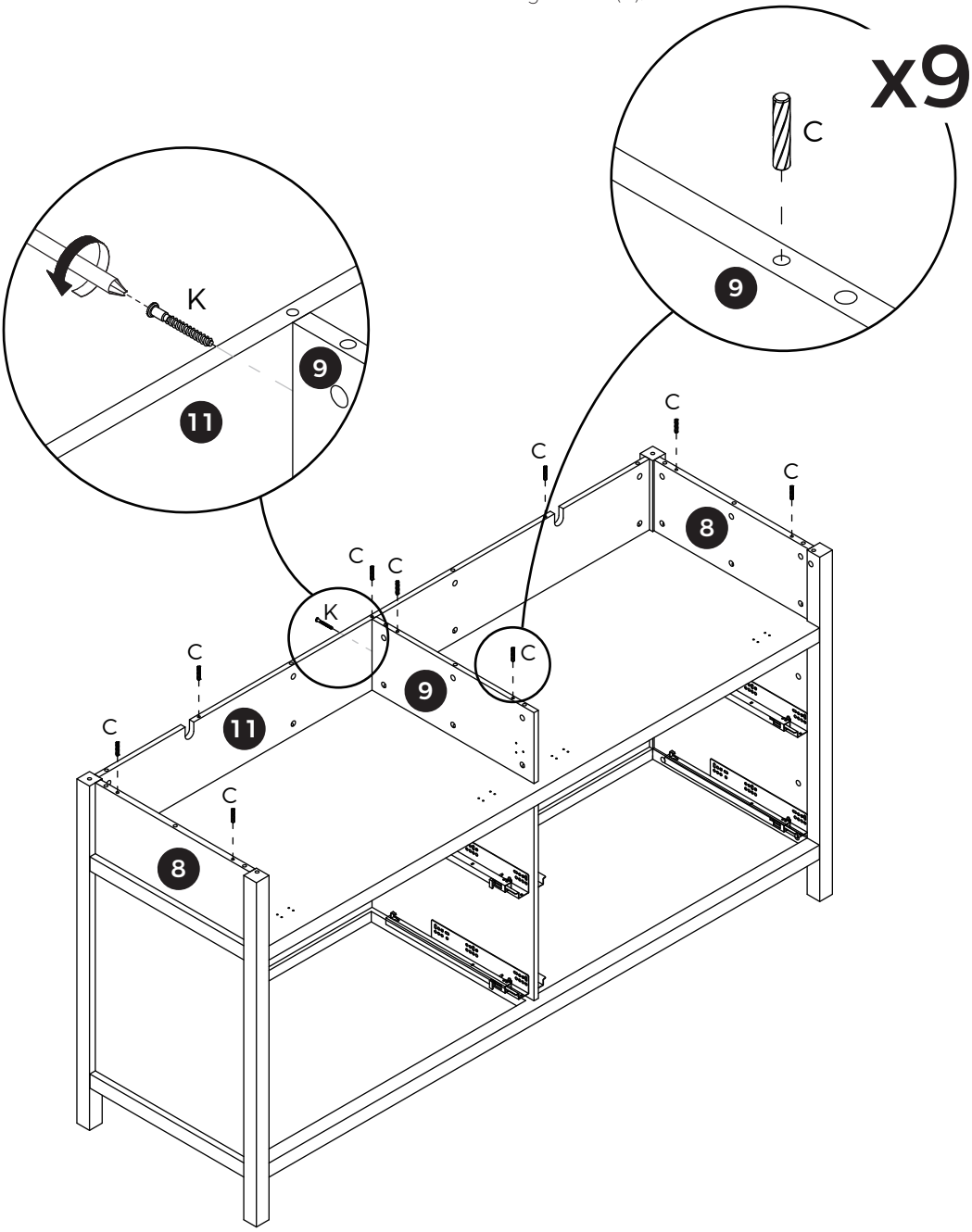

# 19

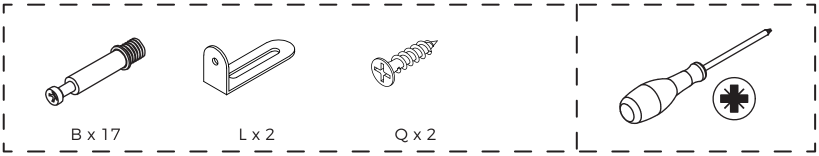


Screw the Self-tapping Rod (B) into Panel 1, and fix Component (L) to Panel 1 using Screw (Q).

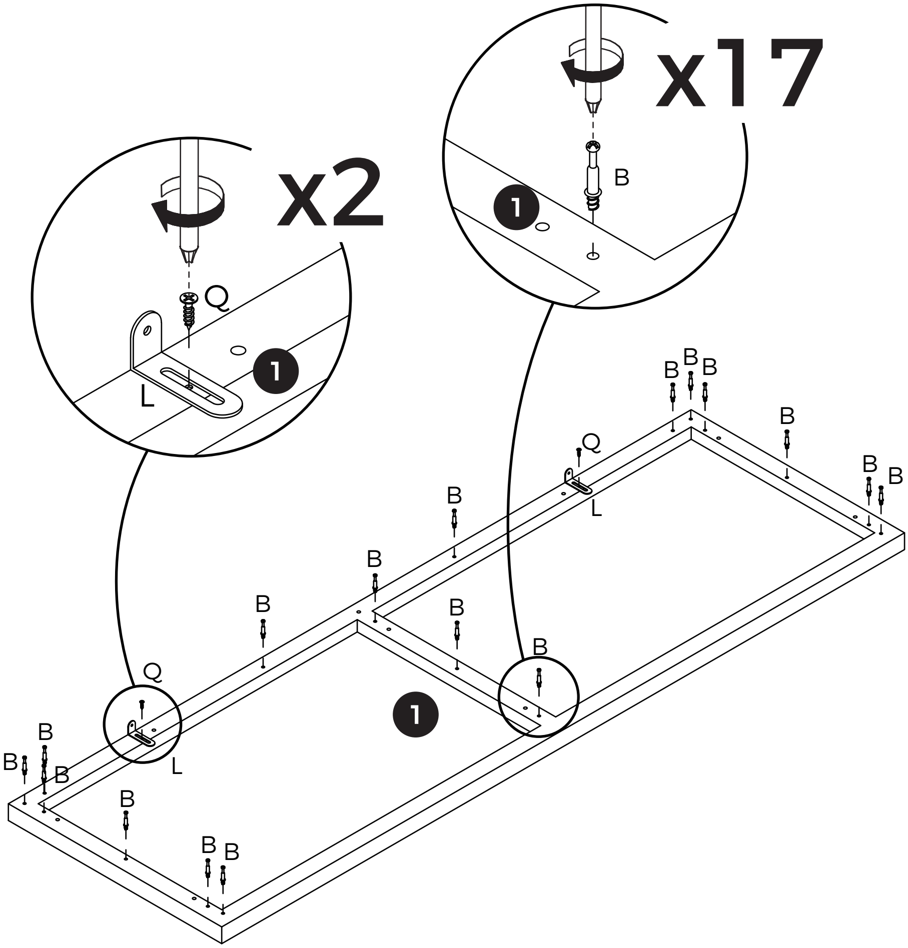

# 20

Connect Panel 1 to the cabinet, then insert the eccentric cams (A) and tighten them by turning clockwise.

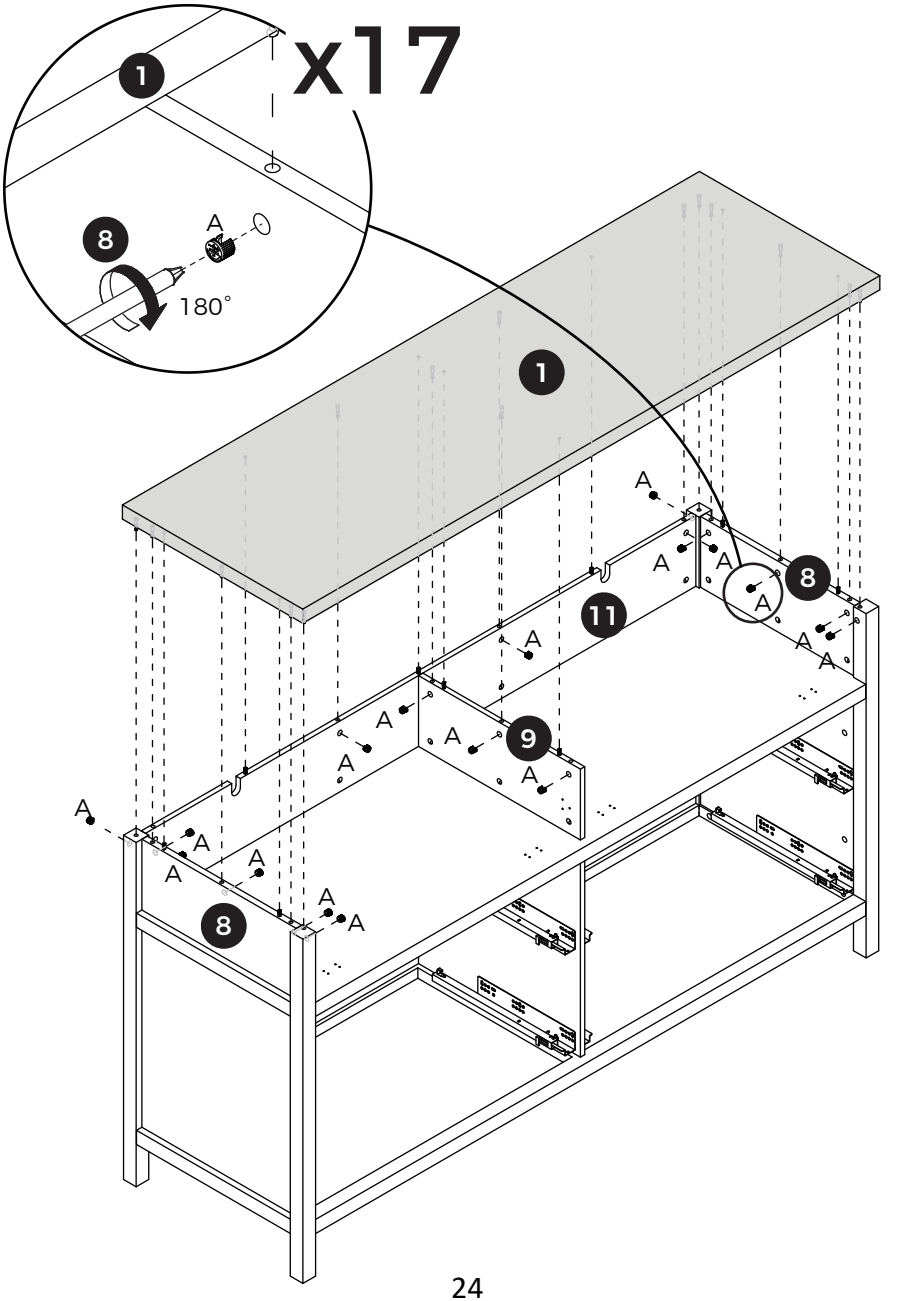

# 21

Install the anti-tip device as shown in the diagram.

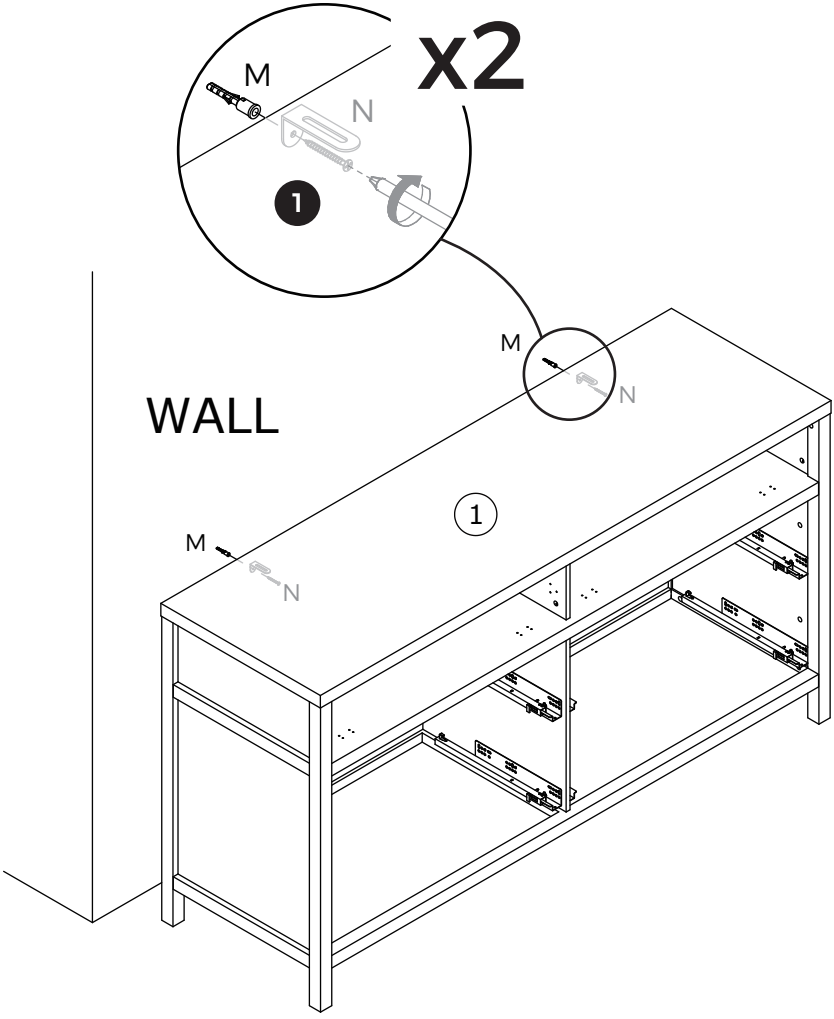


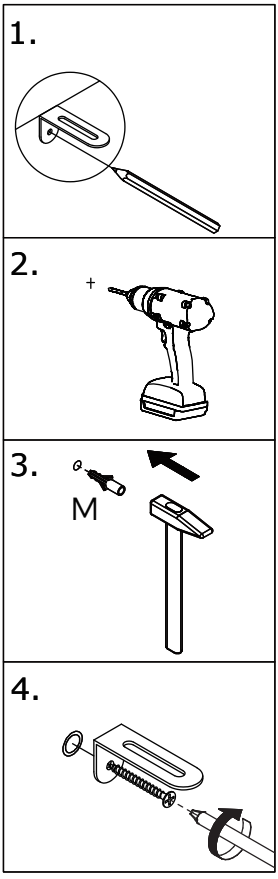

# 22

Fix Component (E) to Panel 12 and Panel 13 using Screw (Q).

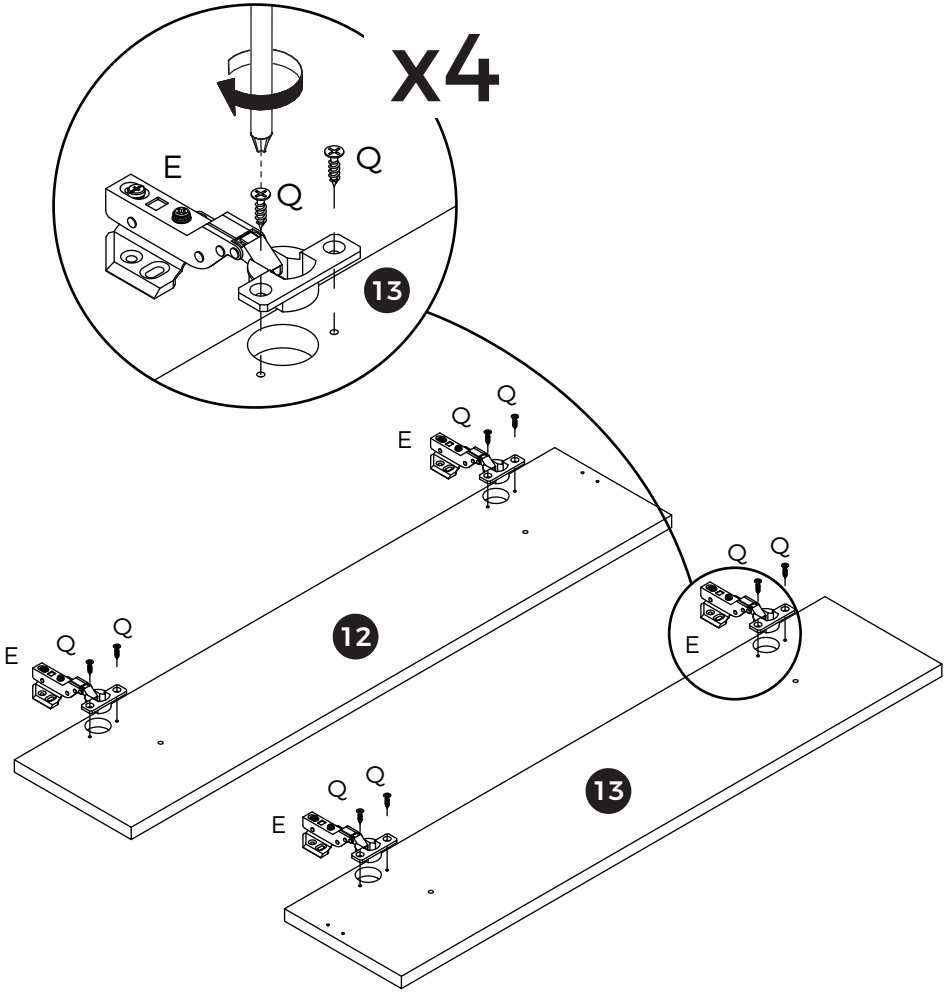

# 23

Connect Panel 12 and Panel 13 to Cabinet Body 2 using Screw (P).

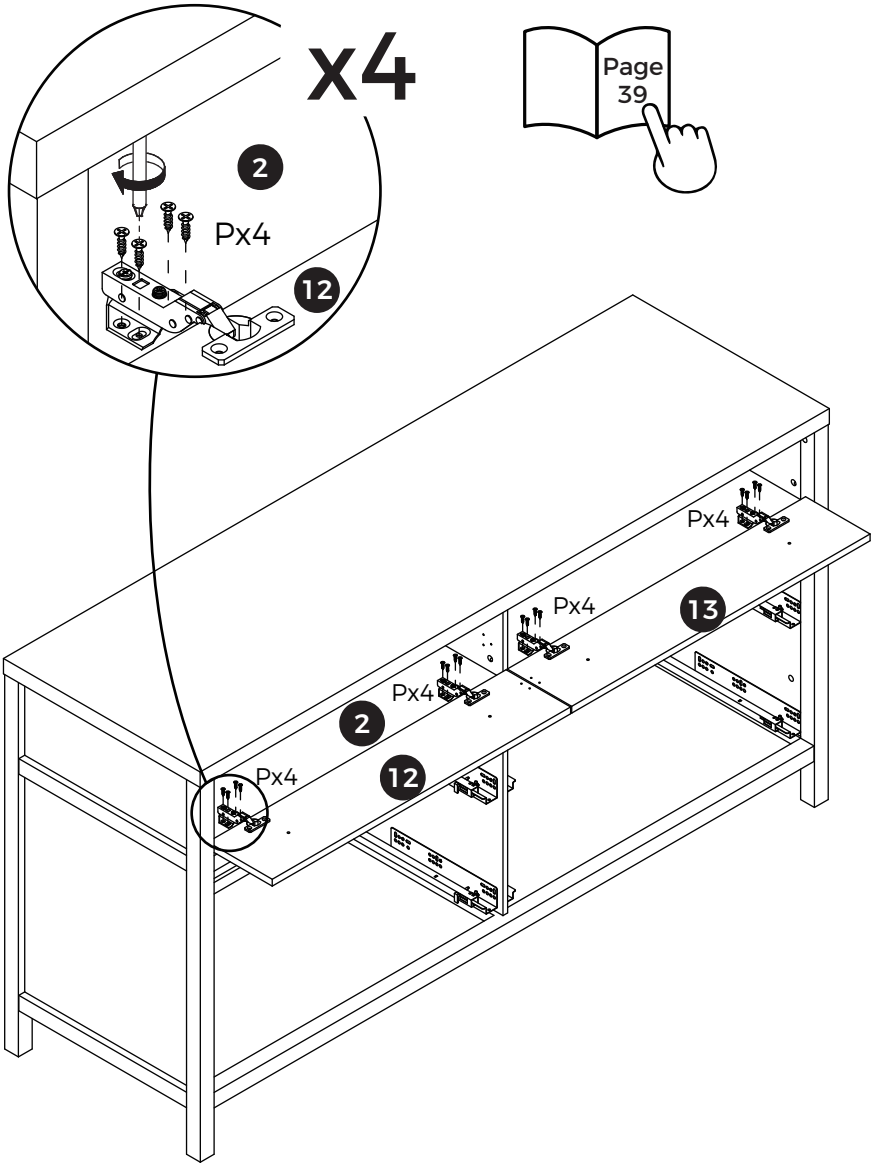

# 24

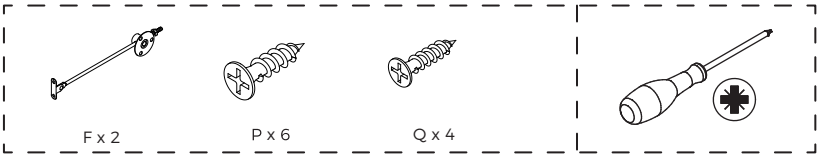


Fix Component (F) to Panel 9 using Screw (P), and fix Component (F) to Panel 12 and Panel 13 using Screw (Q).

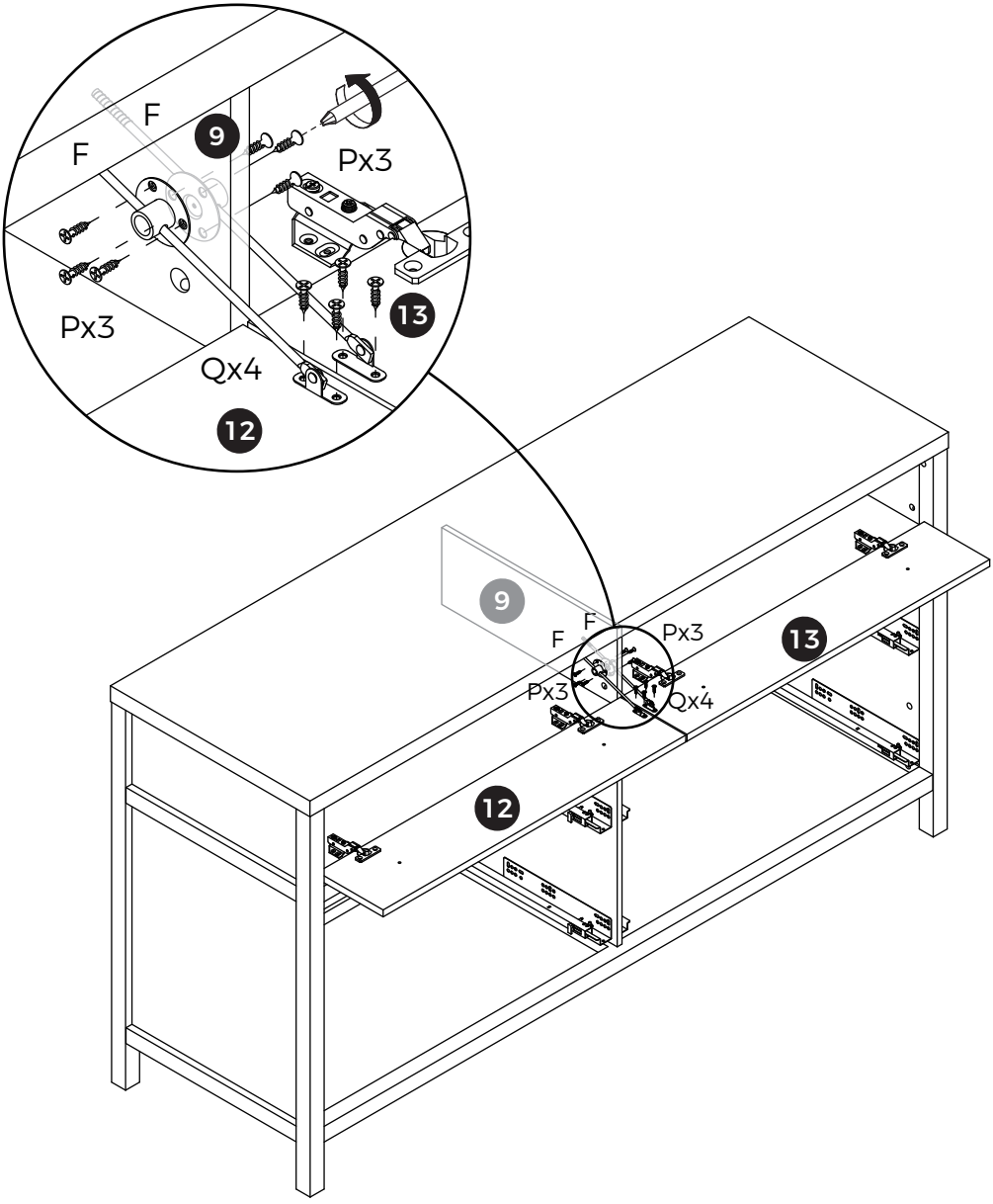

# 25

Fasten component (H) to Panel 12 and Panel 13 using screws (J).

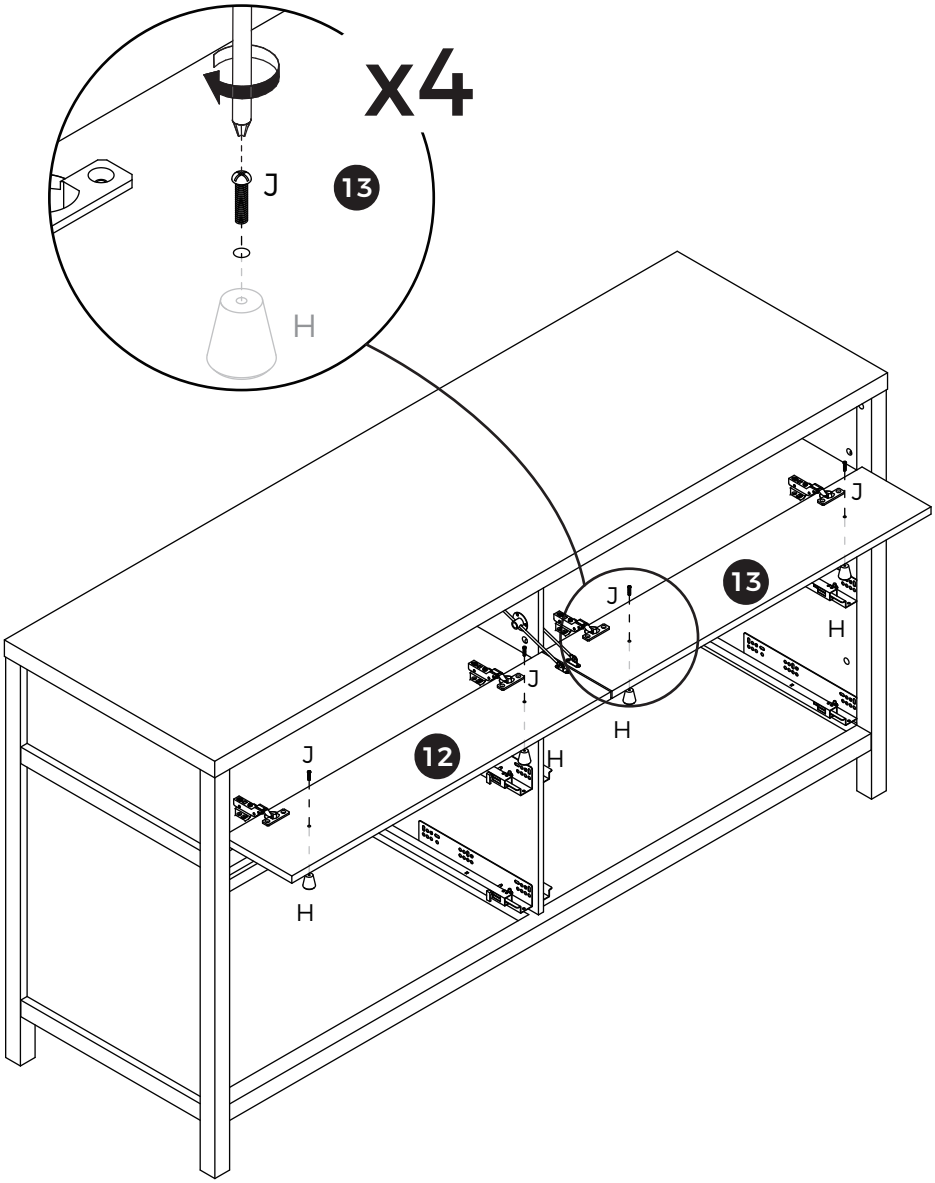

# 26

Pull out the bottom slide rail.

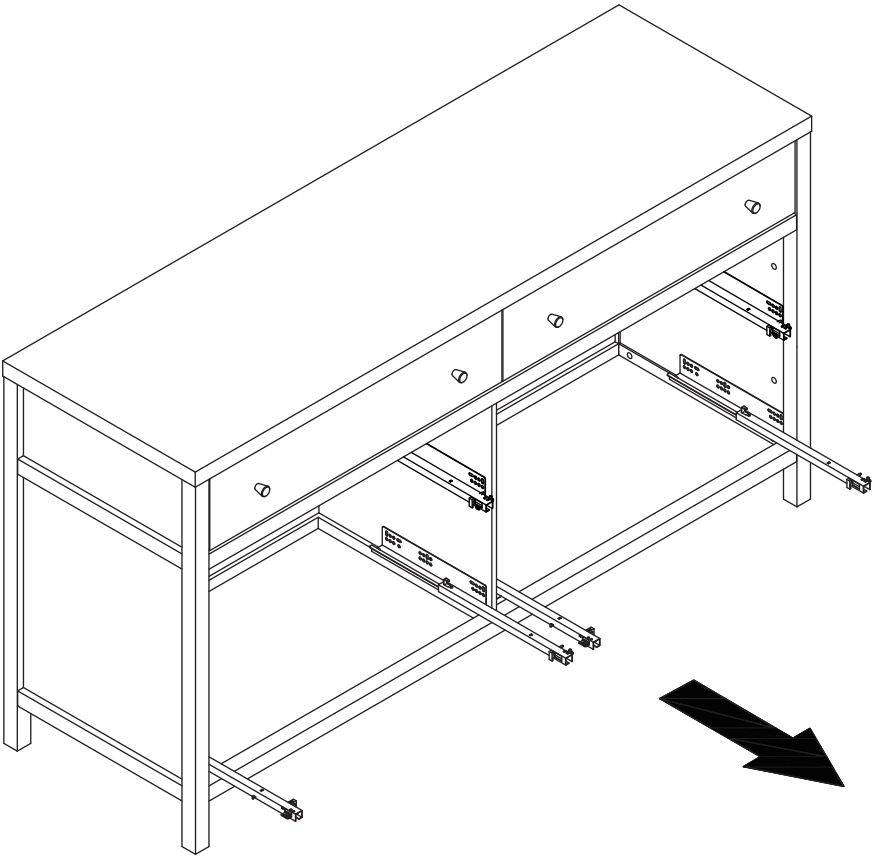

# 27

Install the drawer by fitting the protrusions at the end of the slide rails into the holes at the end of the drawer.

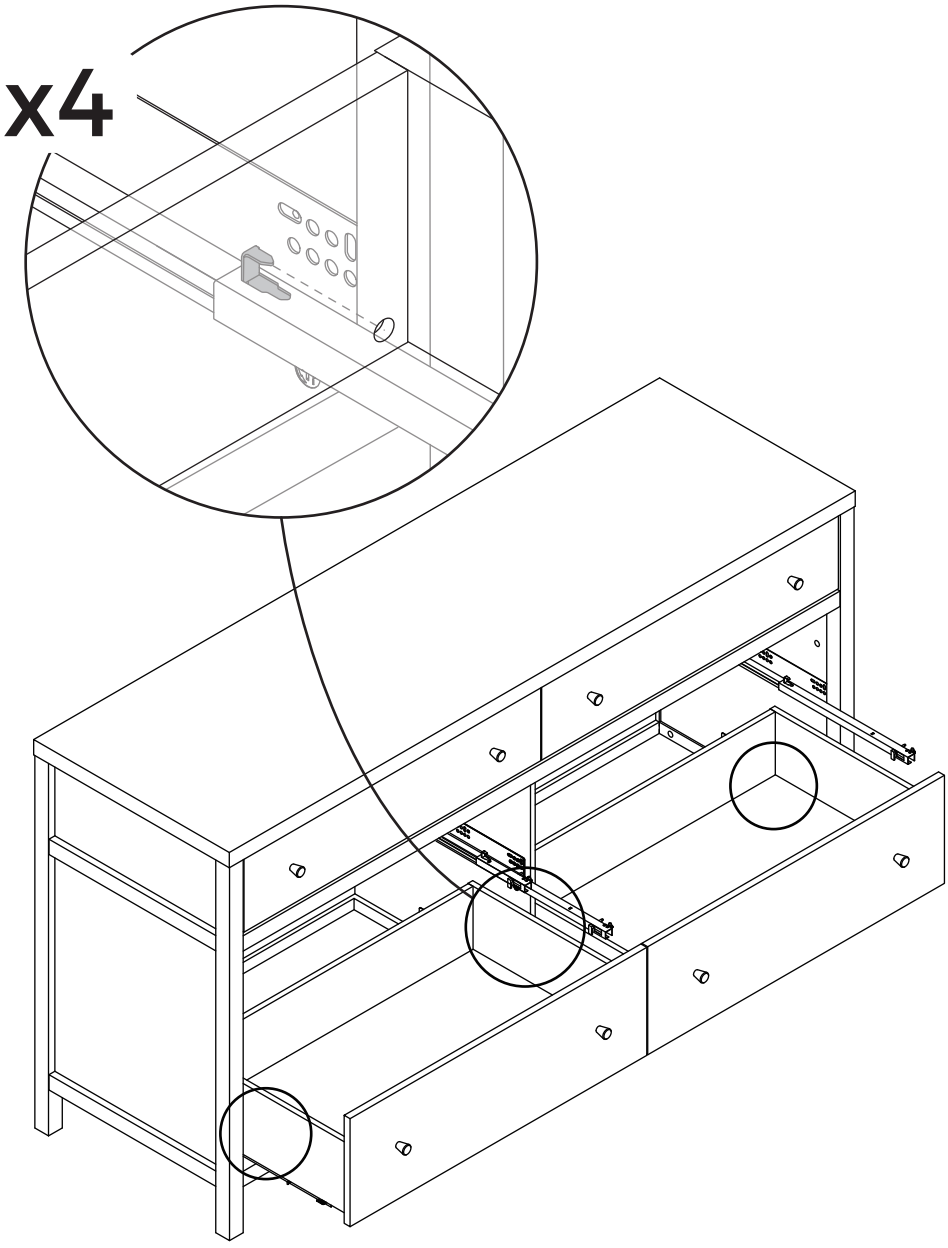

# 28

Align with the holes, then lock the slide rail clips in place.

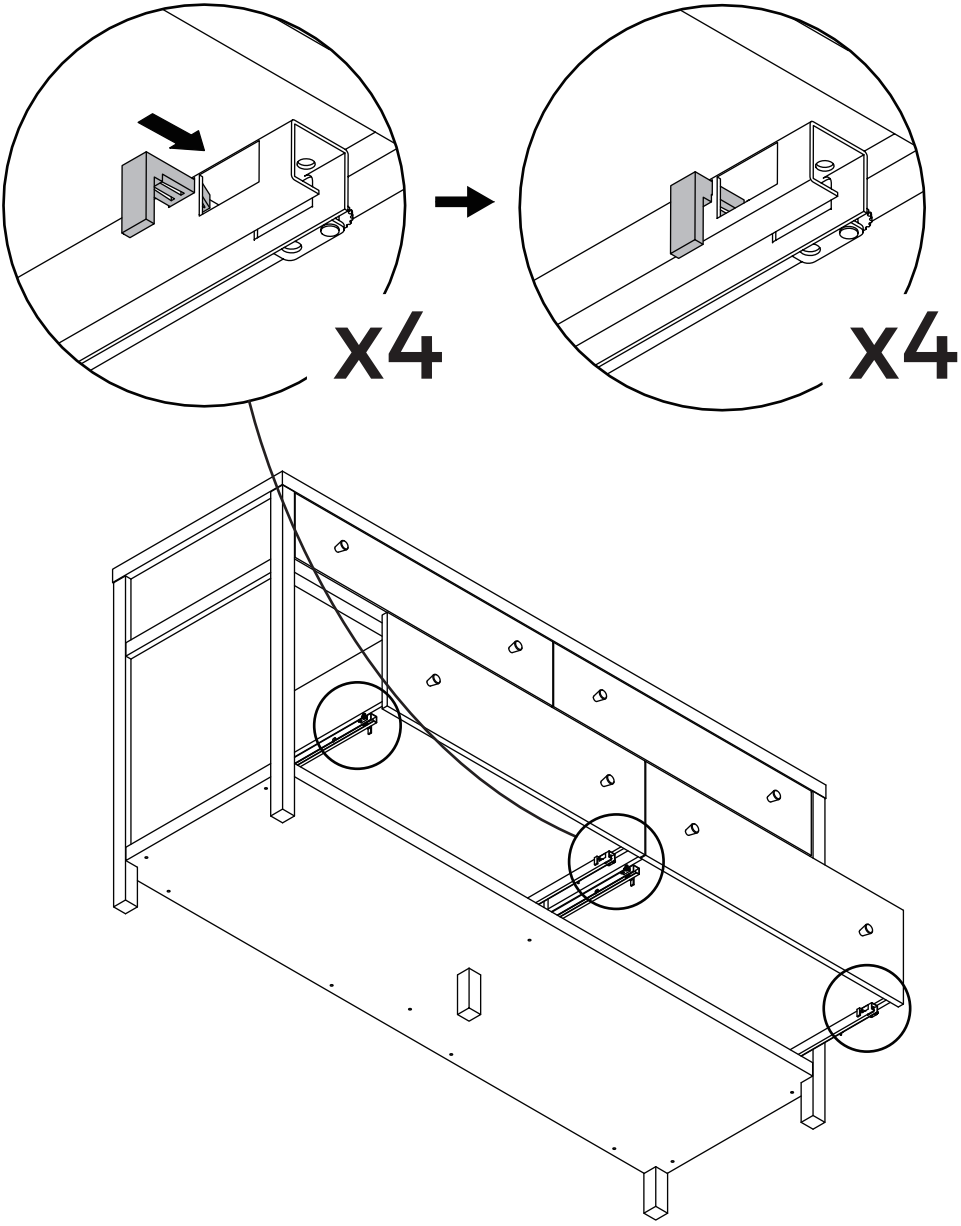

# 29

Pull out the top slide rail.

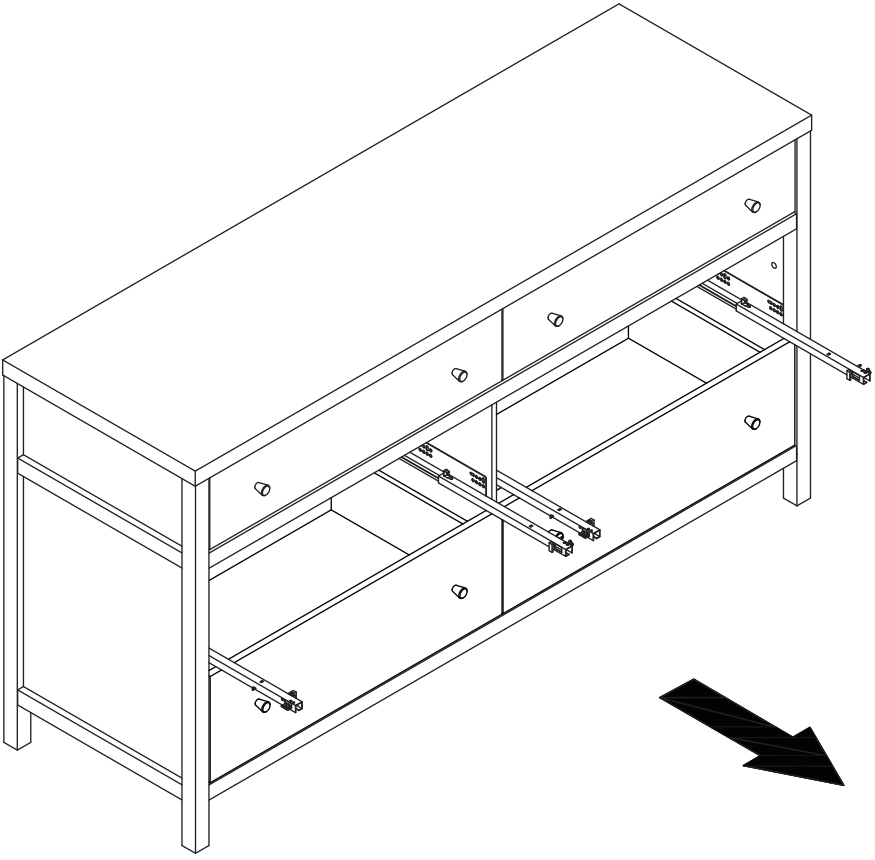

# 30

Install the drawer by fitting the protrusions at the end of the slide rails into the holes at the end of the drawer.

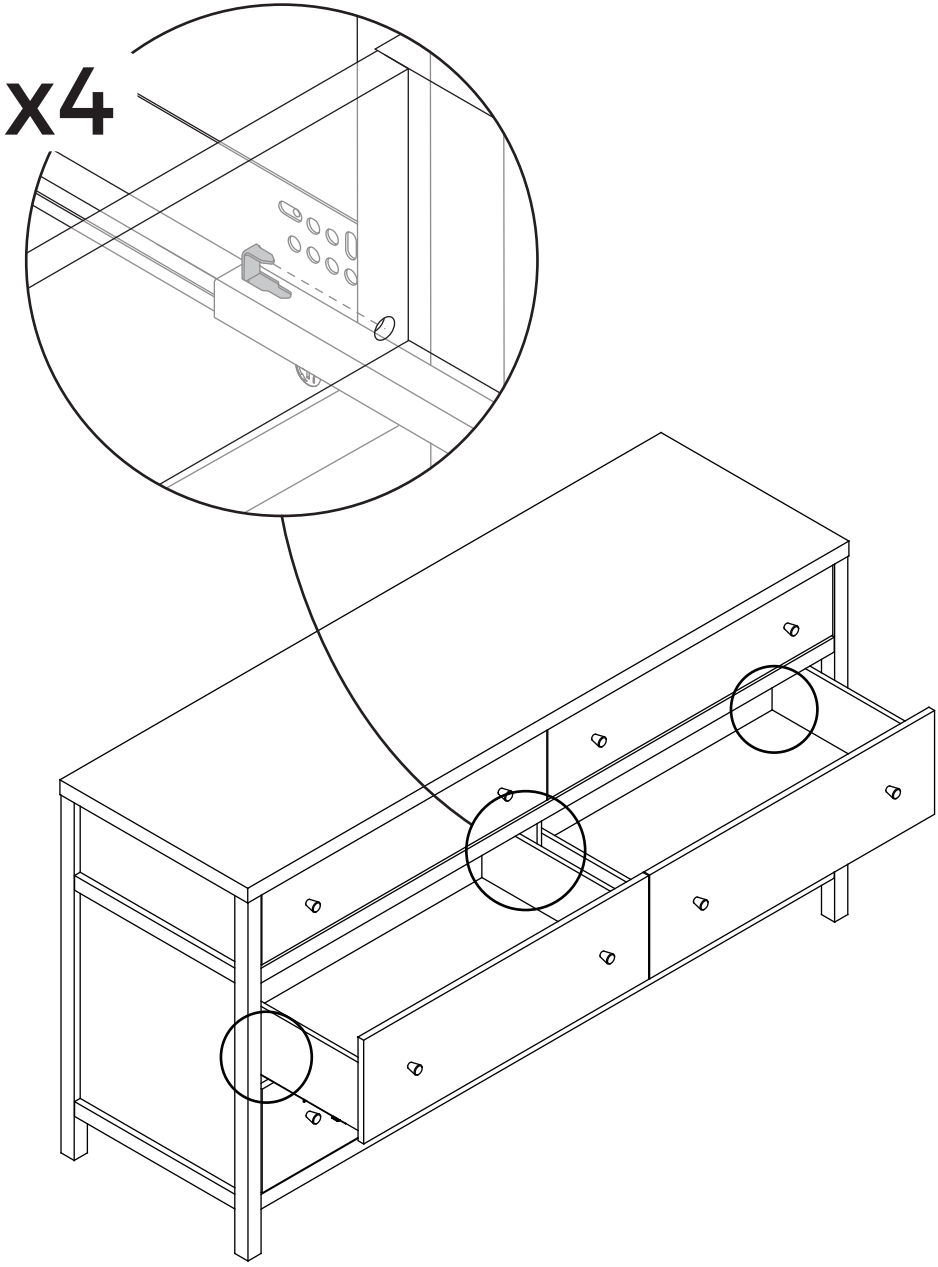

# 31

Align with the holes, then lock the slide rail clips in place.

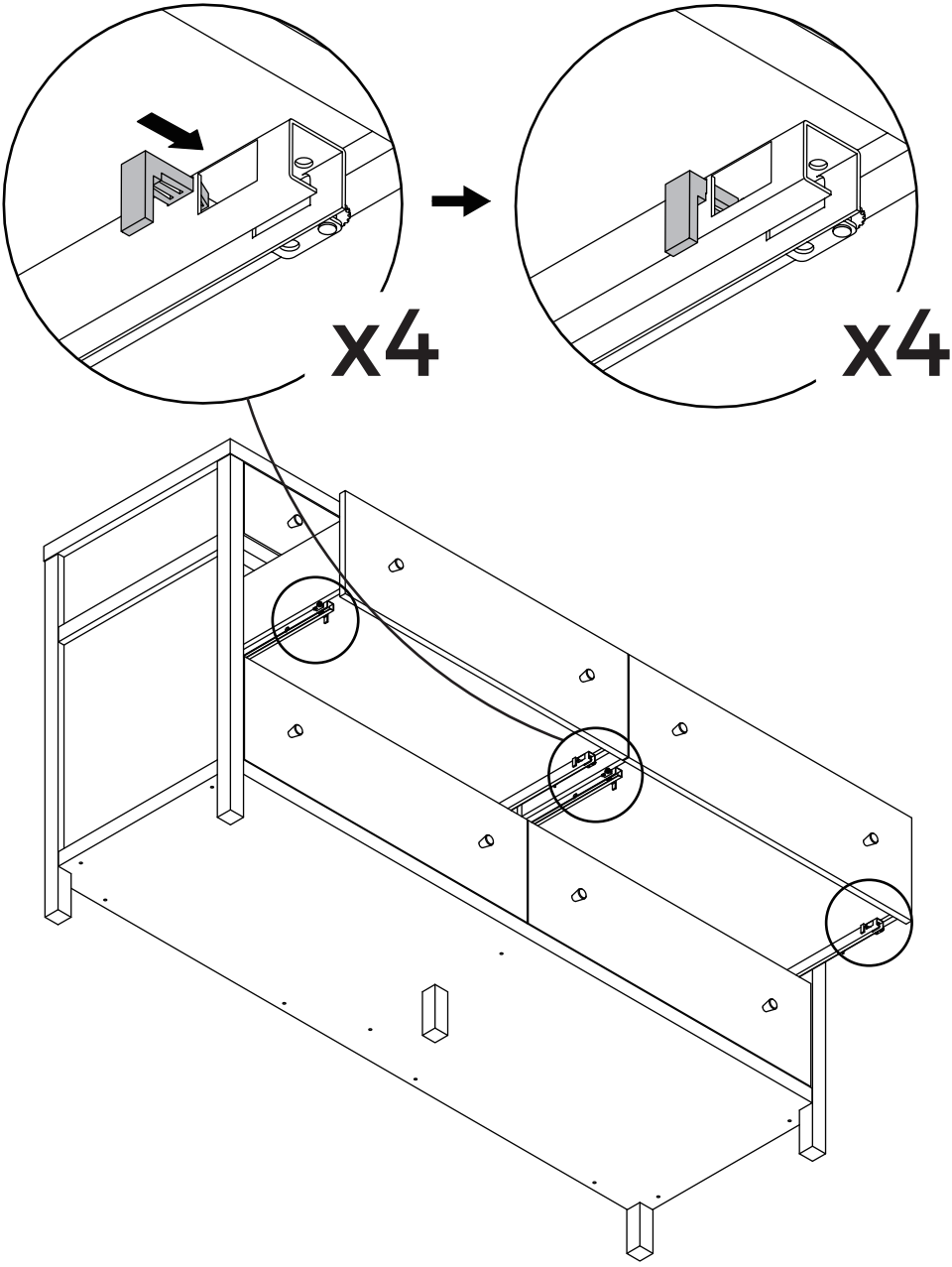

# 32

If the gap of the drawer is uneven, you can try adjusting the knobs under the slide rails on both sides.

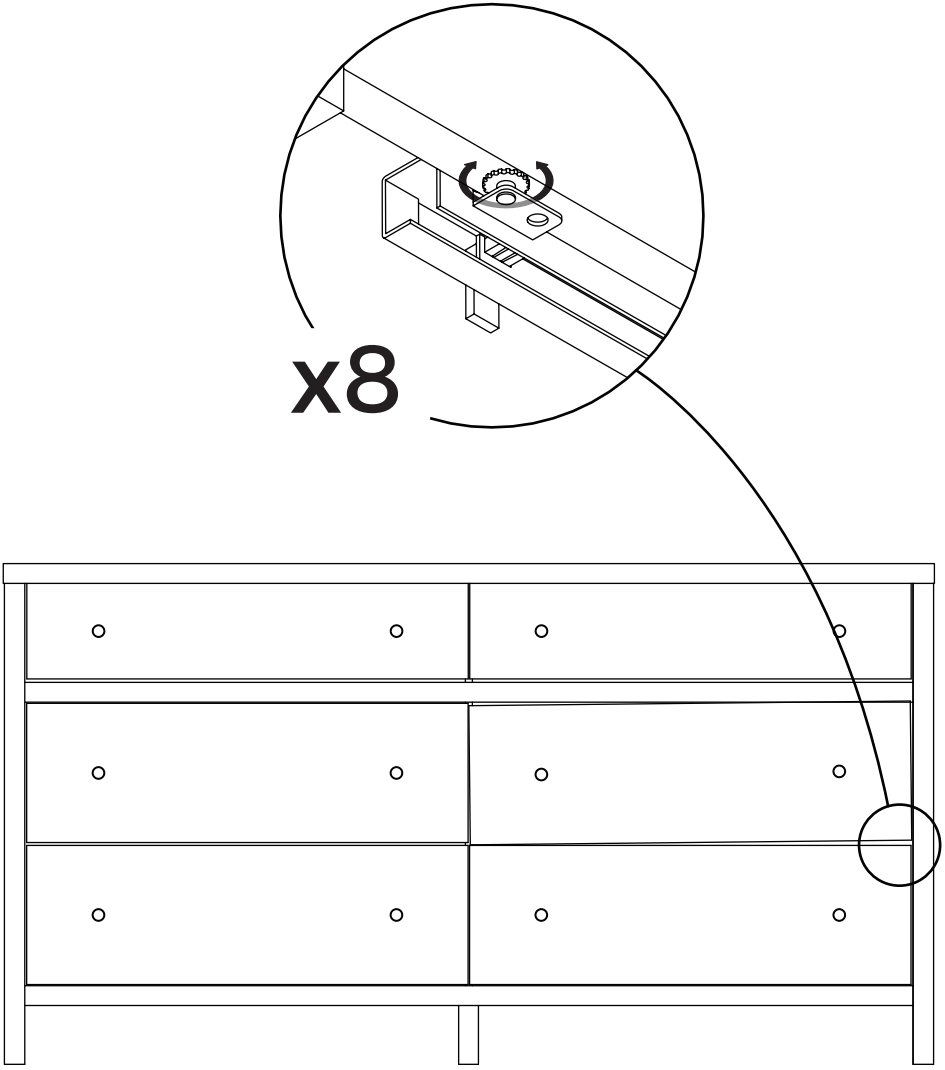
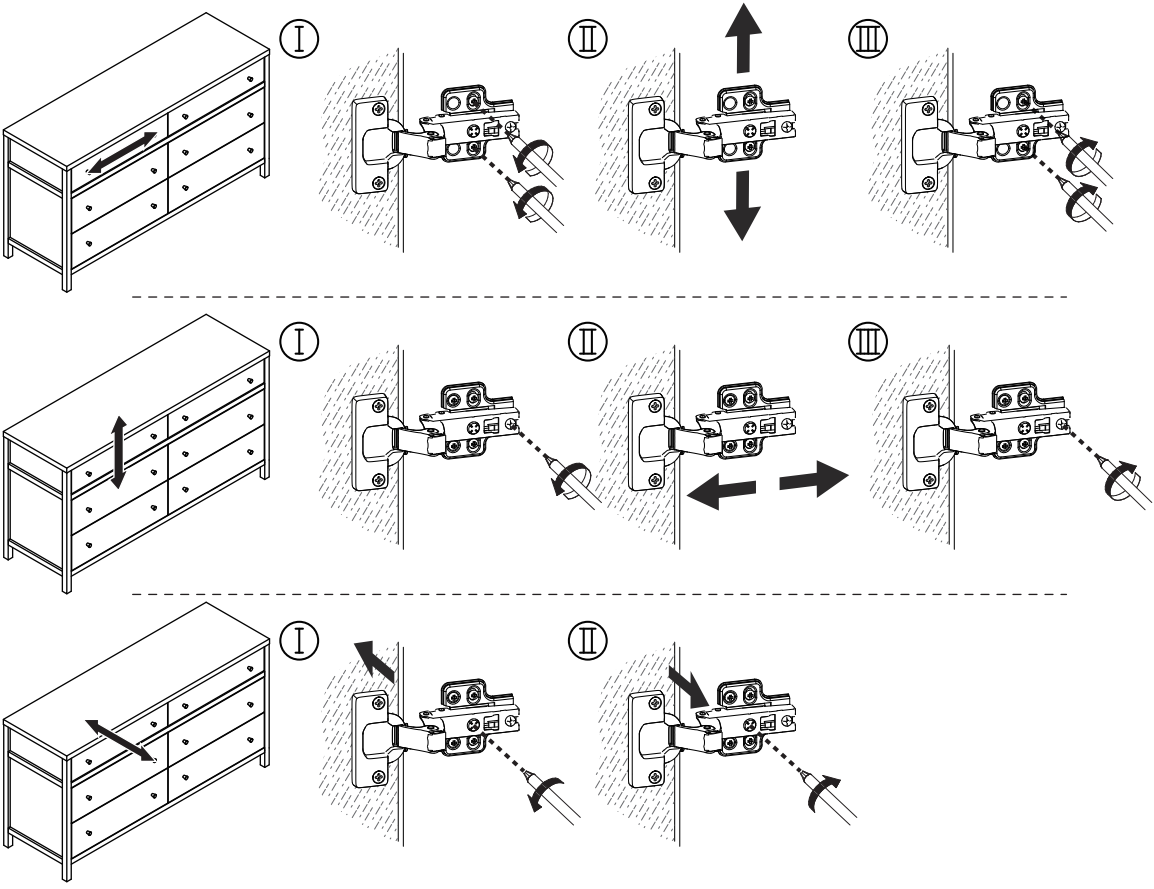
# 33