Bathroom Vanity Tops

Backsplash Included: Backsplash Included

Number of Sinks : Single Sink

Faucet Holes Spacing(in.): 8 in.

Color Family : White

Sink Type: Undermount

Backsplash Included: Yes

Undermount Sink Included: Yes

Faucet Included: No.

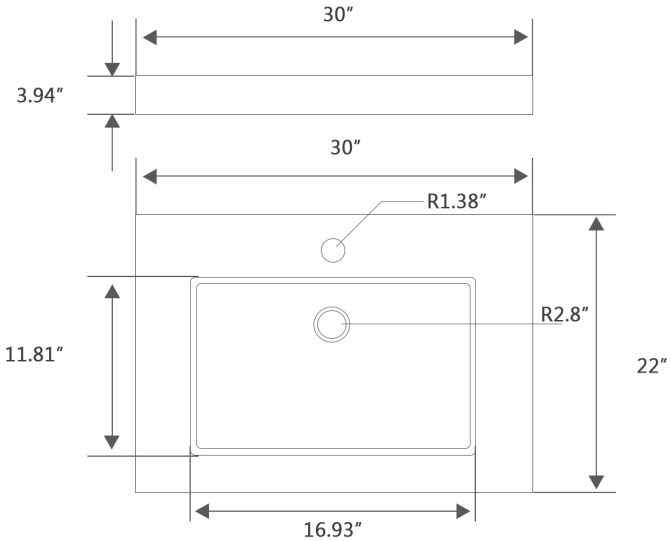

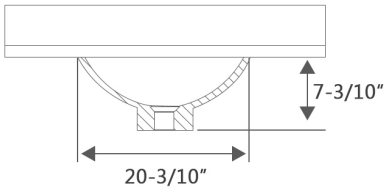

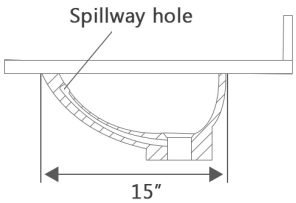

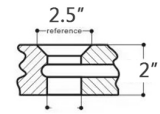

Lavatory and Bidel Outlet Detail