Outdoor Double Chaise Lounger

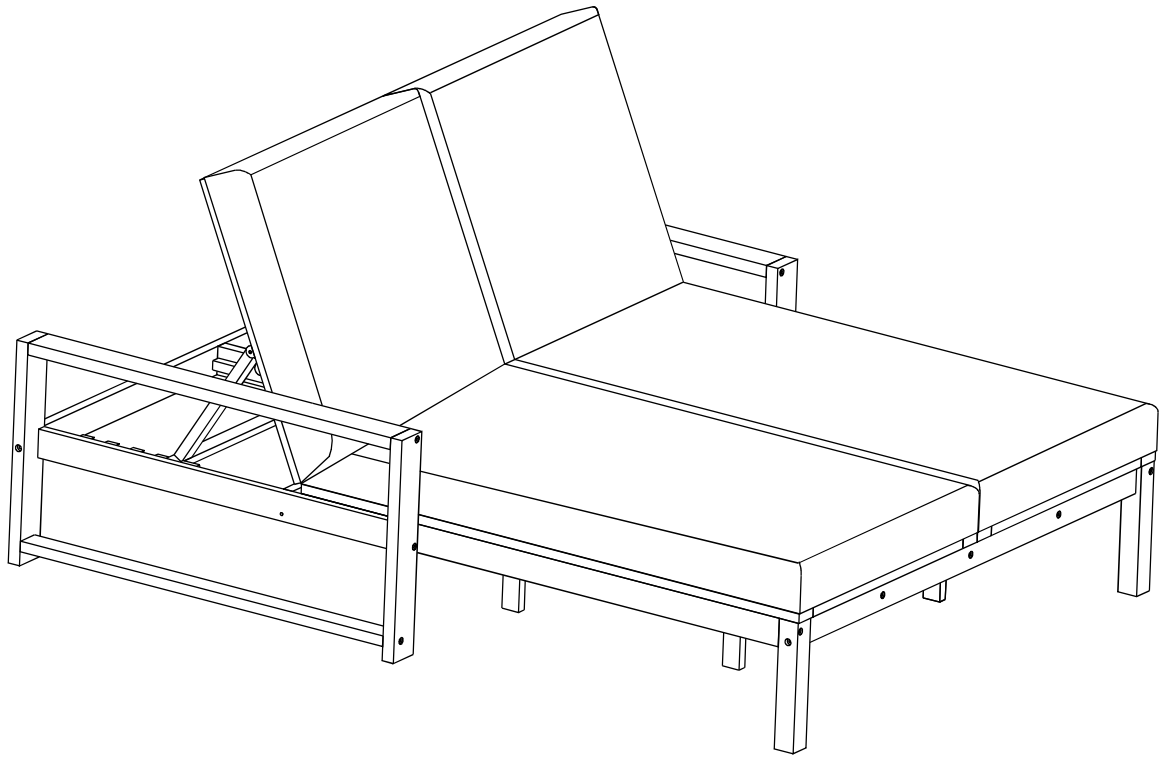

Please read all instructions carefully:

1. **Have 2 adults on hand for assembly.**
2. **50% Tighten before fixing all screws, Allen wrench is recommended instead of an electric drill.**
3. **Place the item on a flat ground to adjust and make sure it remains stable.**
4. **Tighten up all screws with tools gradually.**
5. **If the screws are not aligned with holes during assembly, please loosen all the other screws to 50% and continue the assembly process.**
6. **If the item is not stable, please loosen all the screws, adjust it on a flat ground and tighten up all screws again.**
7. **Note : If one or some screws are fully tightened during assembly, chances are the others will not be aligned with holes. In addition, all the holes are designed to be relatively larger to provide more space for the adjustment of the screws.**

Assembly Instructions

Caution: You must read this before you proceed

SAFETY WARNING

Never adjust the chaise lounge or the recliner backrest while seated.

Always make sure the backrest is flat before moving the chaise lounge.

Keep all limbs clear from under the backrest when it is in a raised position.

Serious finger, hand, or other bodily injuries may result from adjusting the chaise lounge backrest position while seated.

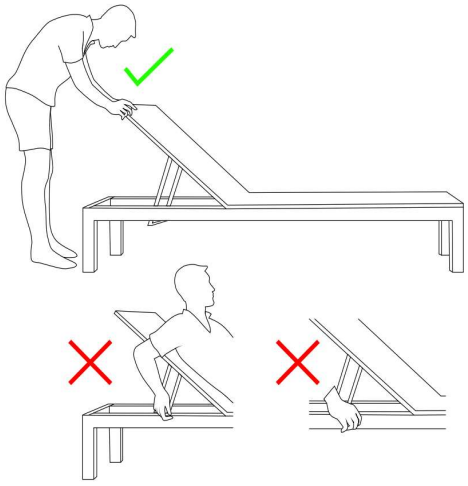

The examples pictured above are non exhaustive and are for your reference only

Care & Maintenance

- Not for commercial use. For residential use only.
- Do not put hot items directly on furniture surface.
- Do not clean furniture with harsh cleansers or polishes.
- To obtain the longest lifespan of your outdoor products, minimizing exposure to direct sunlight is recommended.
- Children should not climb or jump on the furniture.
- Do not write on furniture without a padded barrier to protect the surface.
- To obtain the longest lifespan of your outdoor products, avoid extended and lengthy exposure to rain, snow, and direct sunshine. Whenever possible cover the product and /or place under patio or awnings.
- Stains may be removed with mild soap solution and damp cloth.
- Dust and pick-up spills using a clean, non-colored, lint-free cloth.

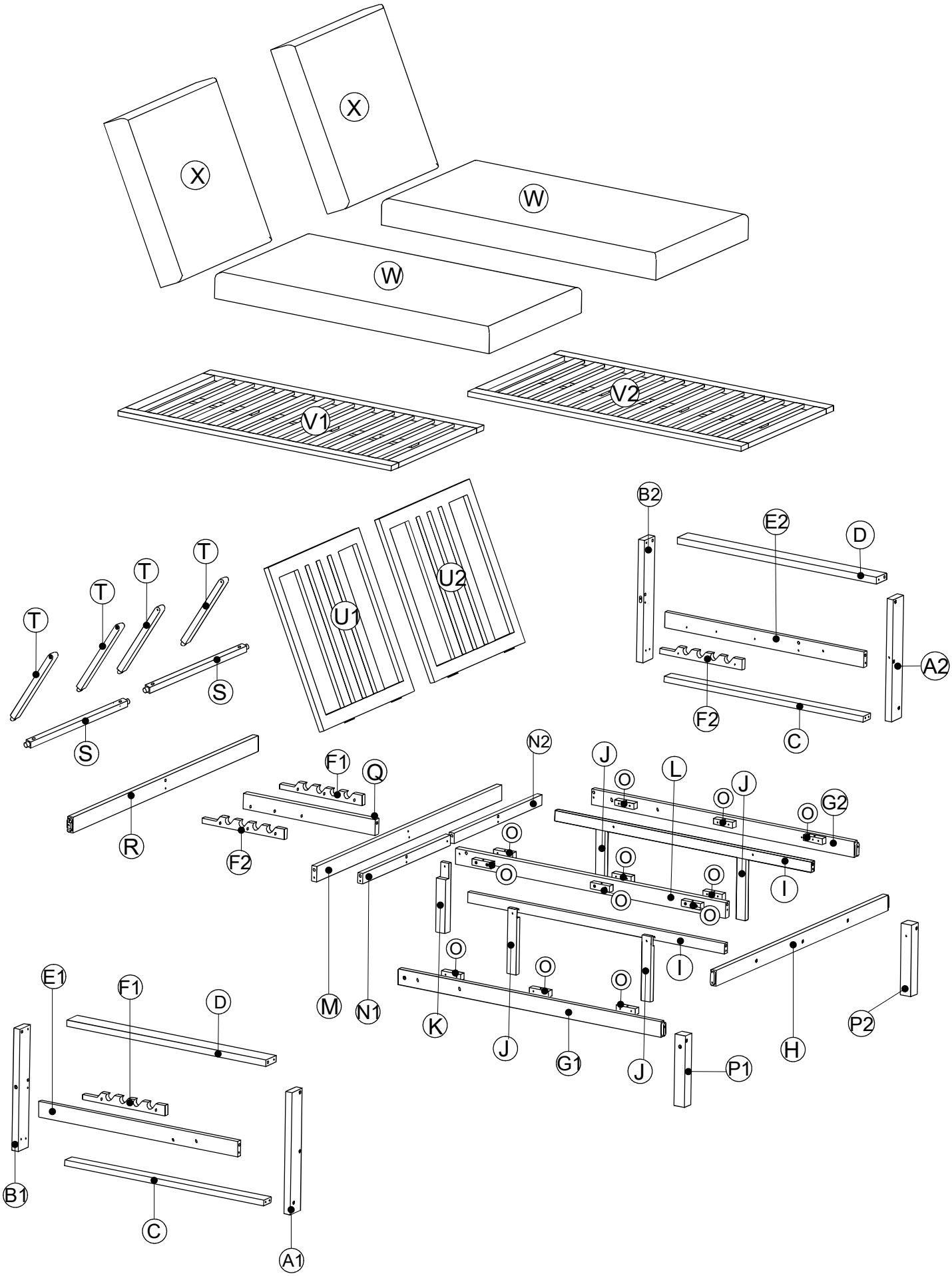
X
X
W
W
V1
V2
U1
U2
T
T
T
T
T
S
S
B2
E2
D
A2
F2
C
R
F1
Q
F2
N2
J
O
L
J
O
O
G2
O
I
M
N1
K
J
G1
J
P1
H
P2
E1
F1
D
B1
C
A1

Parts list

A1 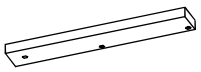 Left Middle Leg (1pc)	A2 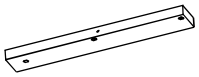 Right Middle Leg (1pc)	B1 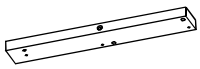 Left Back Leg (1pc)
B2 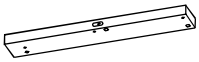 Right Back Leg (1pc)	C  Leg Support Bar (2pcs)	D 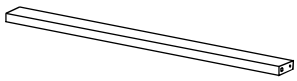 Armrest Bar (2pcs)
E1 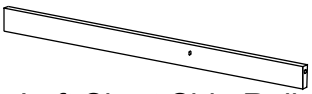 Left Short Side Rail (1pc)	E2  Right Short Side Rail (1pc)	F1  Left Adjustment Bracket (2pcs)
F2 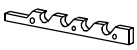 Right Adjustment Bracket (2pcs)	G1  Left Long Side Rail (1pc)	G2 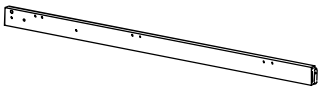 Right Long Side Rail (1pc)
H  Front Bar (1pc)	I  Seat Panel Support Bar (2pcs)	J 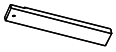 First Support Leg (4pcs)
K 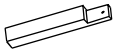 Second Support Leg (1pc)	L 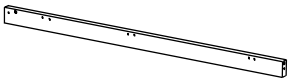 Center Vertical Bar (1pc)	M 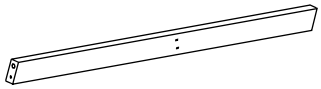 Long Horizontal Bar (1pc)
N1 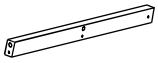 Left Horizontal Bar (1pc)	N2 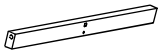 Right Horizontal Bar (1pc)	O 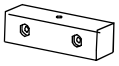 Connect Block (12pcs)
P1 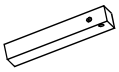 Left Front Leg (1pc)	P2 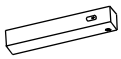 Right Front Leg (1pc)	Q 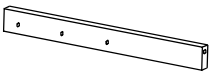 Support Bar (1pc)
R 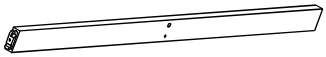 Behind Bar (1pc)	S  Horizontal Lifting Bar (2pcs)	T  Vertical Lifting Bar (4pcs)
U1 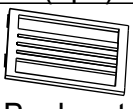 Left Backrest Panel (1pc)	U2 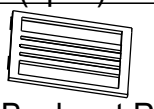 Right Backrest Panel (1pc)	V1 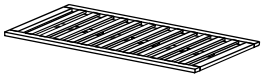 Left Seat Panel (1pc)
V2 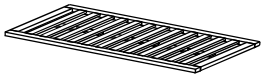 Right Seat Panel (1pc)	W 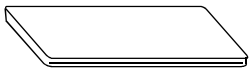 Seat Cushion (2pc)	X 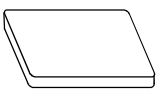 Back Cushion (2pcs)

CARTON CONTENT

F1  Left Adjustment Bracket (2pcs)	F2  Right Adjustment Bracket (2pcs)	J 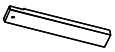 First Support Leg (4pcs)
K 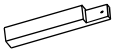 Second Support Leg (1pcs)	O 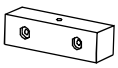 Connect Block (12pcs)	P1 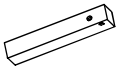 Left Front Leg (1pc)
P2 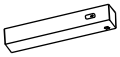 Right Front Leg (1pc)	U1 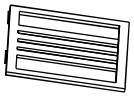 Left Backrest Panel (1pc)	U2 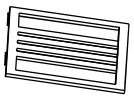 Right Backrest Panel (1pc)
W 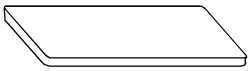 Seat Cushion (1pc)	X  Back Cushion (2pcs)	

A1 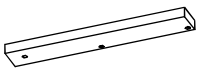 Left Middle Leg (1pc)	A2 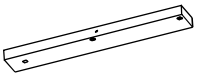 Right Middle Leg (1pc)	B1  Left Back Leg (1pc)
B2 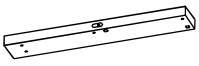 Right BackLeg (1pc)	C  Leg Support Bar (2pcs)	D  Armrest Bar (2pc)
E1 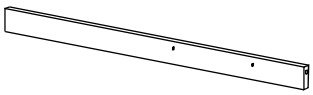 Left Short Side Rail (1pc)	E2 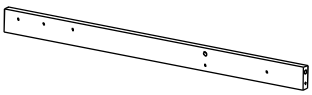 Right Short Side Rail (1pc)	G1 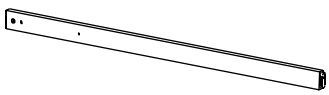 Left Long Side Rail (1pc)
G2 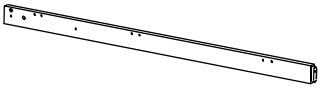 Right Long Side Rail (1pc)	H  Front Bar (1pc)	I  Seat Panel Support Bar (2pcs)
L 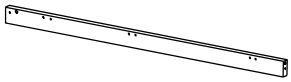 Center Vertical Bar (1pc)	M 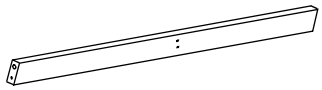 Long Horizontal Bar (1pc)	N1 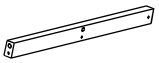 Left Horizontal Bar (1pc)
N2 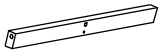 Right Horizontal Bar (1pc)	Q 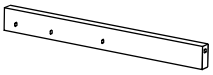 Support Bar (1pc)	R 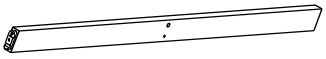 Behind Bar (1pc)
S  Horizontal Lifting Bar (2pcs)	T 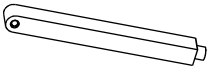 Vertical Lifting Bar (4pcs)	V1 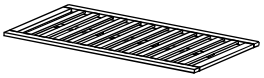 Left Seat Panel (1pc)
V2 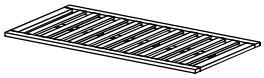 Right Seat Panel (1pc)	W 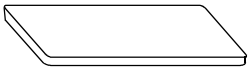 Seat Cushion (1pc)	

Hardware list

1  Screw M6x90mm (7pcs)	2  Screw M6x60mm (28pcs)	3  Screw M6x30mm (11pcs)
4 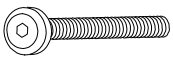 Bolt M6x80mm (3pcs)	5 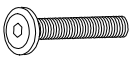 Bolt M6x55mm (4pcs)	6  Bolt M6x30mm (8pcs)
7  Sleeve Nut M6x15mm (13 pcs)	8  Metal corner (2pcs)	9  L-Bracket (4pcs)
10  Plastic Washer Ø10/Ø20x2mm (5pcs)	11  Screw M4x15mm (25pcs)	12  Screw M4x25mm (31pcs)
13  Screw M4x35mm (13pcs)	14 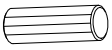 Wooden Dowel φ10x30mm (27pcs)	15  Allen Wrench (2pcs)
16 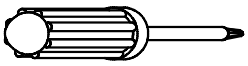 Screwdriver (Not provided)		

Step 1

 A1 x1	 B1 x1	 C x1	 D x1	 E1 x1	 2 x 6	 14 x 6	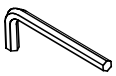 15 x 1

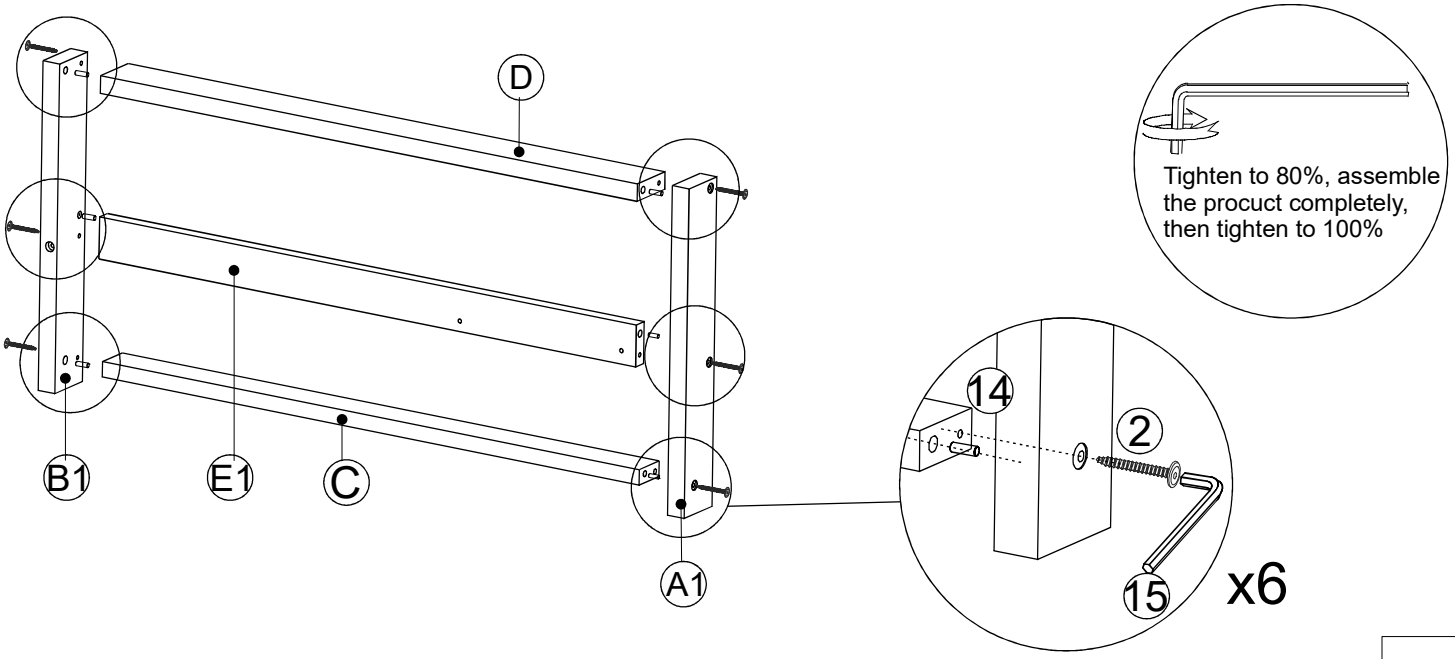

Step 2

F1 x 1	3 x 3	15 x 1

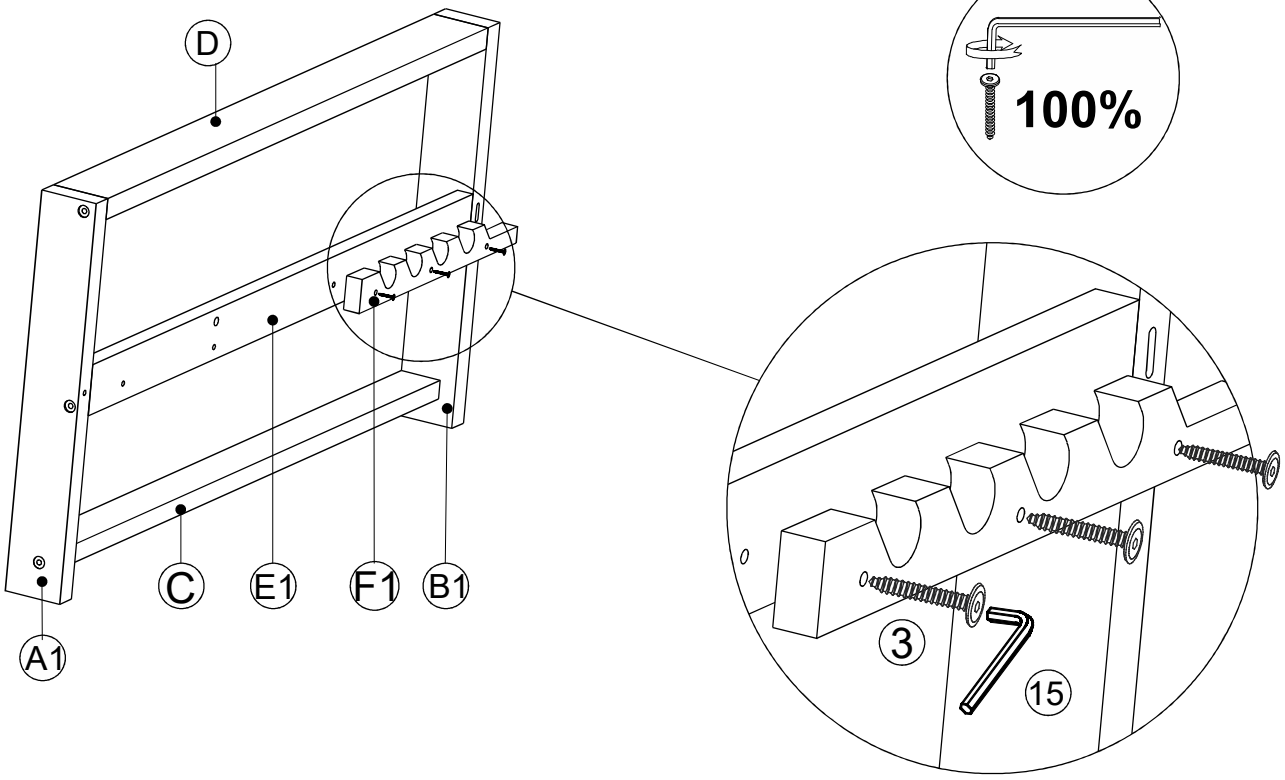

Step 3

A2 x1	B2 x1	C x1	D x1	E2 x1	2 x 6	14 x 6	15 x 1

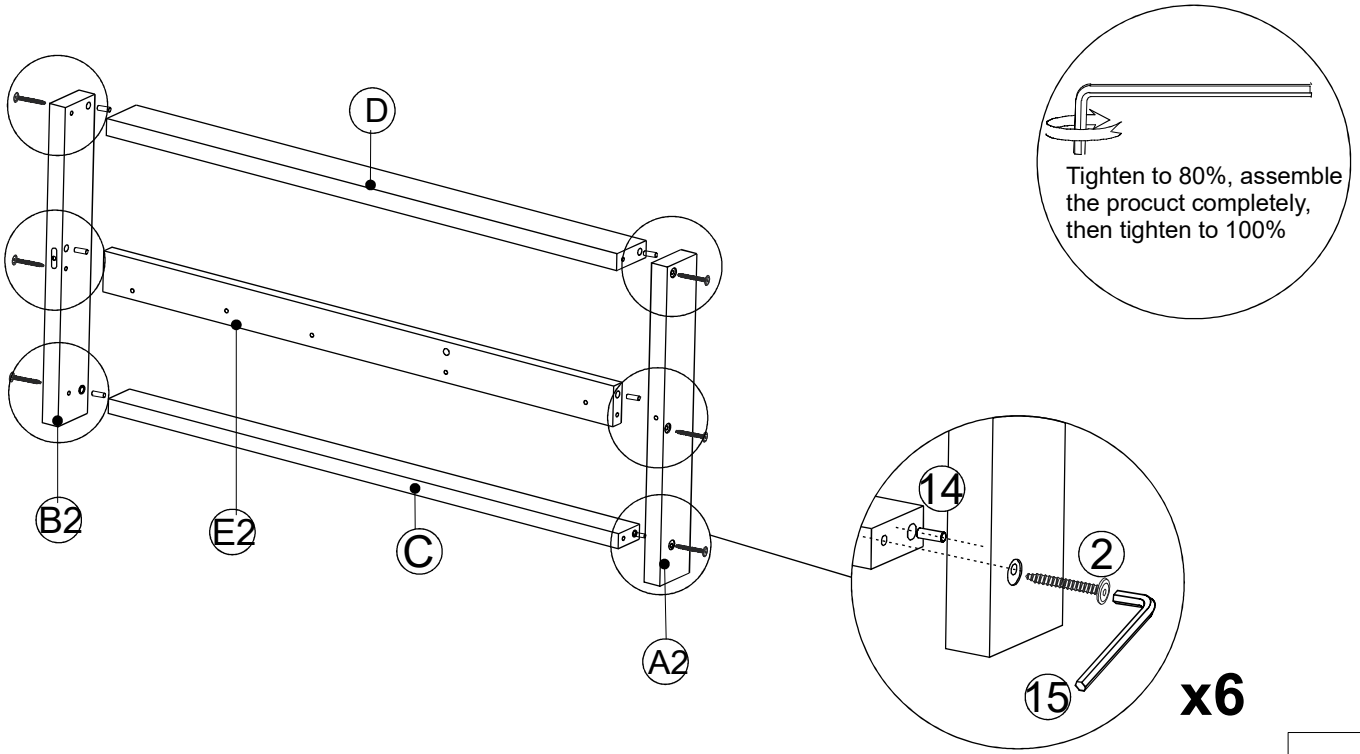

Step 4

F2 x 1	3 x 3	15 x 1

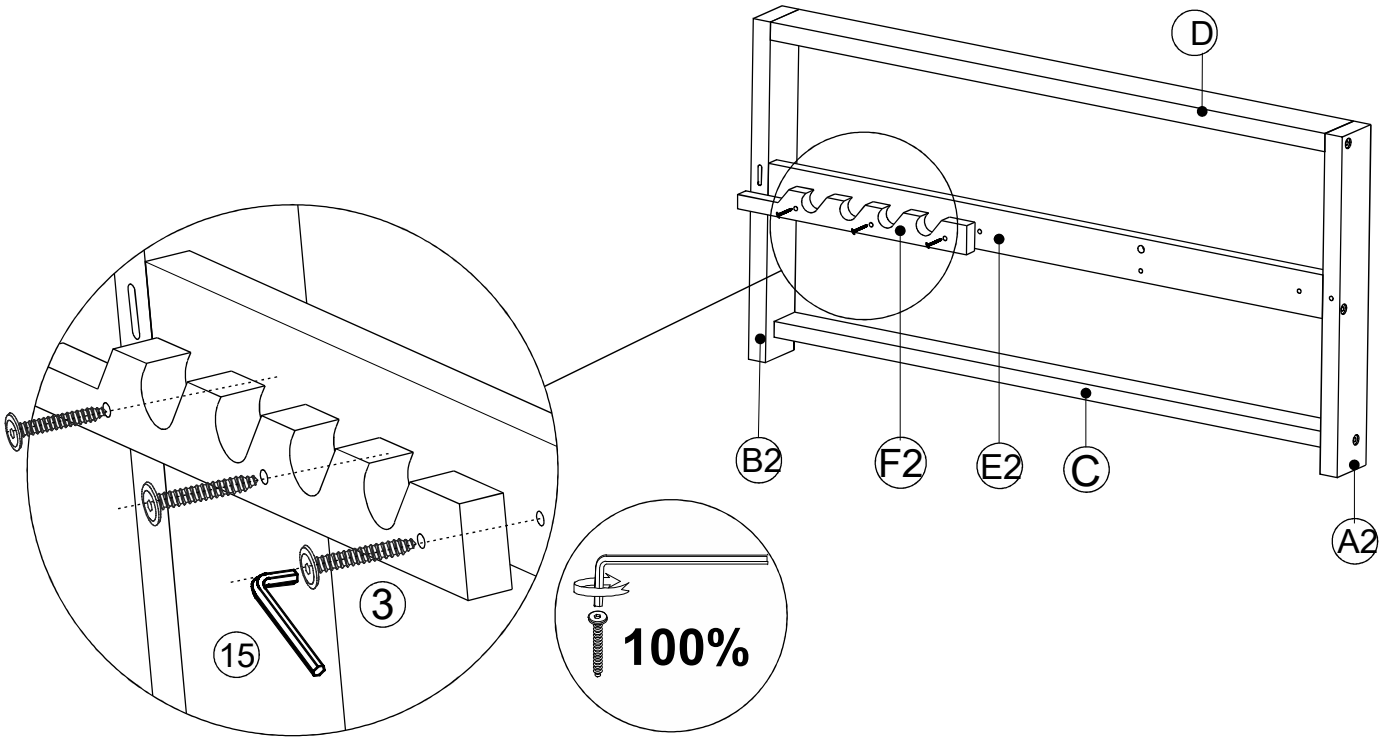

Step 5

F1 x 1	F2 x 1	Q x 1	5 x 3	7 x 3	15 x 2

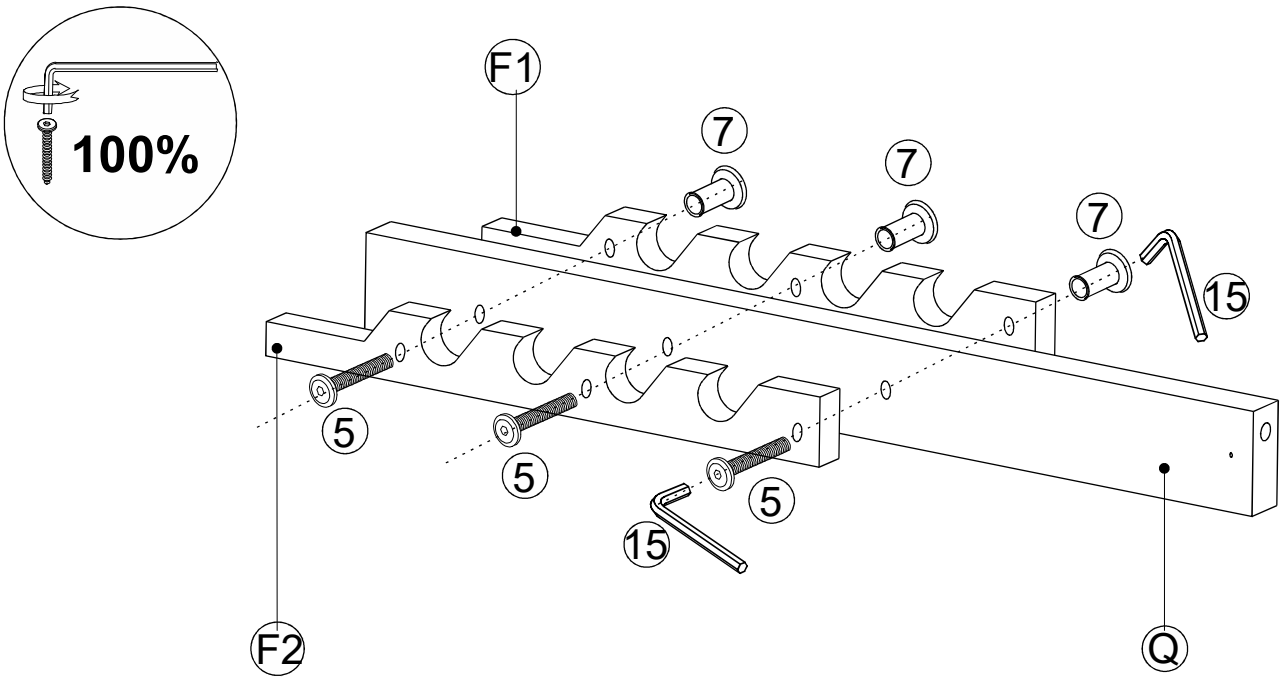

Step 6

G1 x 1	G2 x 1	L x 1	O x 12	12 x 24	16 x 1

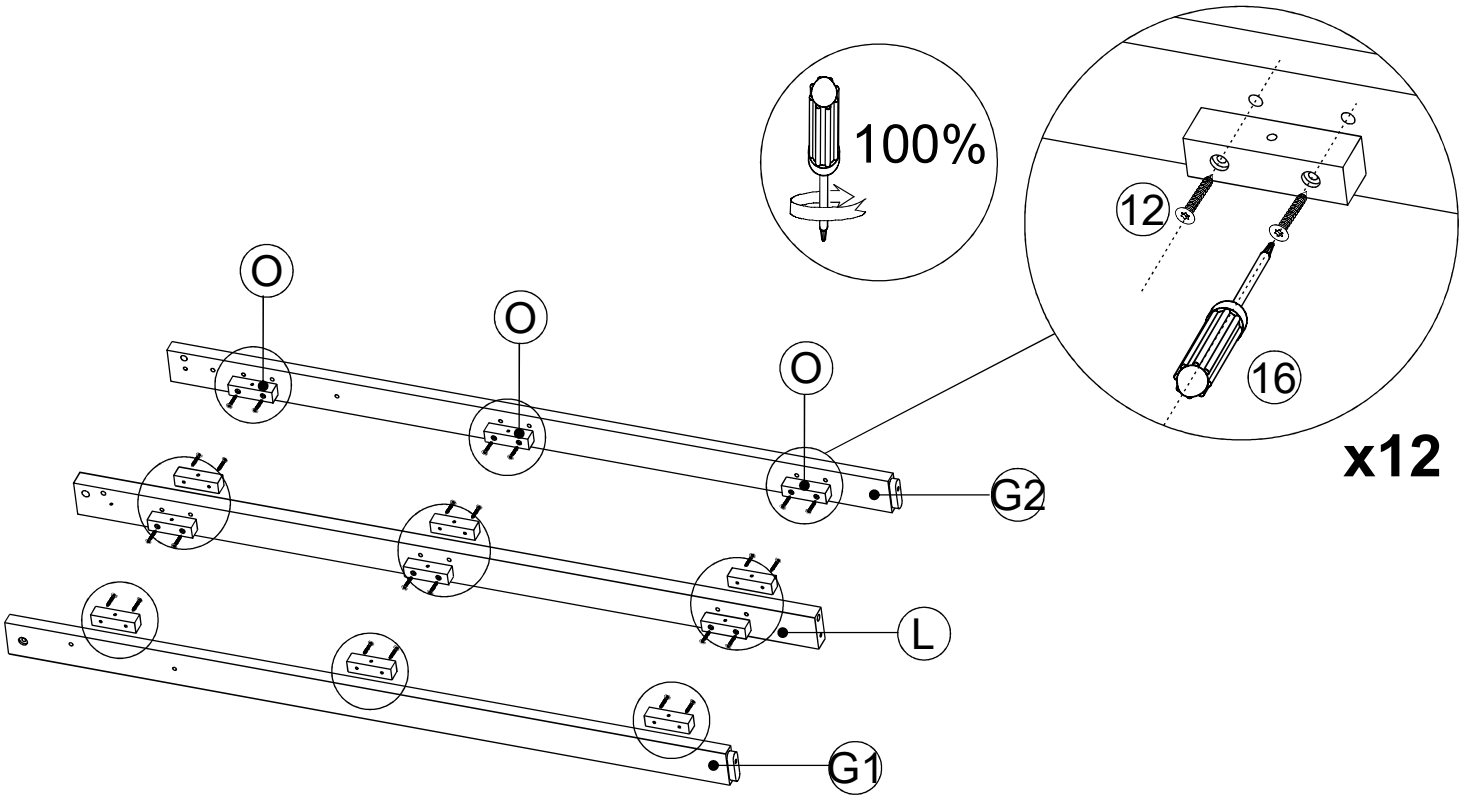

Step 7

H x 1	P1 x 1	P2 x 1	1 x 2	15 x 1

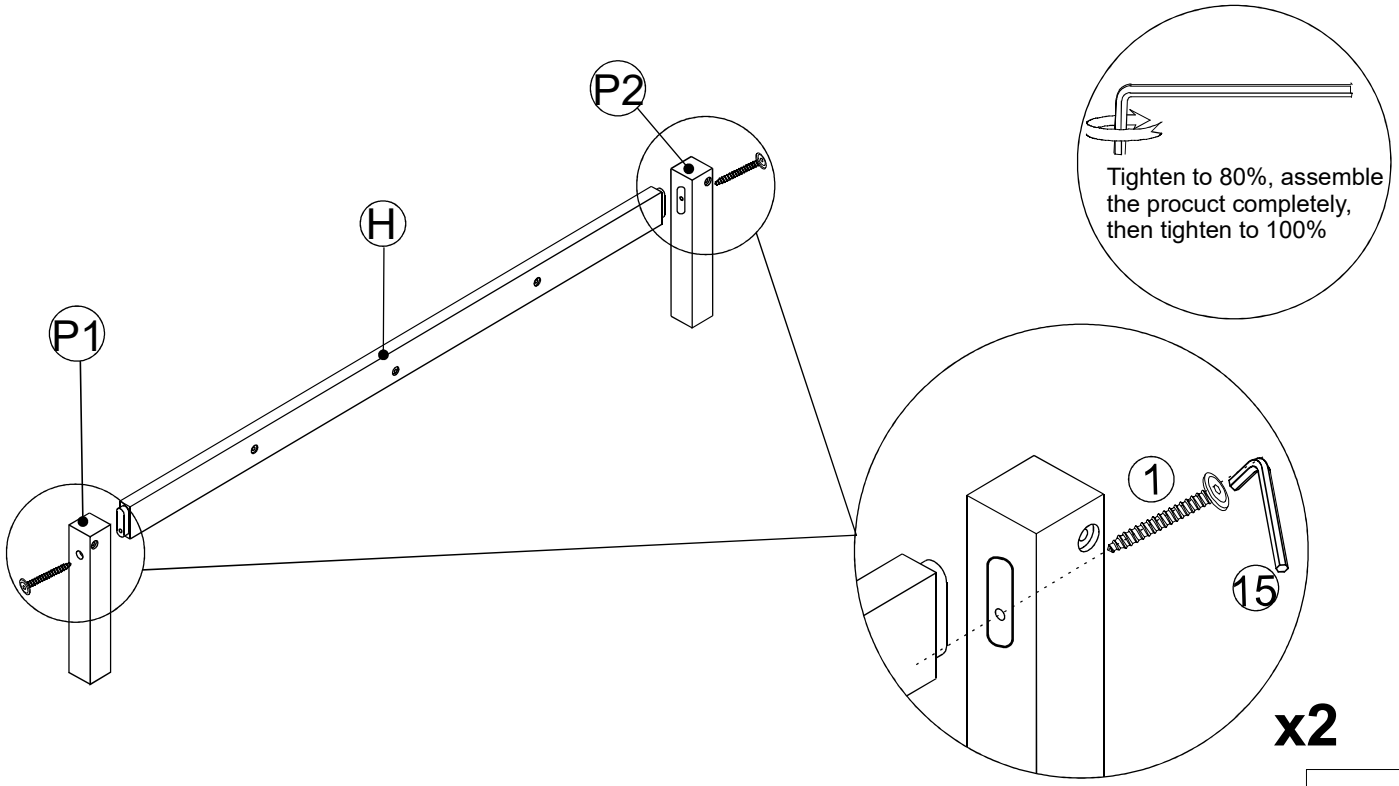

Step 8

I x 2	1 x 2	2 x 3	14 x 3	15 x 1

Step 6

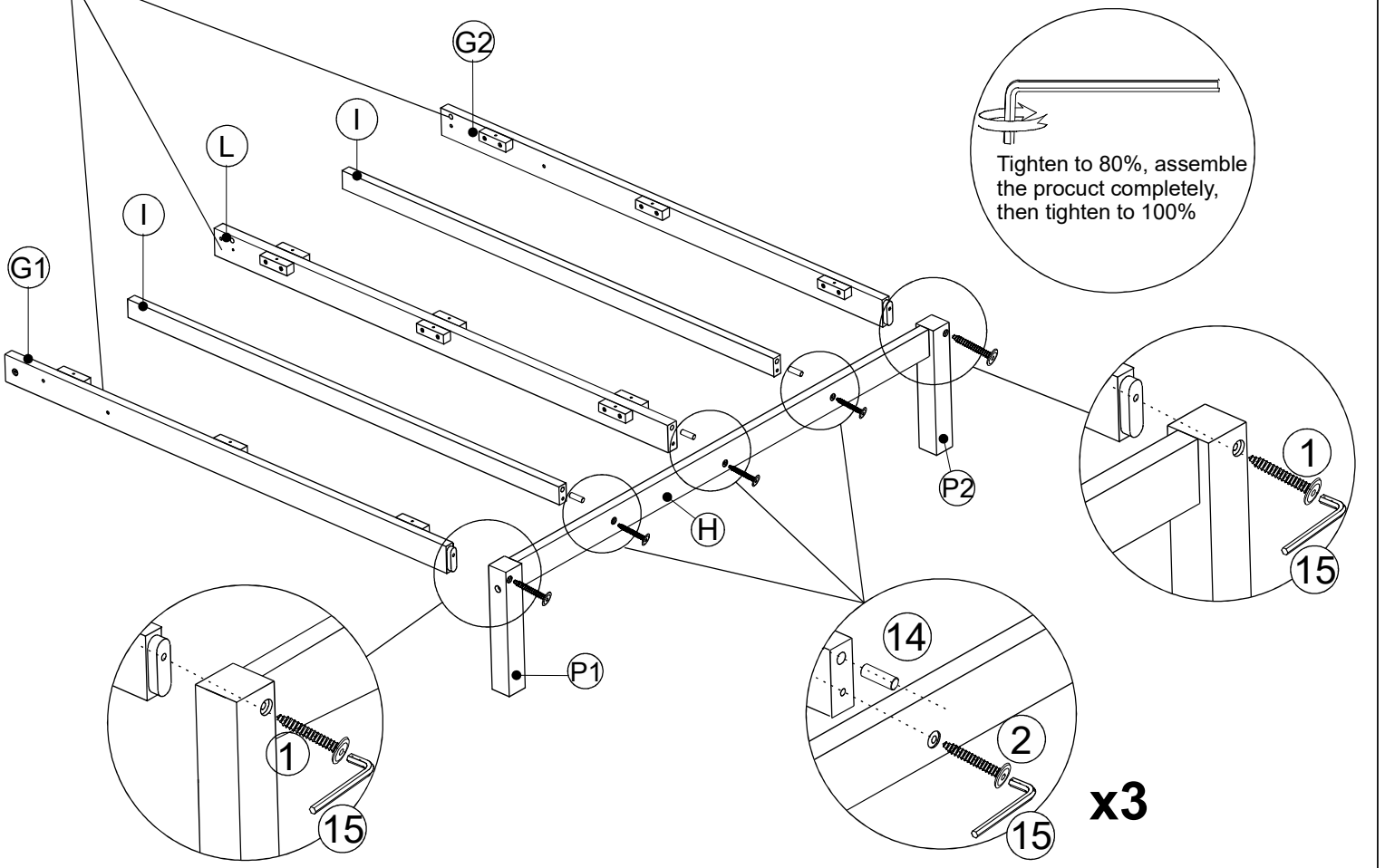

Step 9

N1 x 1	N2 x 1	2 x 4	14 x 6	15 x 1

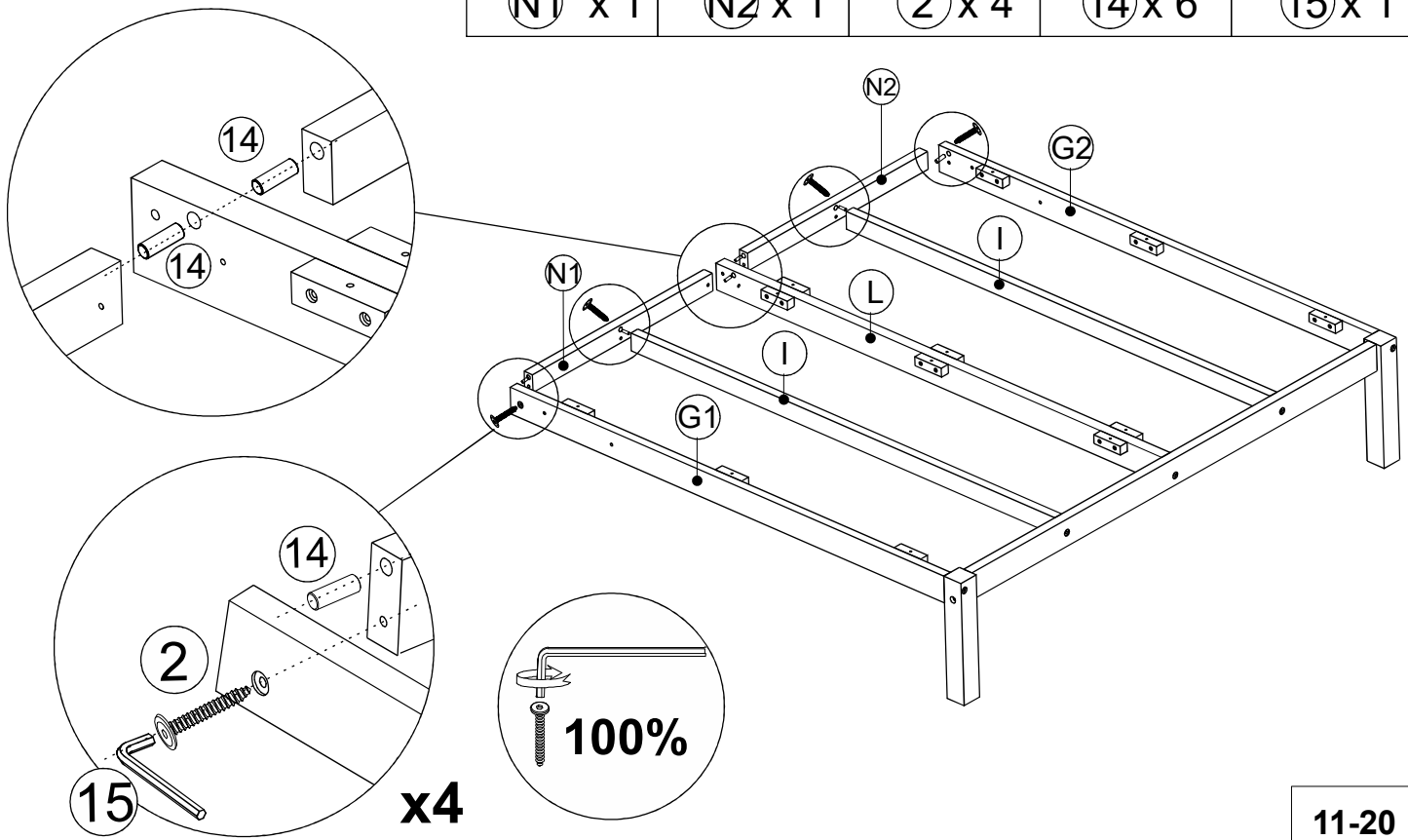

Step 10

J x 4	K x 1	3 x 4	6 x 1	7 x 1	15 x 2

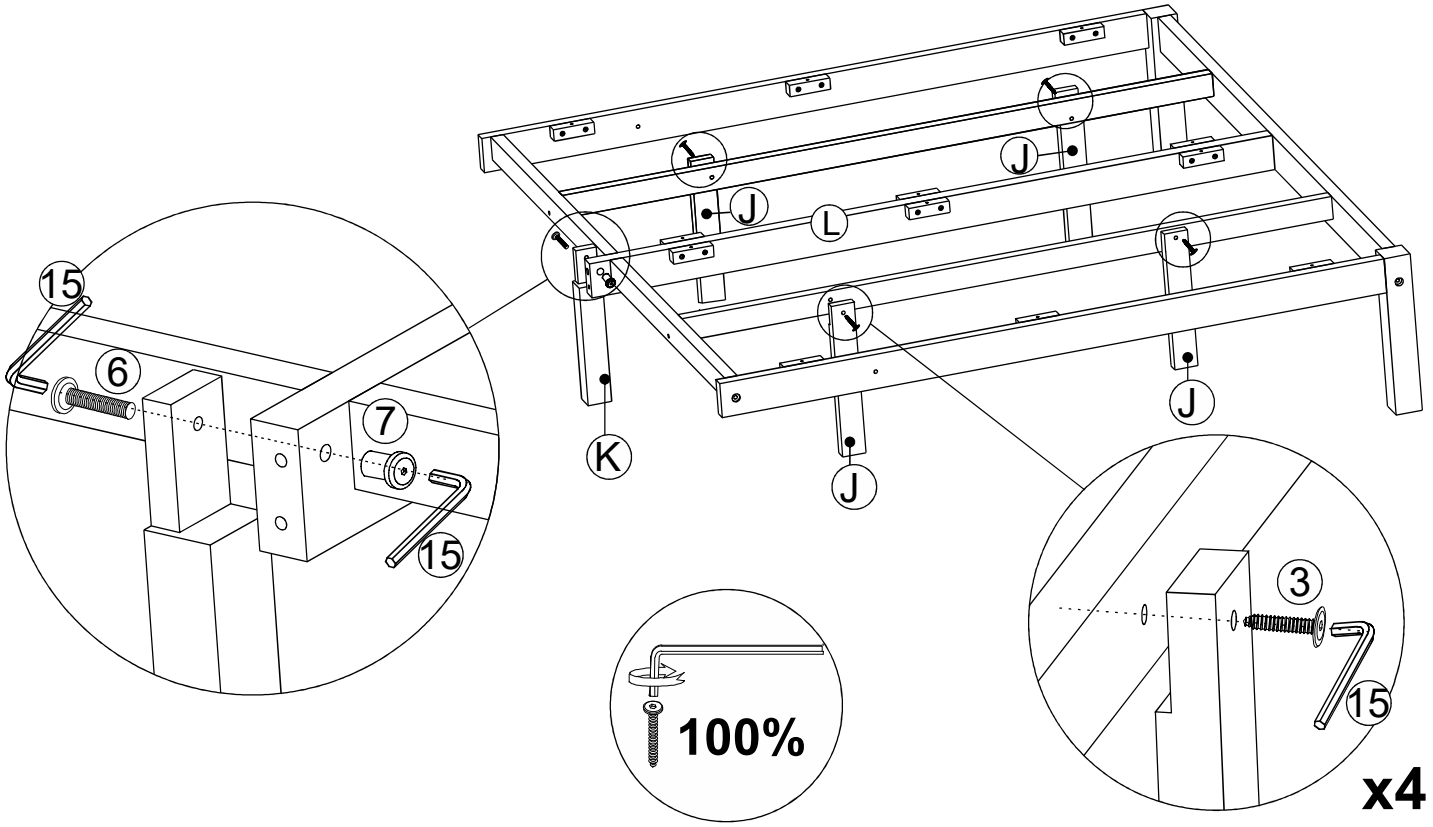

Step 11

M x 1	2 x 1	14 x 1	15 x 1

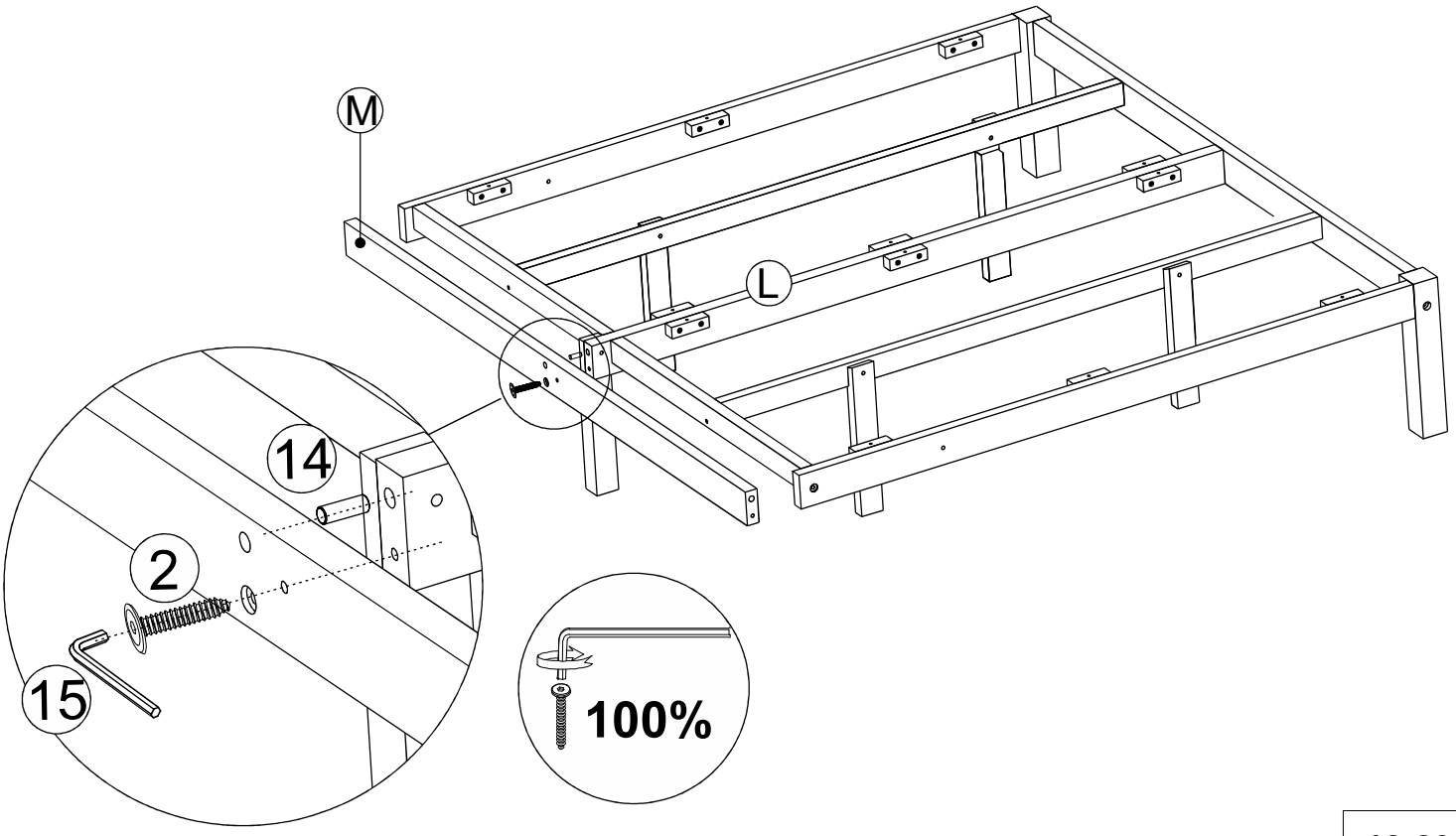

Step 12

2 x 2	4 x 2	6 x 2	7 x 4	14 x 2	15 x 2

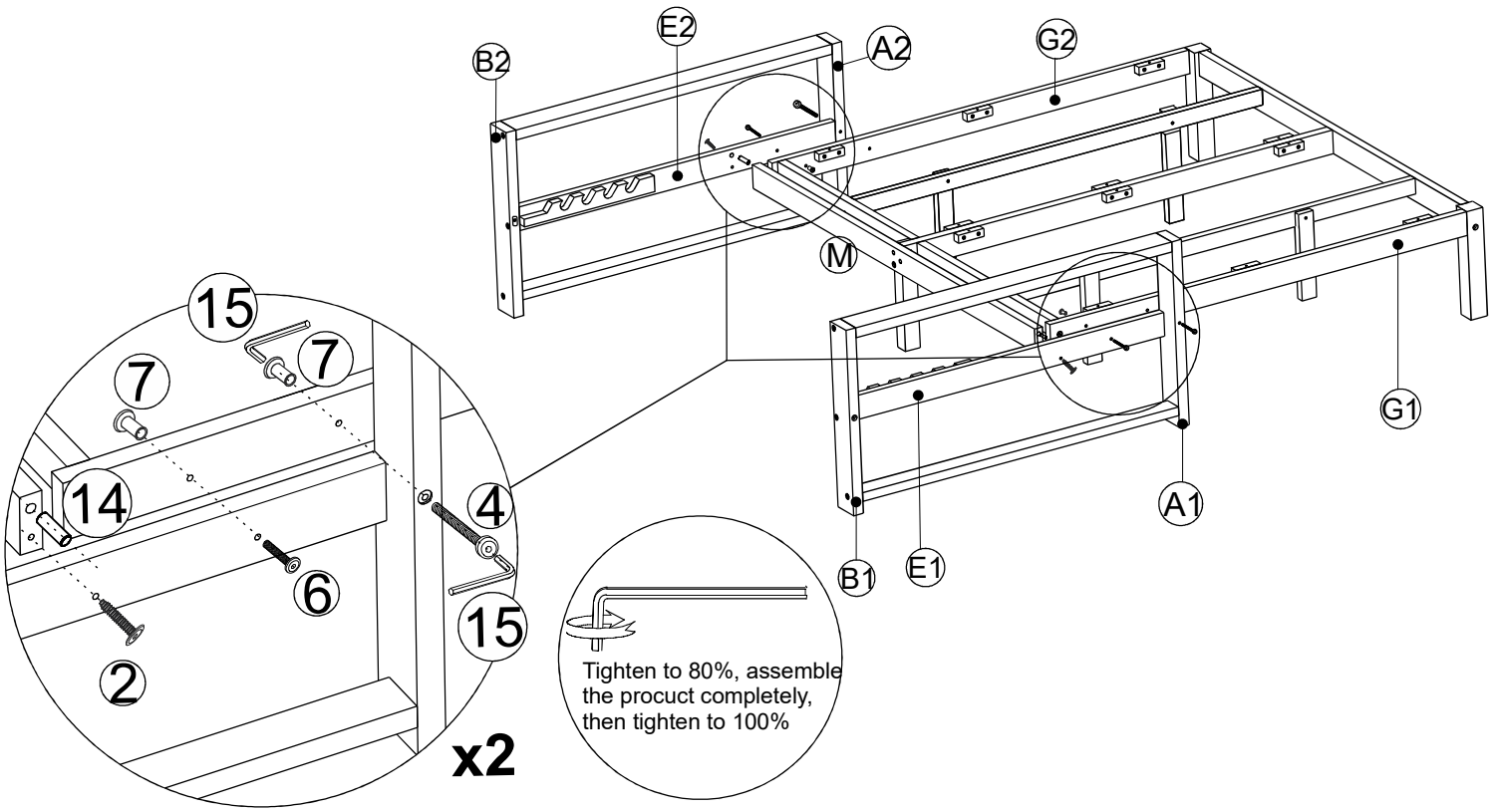

Step 13

R x 1	1 x 2	2 x 1	14 x 2	15 x 1

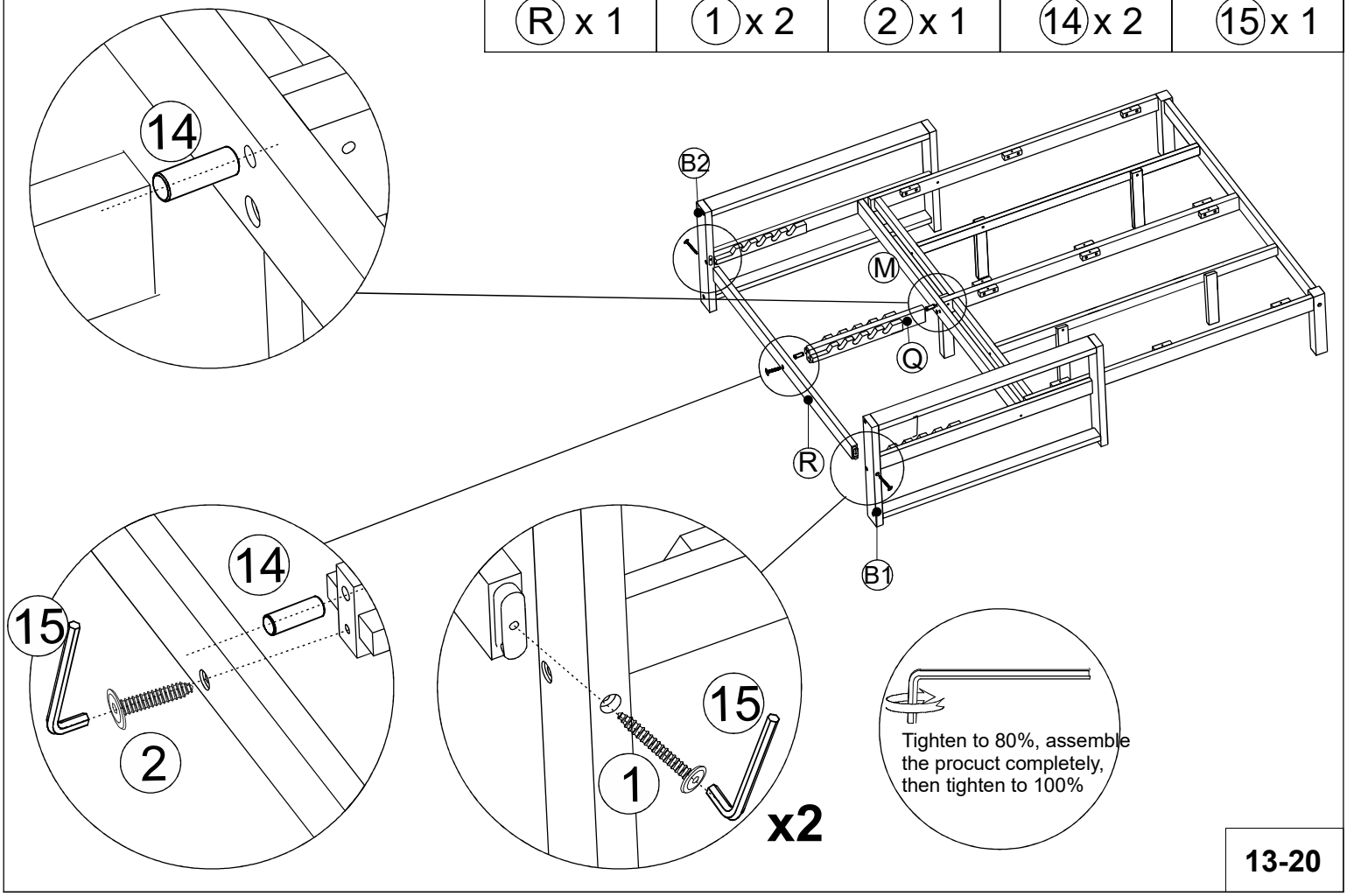

Step 14

8 x 2	11 x 4	16 x 1

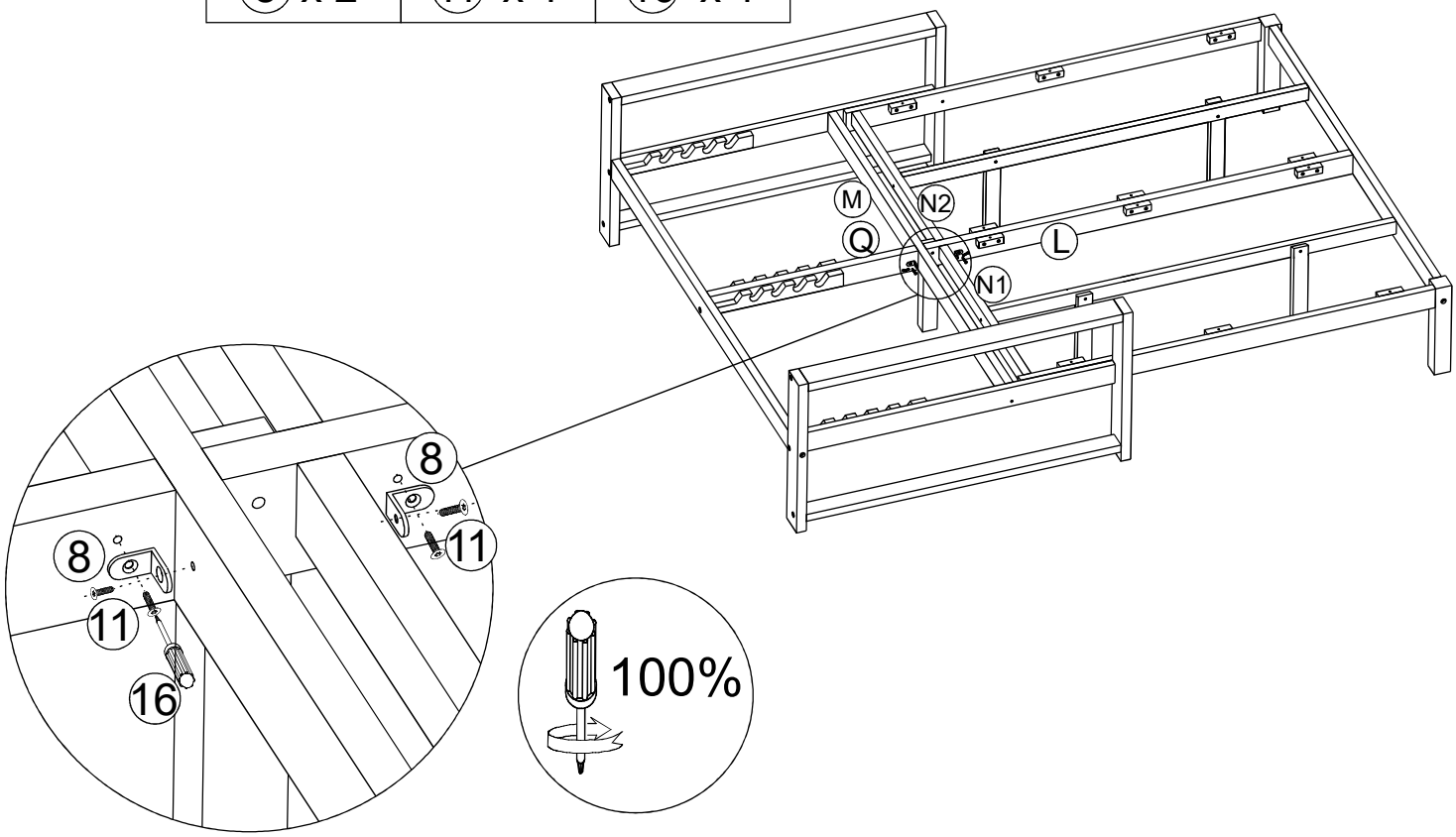

Step 15

V1 x 1	V2 x 1	13 x 12	16 x 1

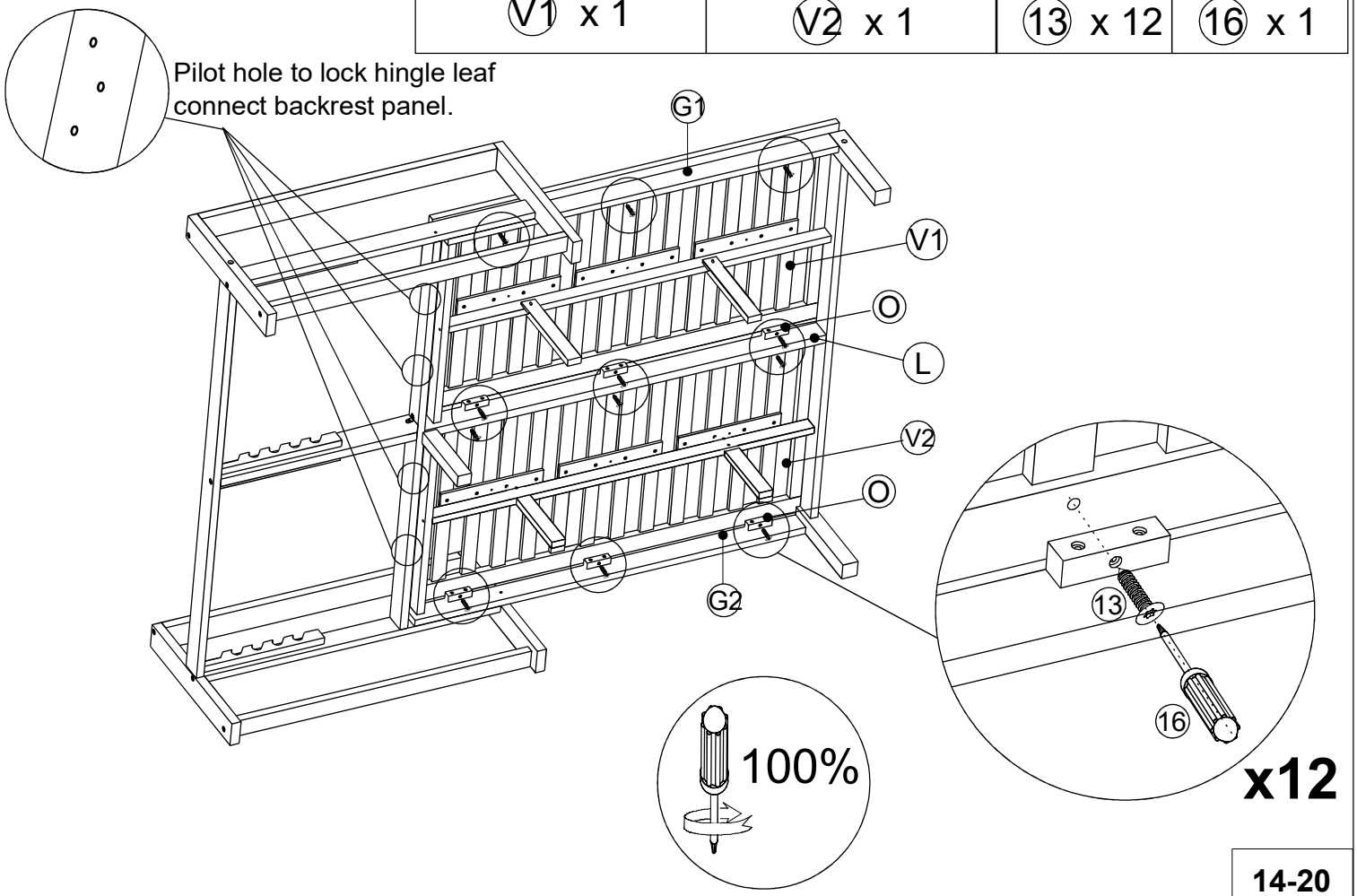

Step 16

12 x 6	16 x 1

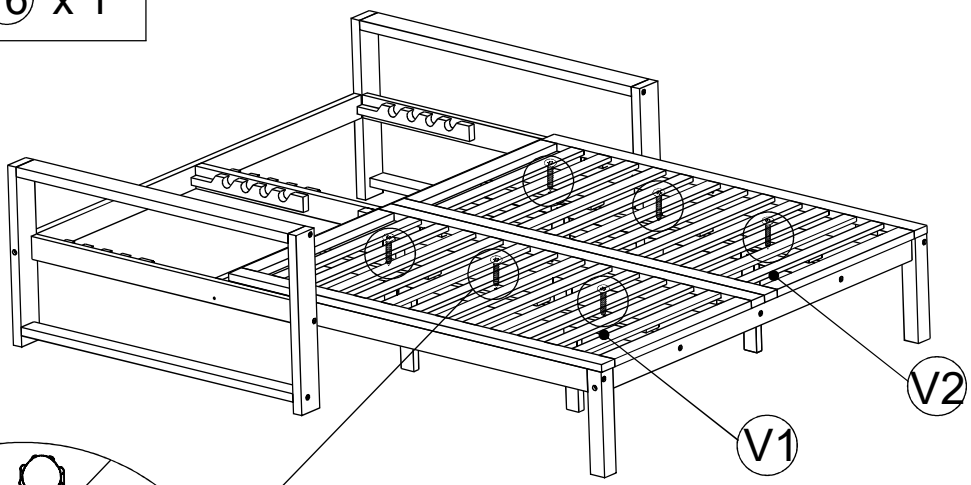

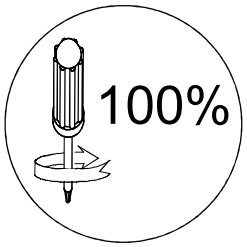

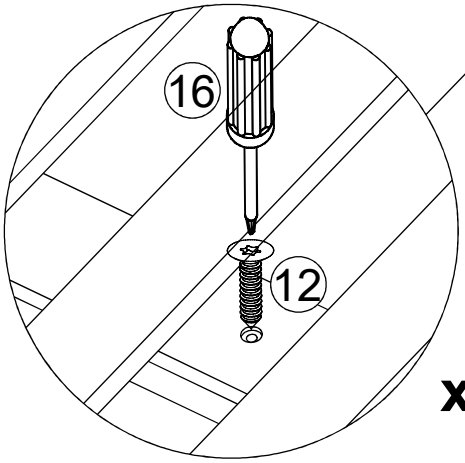

Step 17

S x 2	T x 4	2 x 4	6 x 4	7 x 4	9 x 4	10 x 4	15 x 2

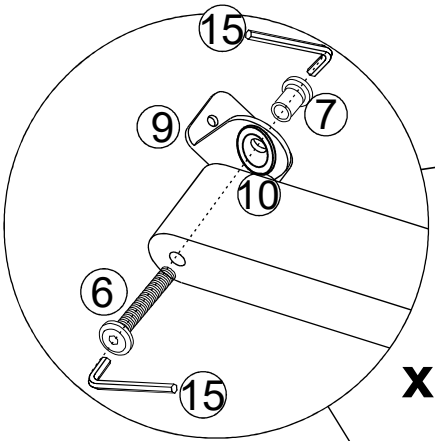

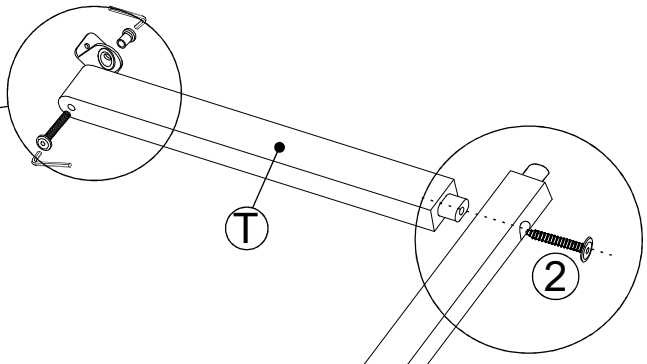

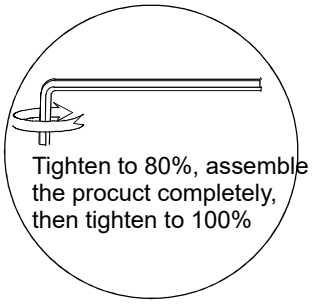

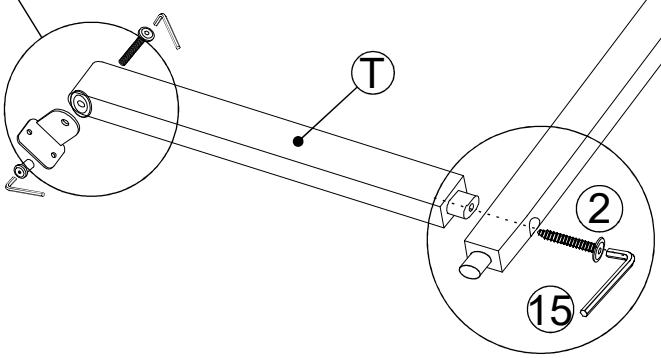

Step 18

U1 x 1	11 x 4	16 x 1

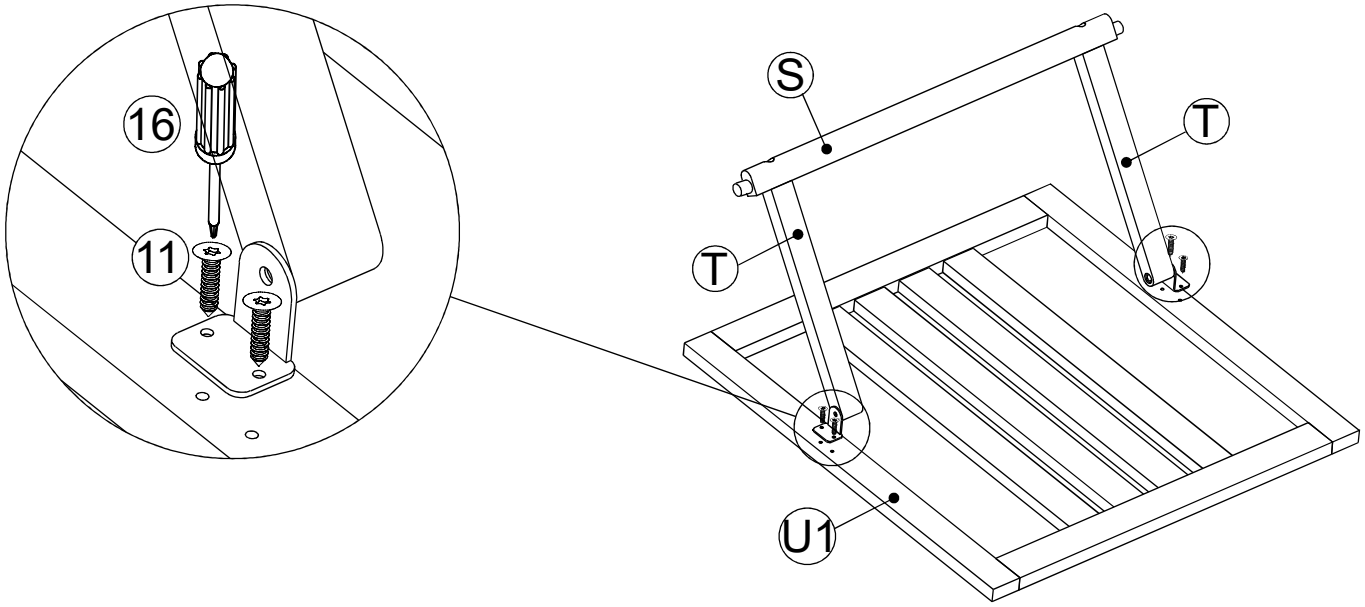

Step 19

U2 x 1	11 x 4	16 x 1

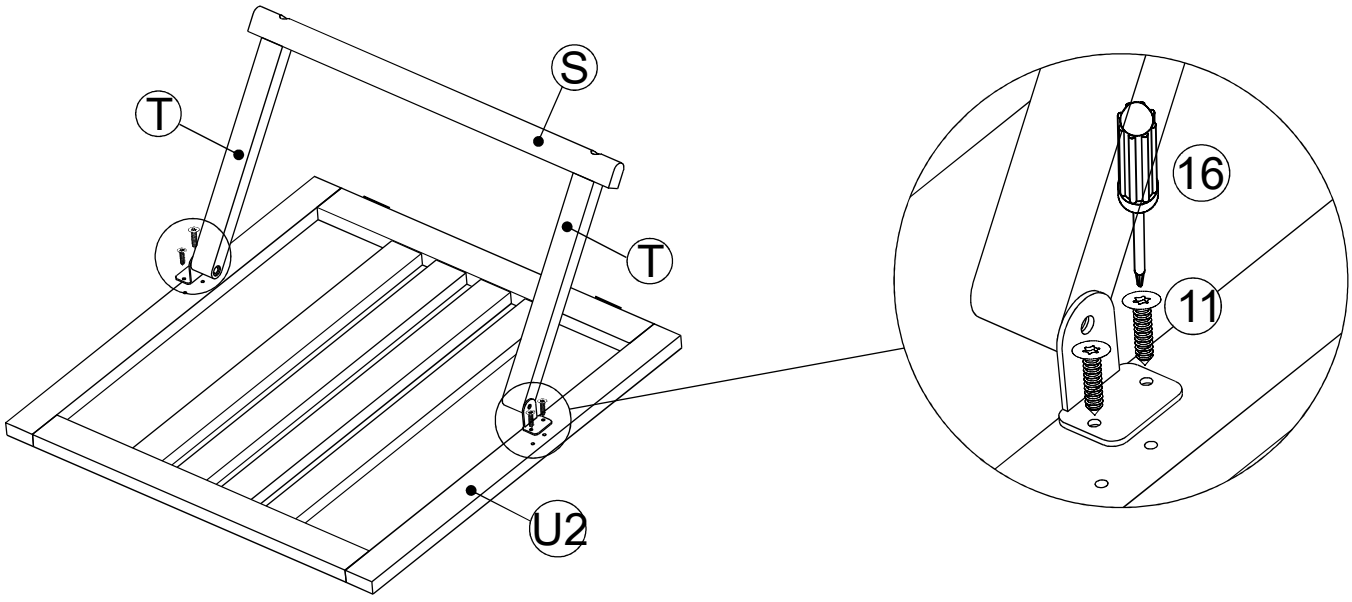

Step 20

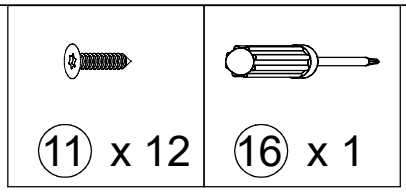

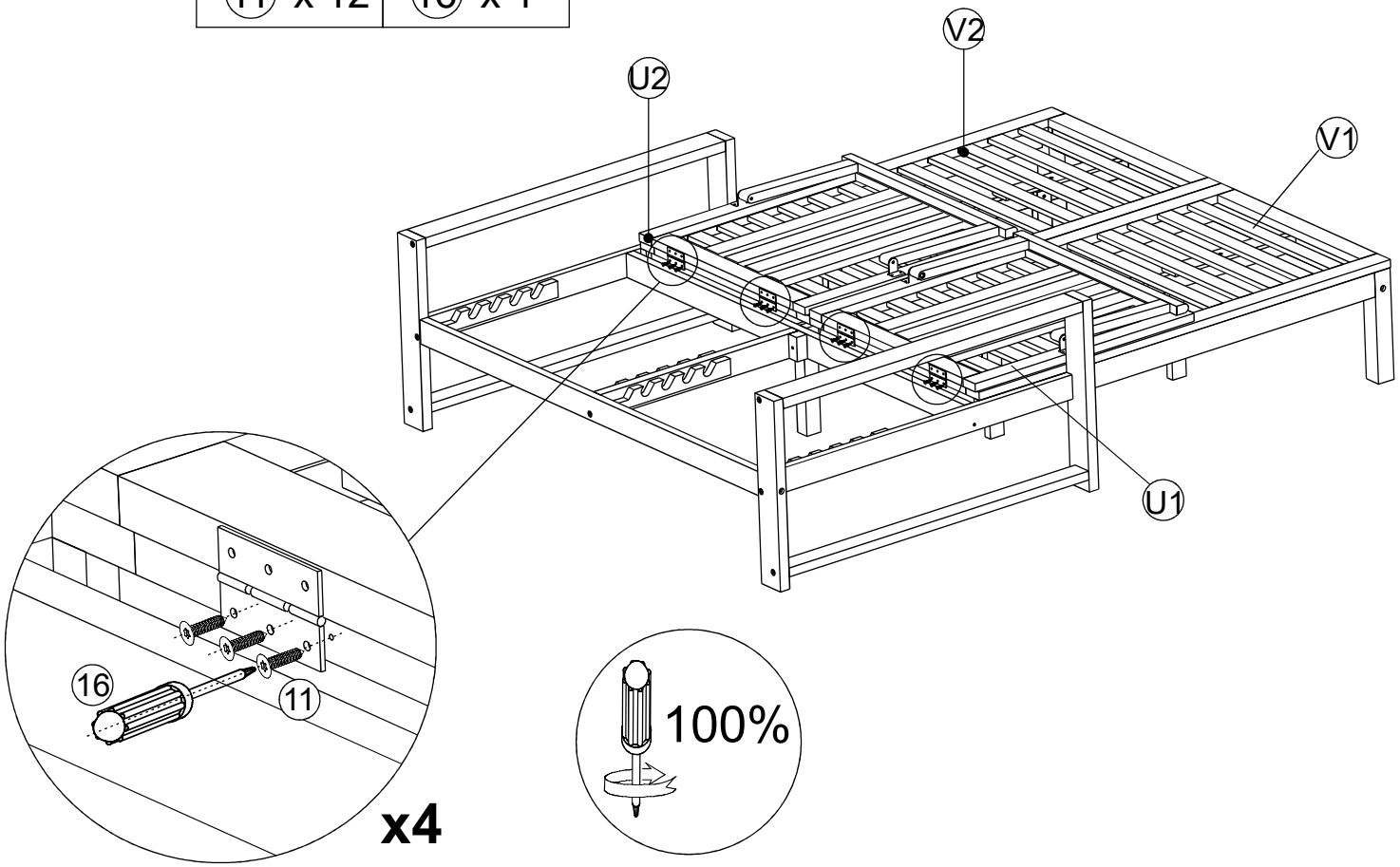

Step 21

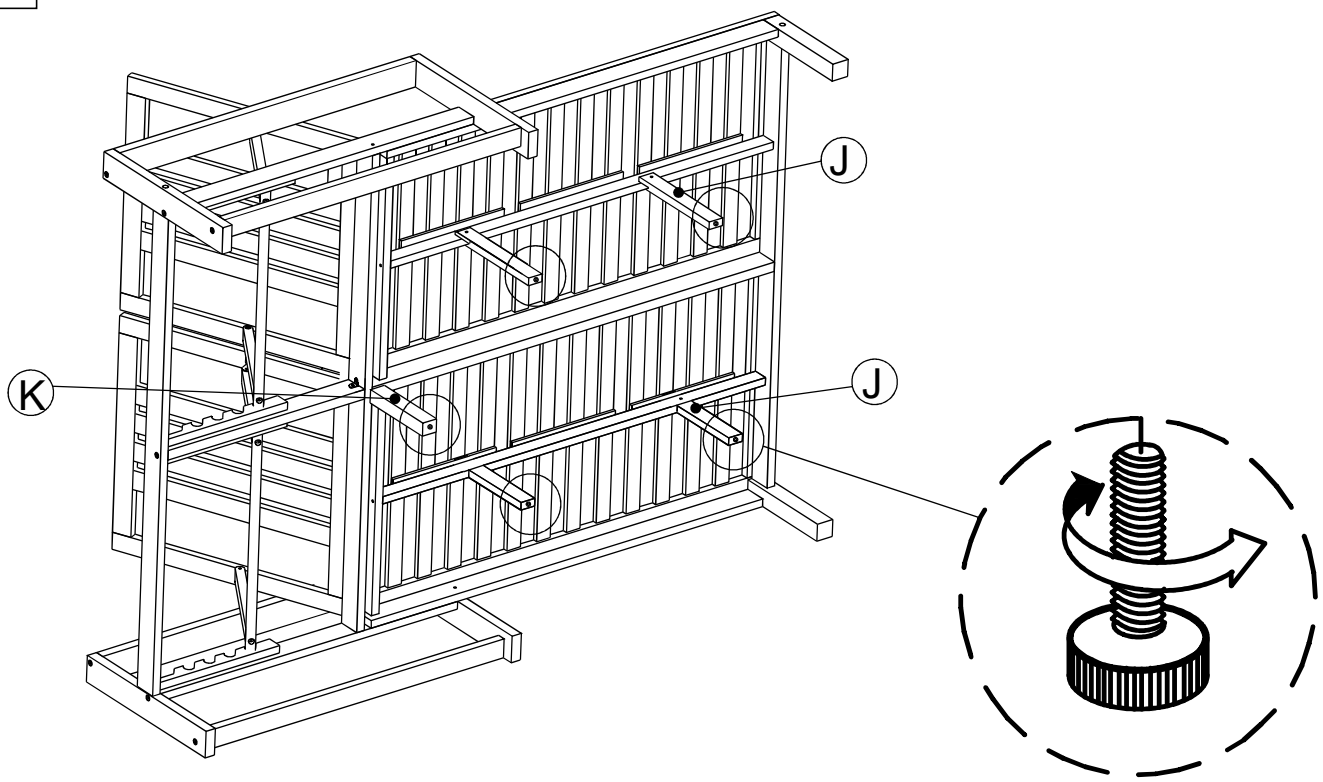

Adjust Pre-installed Levelers height for balance

Step 22

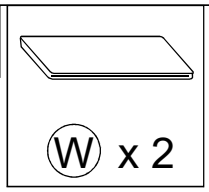

Ⓦ x 2

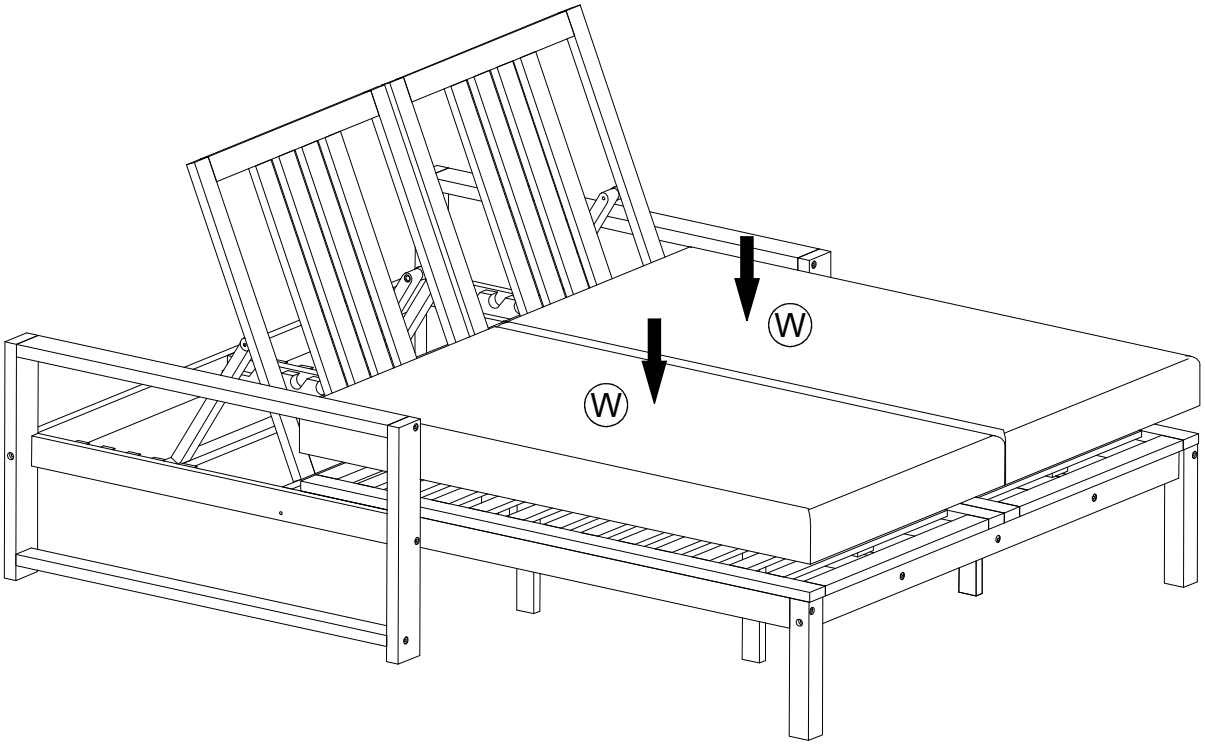

Step 23

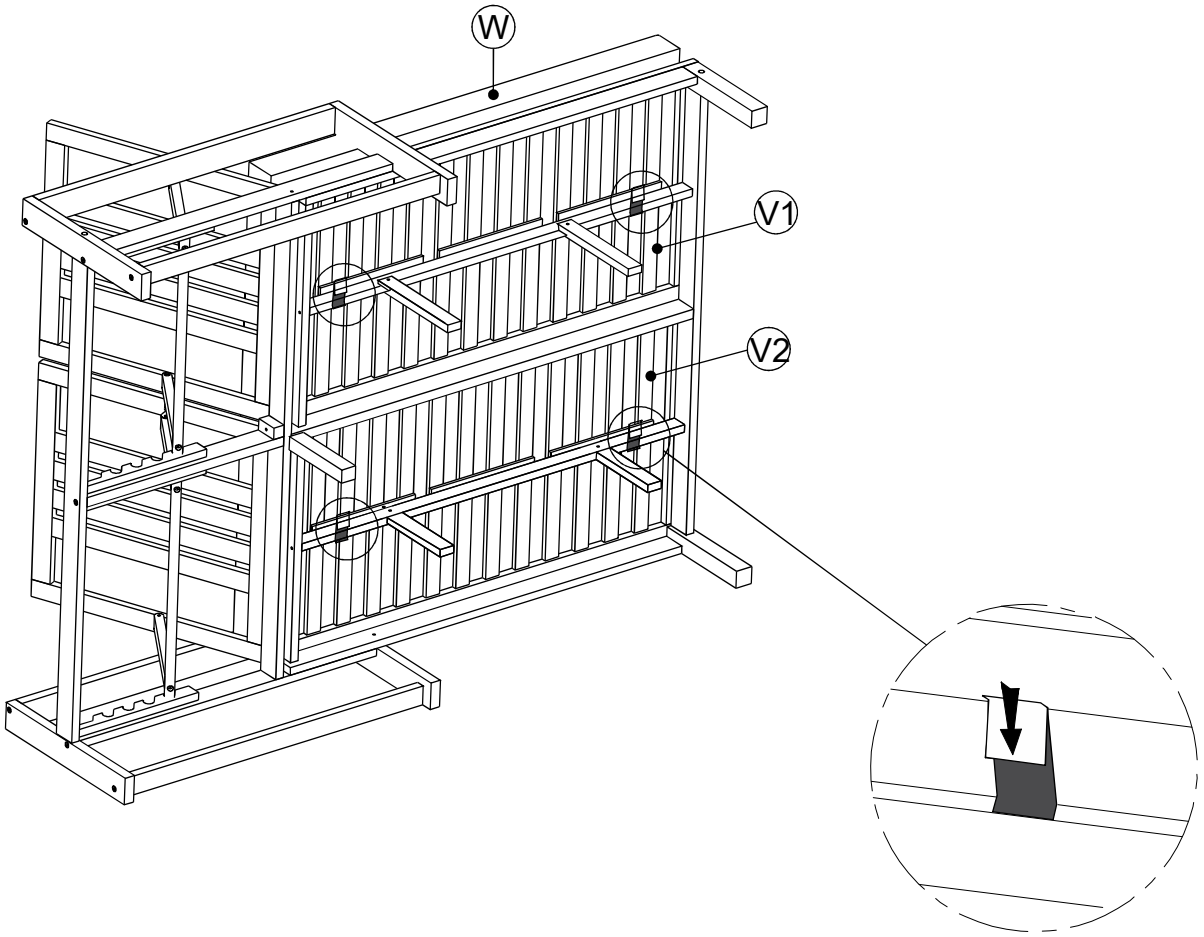

Step 24

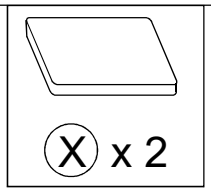

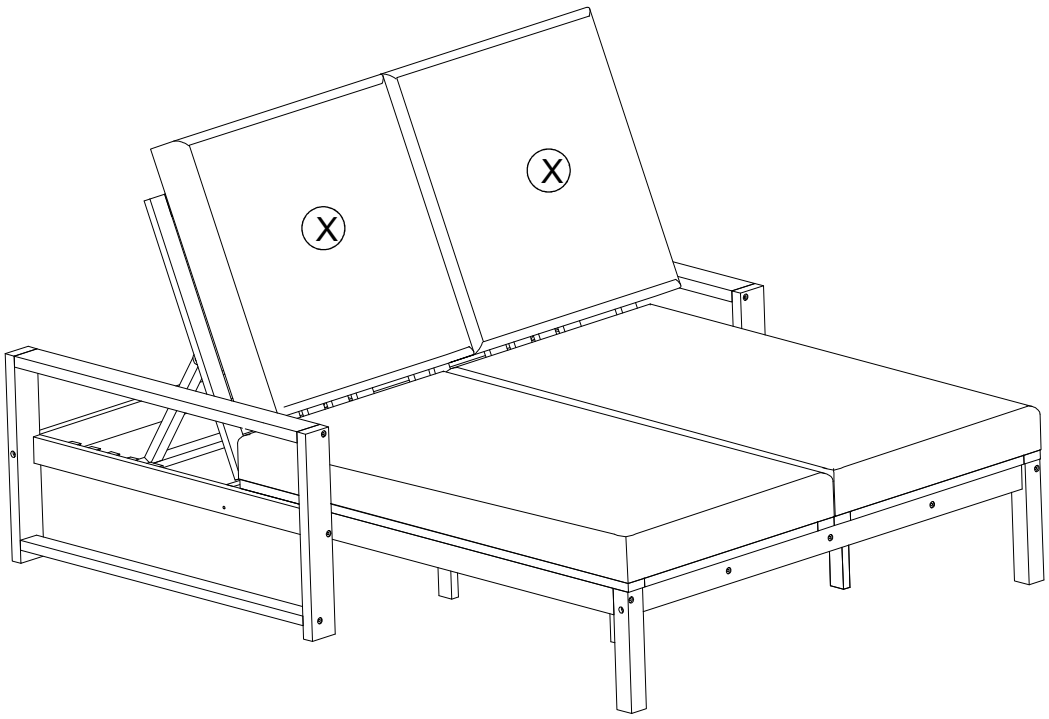

Step 25

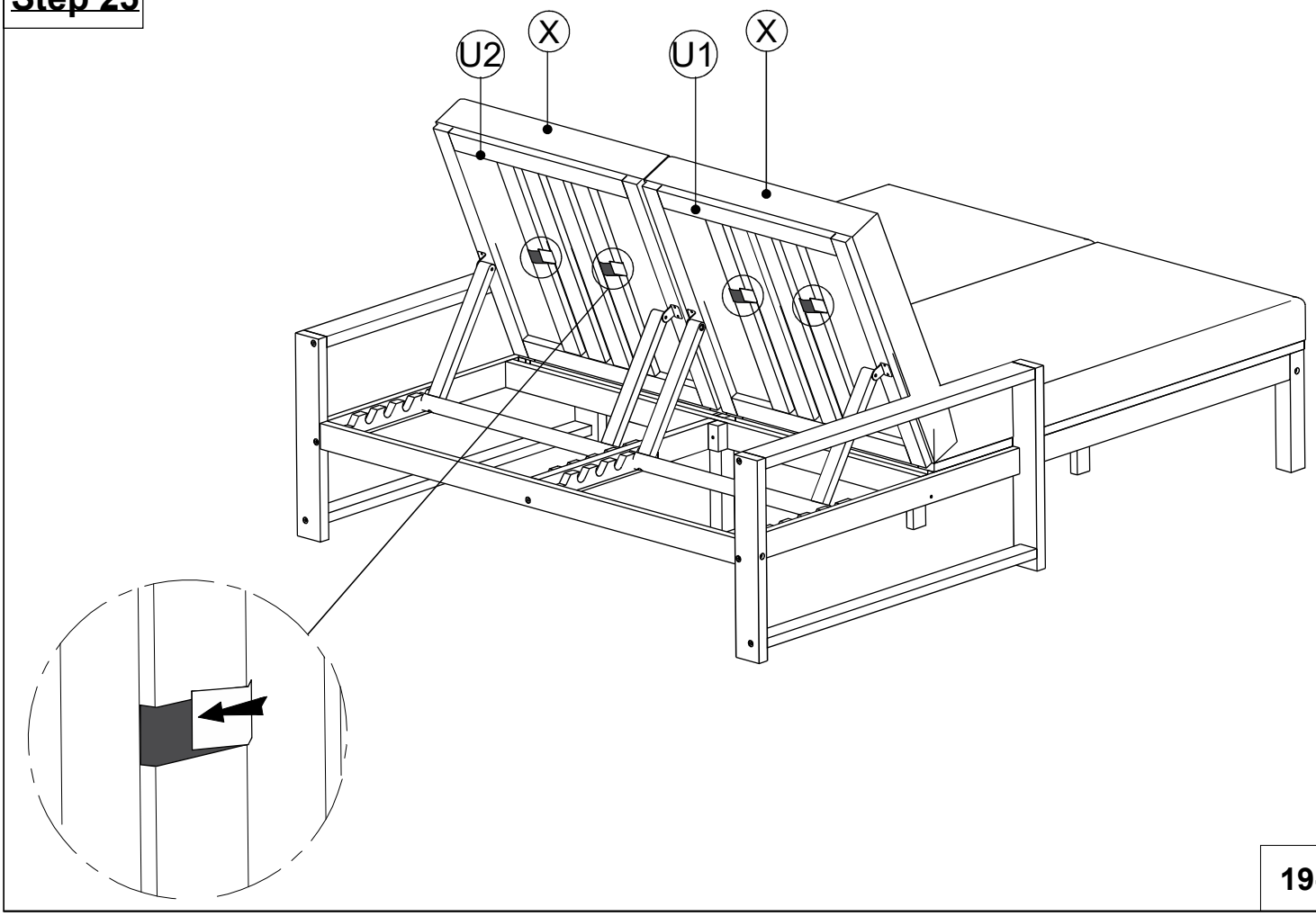

Step 26

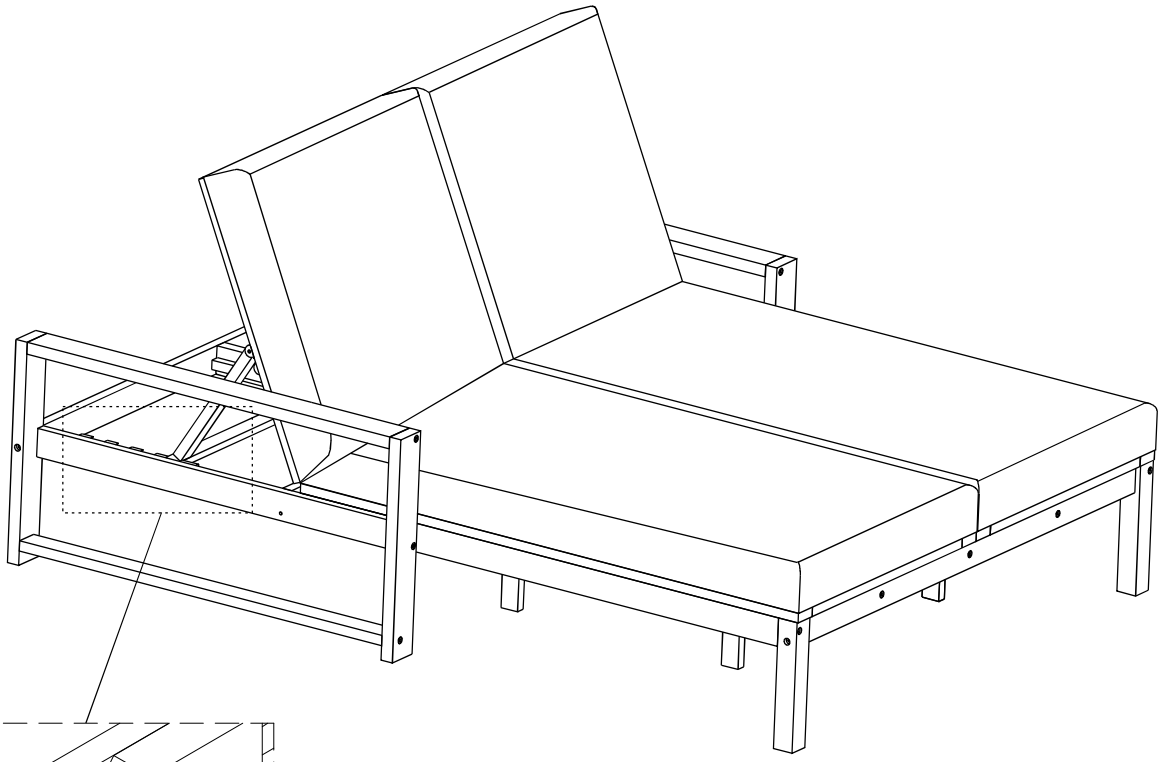

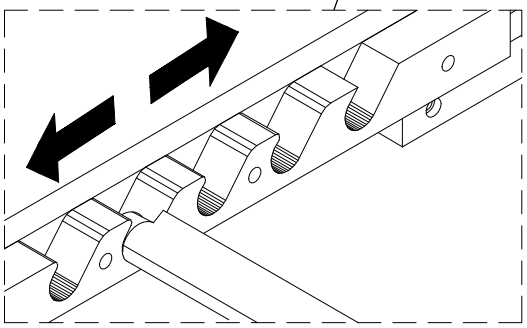

Adjust lever to set the backrest angle

FINISH