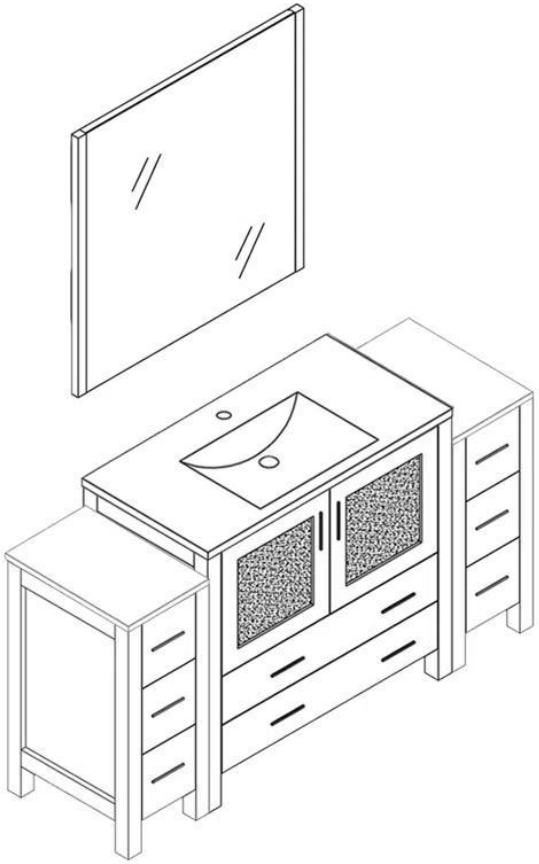

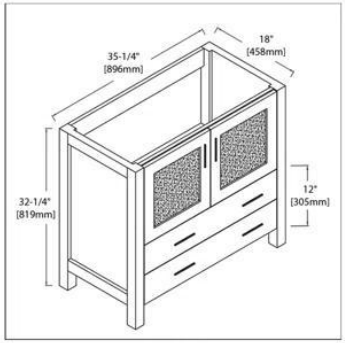

VANITY FRONT

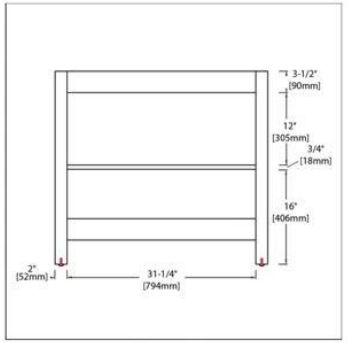

VANITY BACK

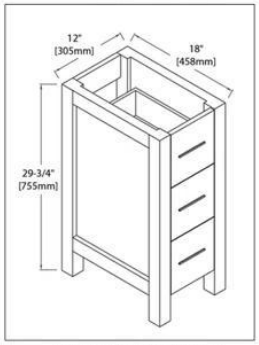

CABINET FRONT

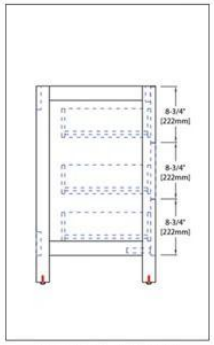

CABINET SIDE

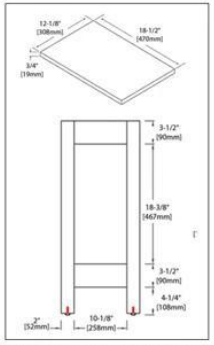

CABINET TOP&BACK

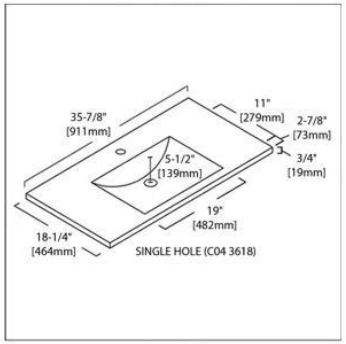

SINK

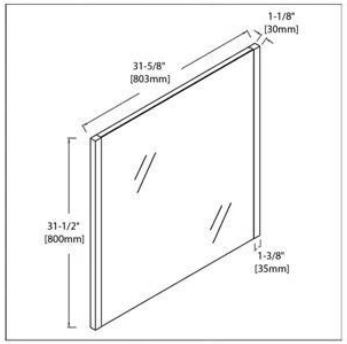

MIRROR