ASSEMBLY INSTRUCTIONS

36" BATHROOM CABINET

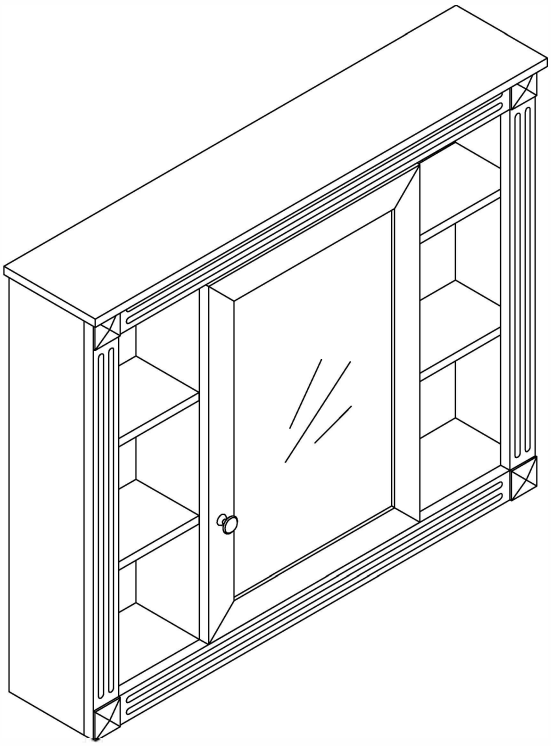

Thank you for purchasing this quality product. Be sure to check all packing material carefully for small parts which may have come loose inside the carton during shipment. Separate, identify and count all parts and hardware. Compare with the parts list to be sure all parts are present.
"DO NOT TIGHTEN SCREWS UNTIL COMPLETELY ASSEMBLED"

*** Use of power tool to assemble this product will invalidate any claim and damage this product making unsafe !!!**
*** Please assemble on a clean soft surface to avoid damage.**

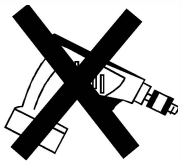

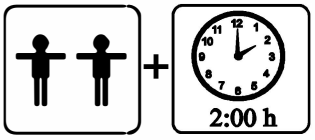

Tools Required

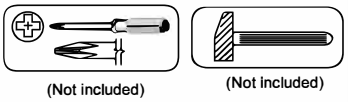

IMPORTANT:
PLEASE READ INSTRUCTION BEFORE STARTING THE ASSEMBLY

PLEASE DO NOT RETURN TO STORE

Please do not return this product to the retailer!!
We are able to assist you in ANY way

If you find that you have any trouble with assembly or missing or damaged parts please contact the seller.

Before Installation

Important – Please read these instructions fully before starting assembly

Thank you for purchasing this quality product. Be sure to check all packing materials carefully for small parts, which may have come loose inside the carton during shipment. Identify and count all items according to the PARTS LIST and/or HARDWARE LIST shown below. Check you have all the components and tools listed on the following pages.

- We recommend that you assemble this product with the assistance of another person; this will make the assembly easier, and will help eliminate damage to the product or injury to persons during assembly.
- Please do not over tighten screws or bolts until the assembly is completed.
- Keep children and animal away from the work area, small parts could choke if swallowed.
- Please put all parts on a non-abrasive floor before assembly,and follow the assembly steps to assemble your newly purchased product correctly and efficently.

Cam Lock Assembly Instructions

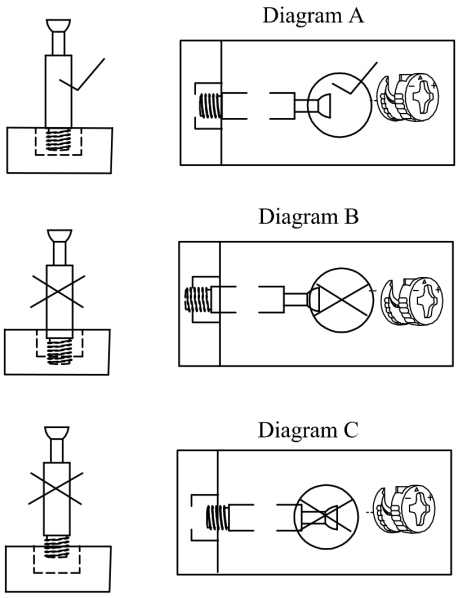

Insert Cam Bolt into hole as shown in diagram A.

Make sure not to insert the Cam Bolt:
Too deep as shown in figure B as this will cause the Cam Lock to be misaligned and unable to interlock properly.

Also avoid inserting the Cam Bolt too close to the surface of the hole as shown in figure C, as this will cause the Cam Lock to be too loose, and not interlock properly.

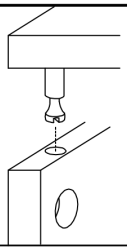

Connect the panels together.

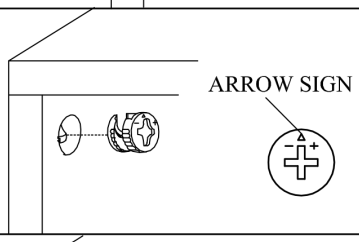

Insert the Cam Lock so the side opening fits over the head of the Cam Bolt.

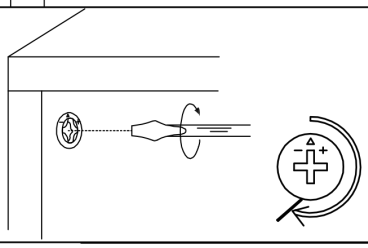

To tighten the Cam Lock, turn it clockwise on half a turn with a flat screwdriver.
**Do not use an automatic screwdriver as it may bend or break if too much power is imposed.*

Detail View - CABINET

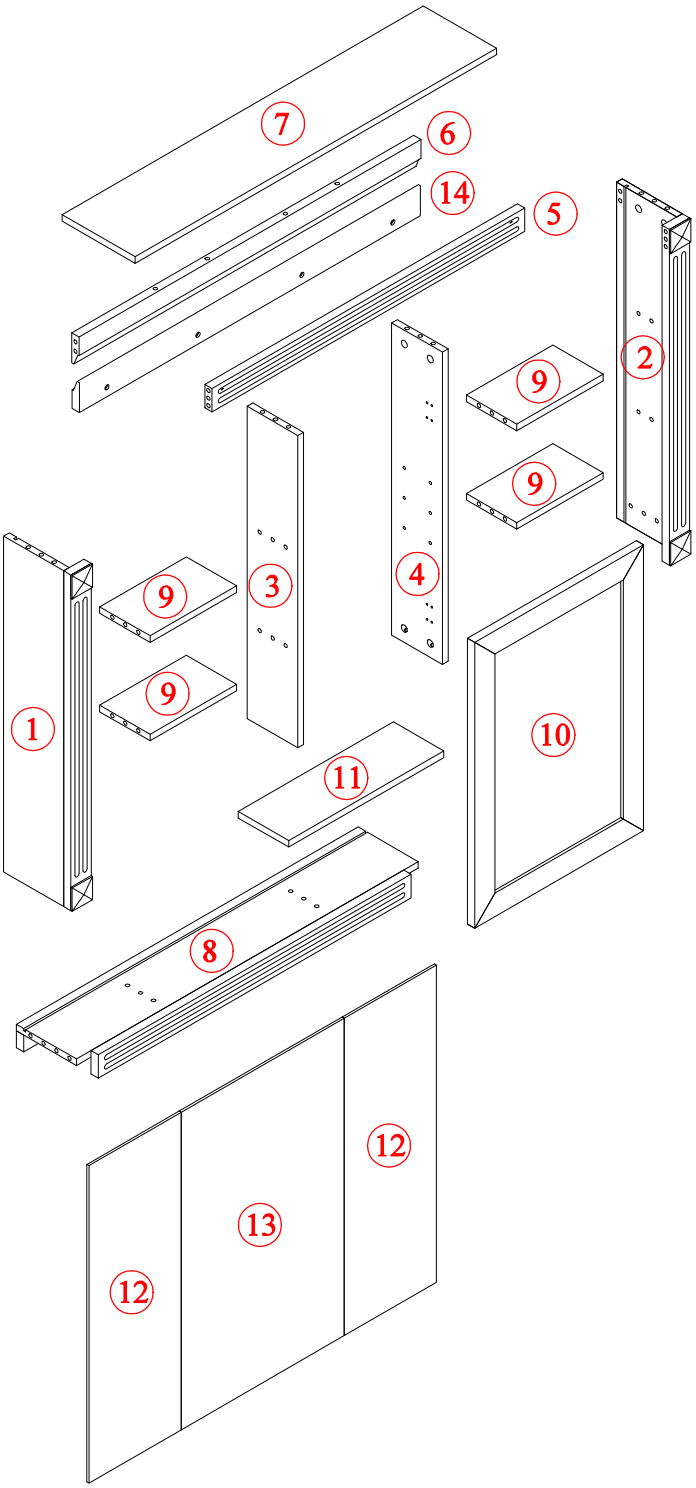

Identifying the Hardware-Identify the hardware using the illustrations below.

Part List

1 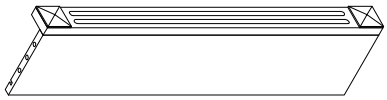 Side Panel (L) - 1pc	2 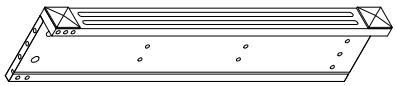 Side Panel (R) - 1pc
3 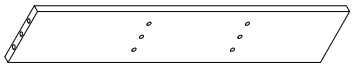 Mid Panel (L) - 1pc	4 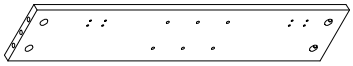 Mid Panel (R) - 1pc
5 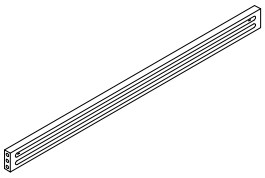 Front Bar Top - 1pc	6 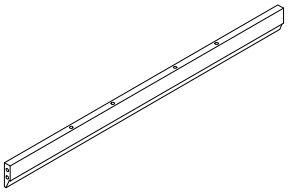 Front Bar Rear - 1pc
7 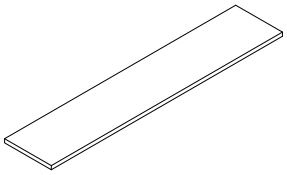 Top Panel - 1pc	8 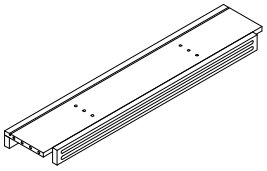 Bottom Panel - 1pc
9 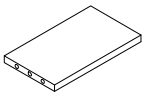 Side Panel (L-R) - 4pcs	10 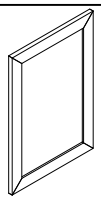 Door - 1pc
11 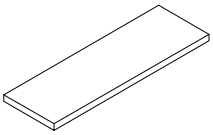 Adjustable Shelf - 1pc	12 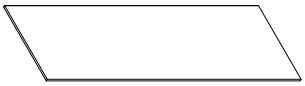 Back Panel (L-R) - 2pcs
13 Back Panel (M) - 1pc	14 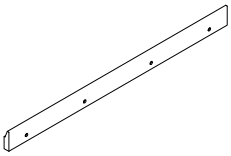 Connect Bar - 1pc

Hardware List

A ø6x35mm	B ø14.5x12mm	C ø10xø5x50mm
Three in one bolts(40pcs)	Three in one lock(40pcs)	Flat head screw - 4pcs
D ø12x55mm	E	F ø5/32"x25mm
Plastic stopper - 4pcs	Handle (1pc)	Handle screw(1pc)
G	H ø7xø3.5x15mm	I
Damping hinge (2pcs)	Flat head screw(12pcs)	Laminate pad(4pcs)
J ø8x30mm	K	
Wood dowel(30pcs)	Round head screw(4pcs)	

STEP: 1

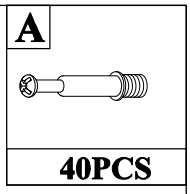

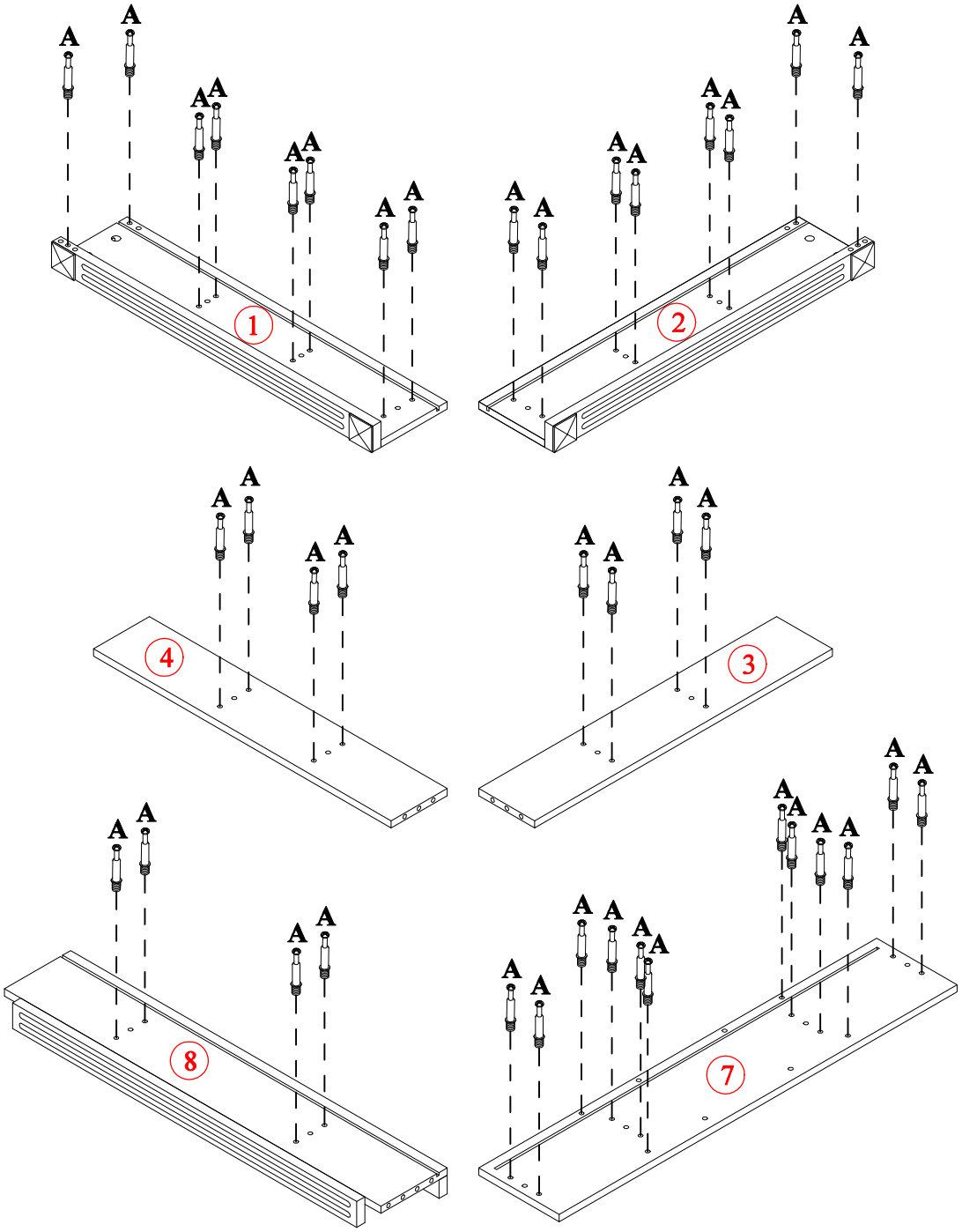

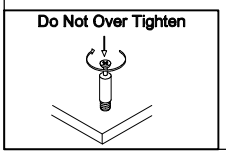

STEP: 2

B	J
8PCS	4PC

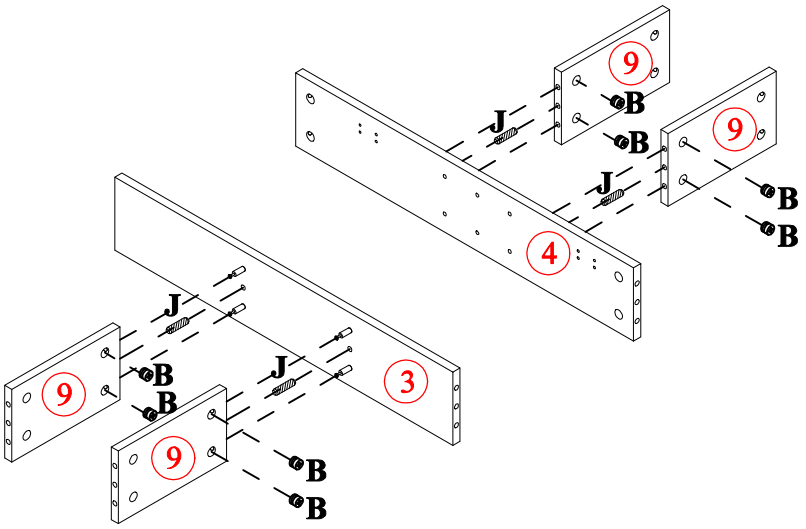

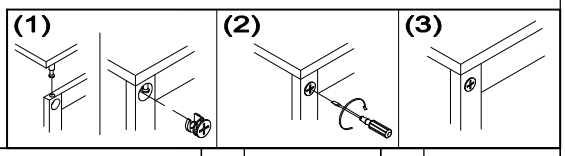

STEP: 3

B	J
4PCS	2PC

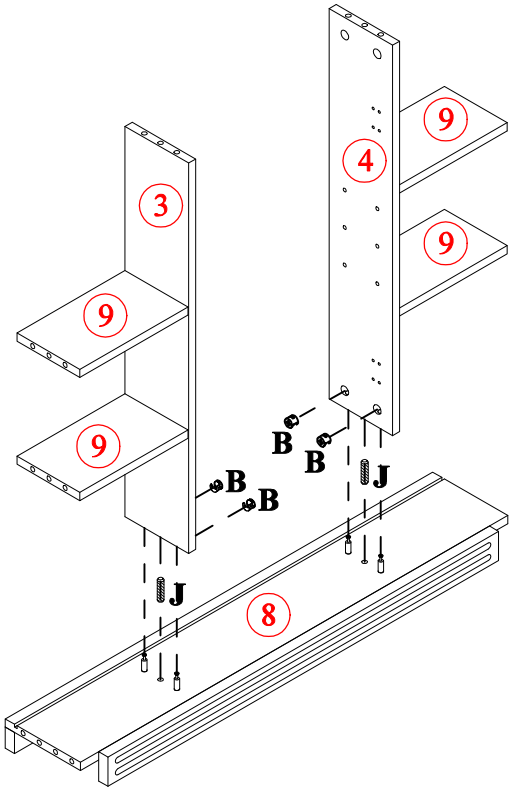

STEP: 4

B	J
	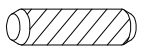
16PCS	16PC

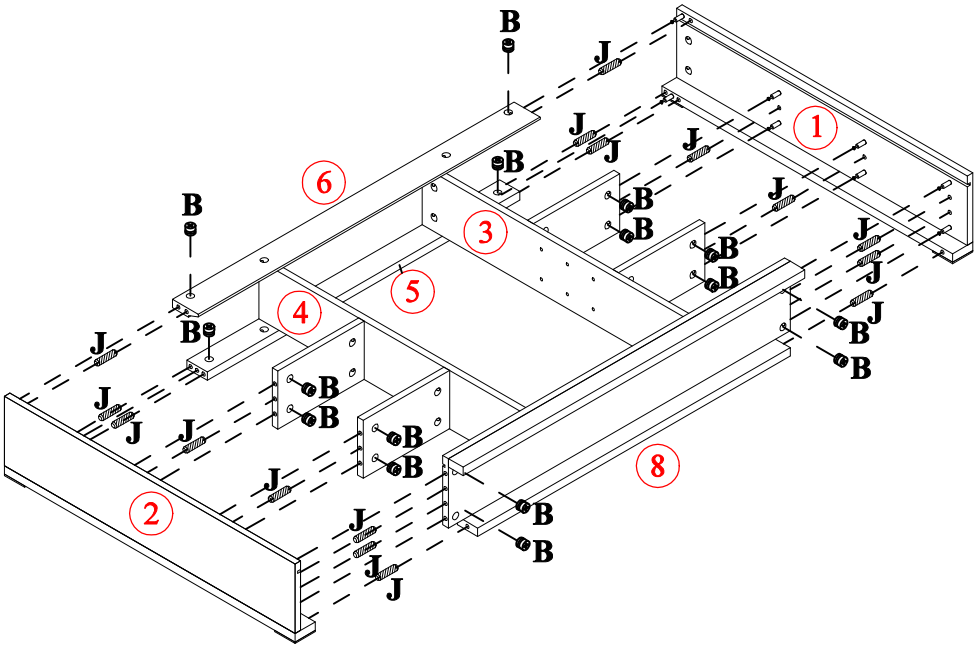

STEP: 5

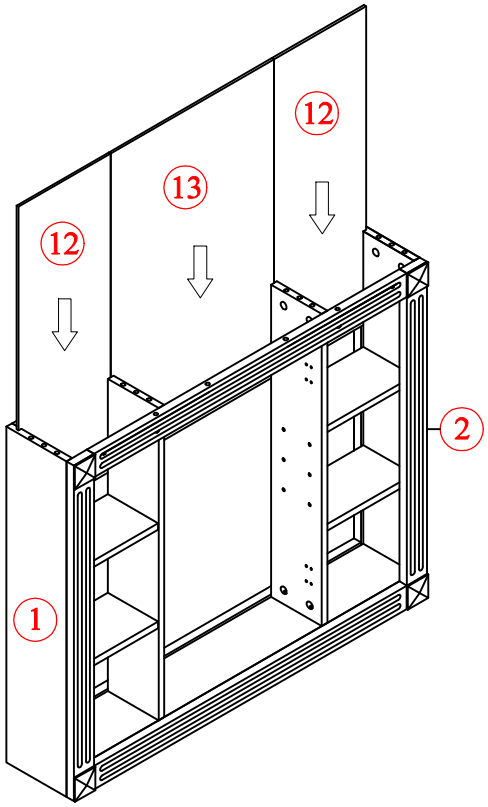

STEP: 6

B	J	K
12PCS	8PCS	4PC

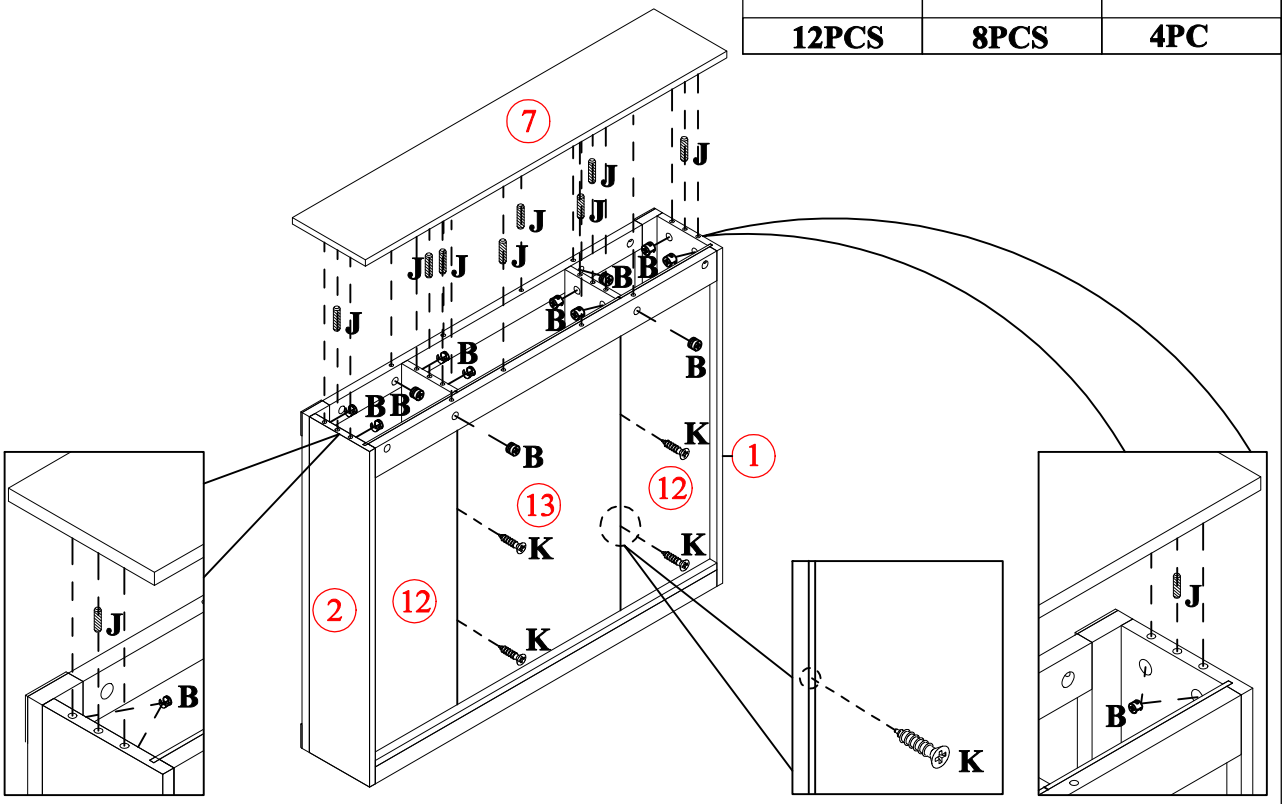

STEP: 7

G	H
2PCS	4PCS

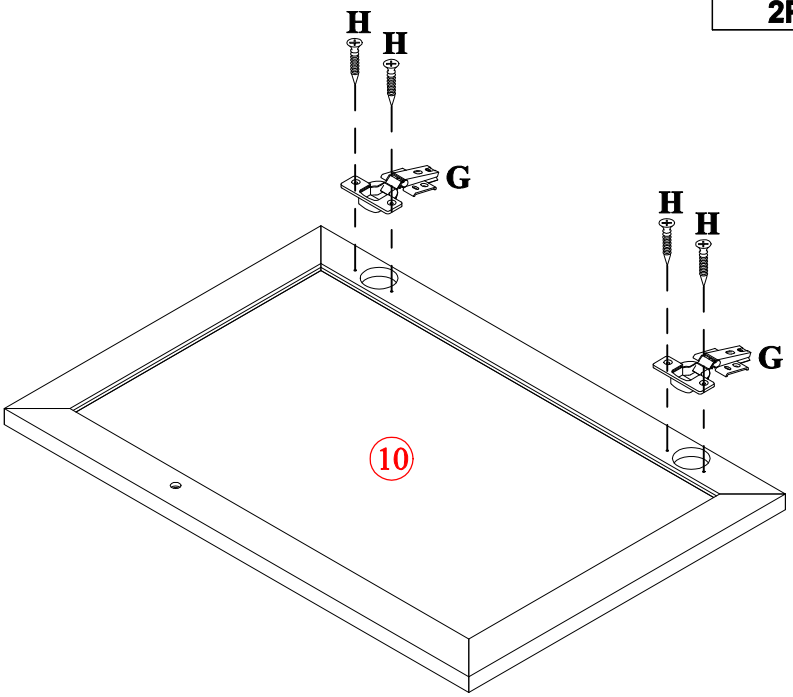

STEP: 8

E	F	H
1PC	1PC	8PCS

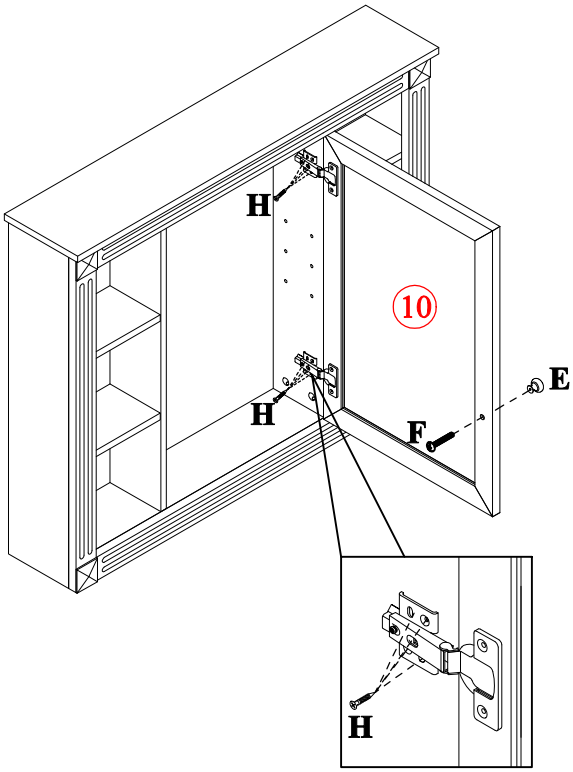

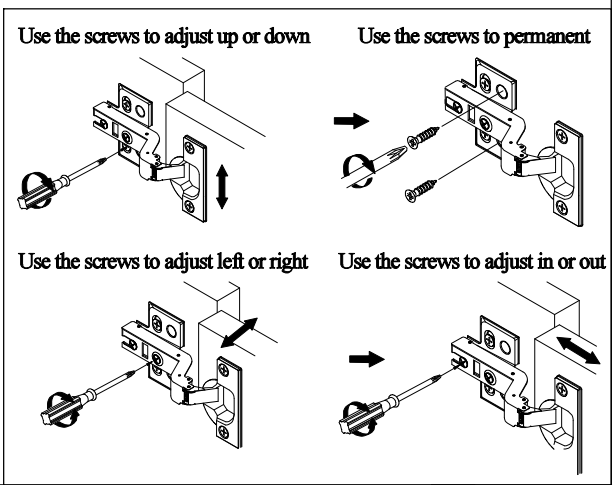

STEP: 9

I
4PCS

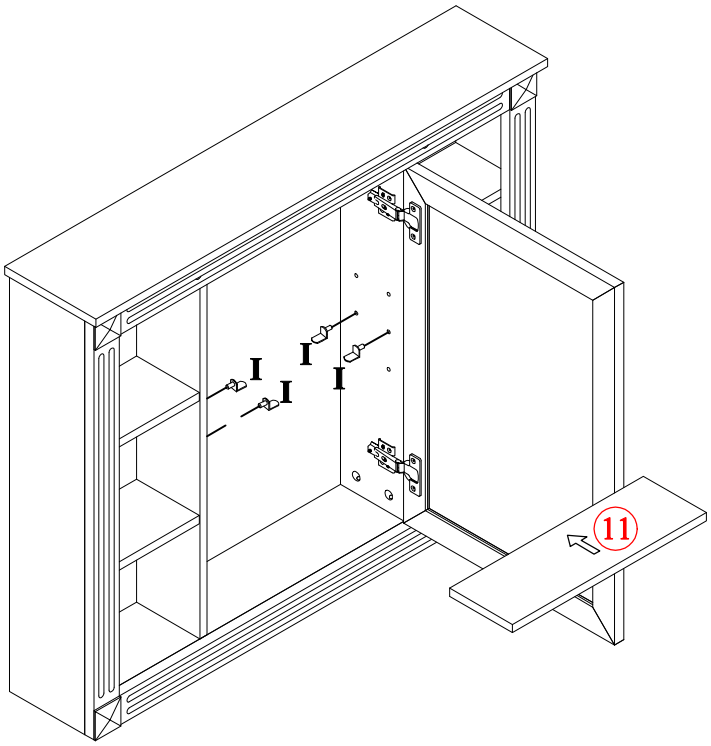

STEP: 10

C	D
4PCS	4PCS

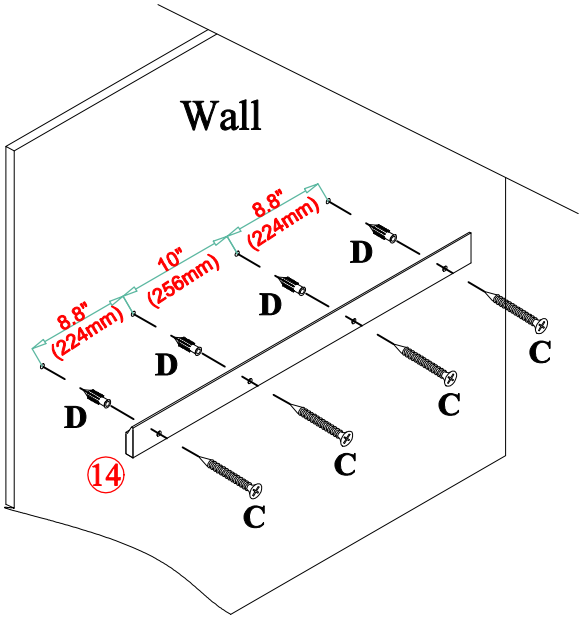

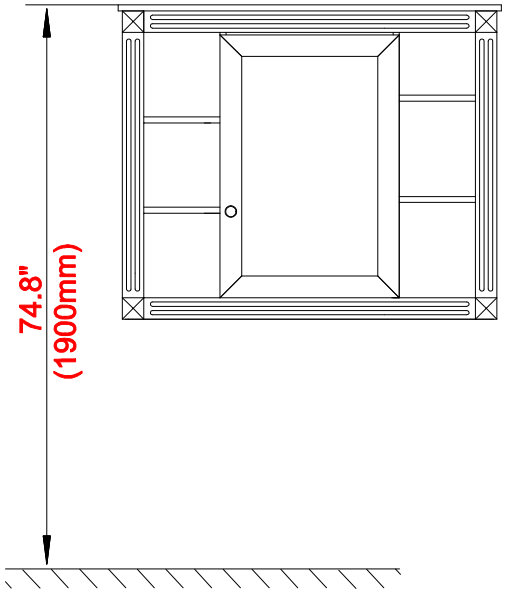

Draw the spacing between the walls and the No.14, punch holes in the wall, and fix the No.14 to the wall with screws.
Note: Appropriate distance from the top of mirror to the ground is 74.8".

STEP: 11

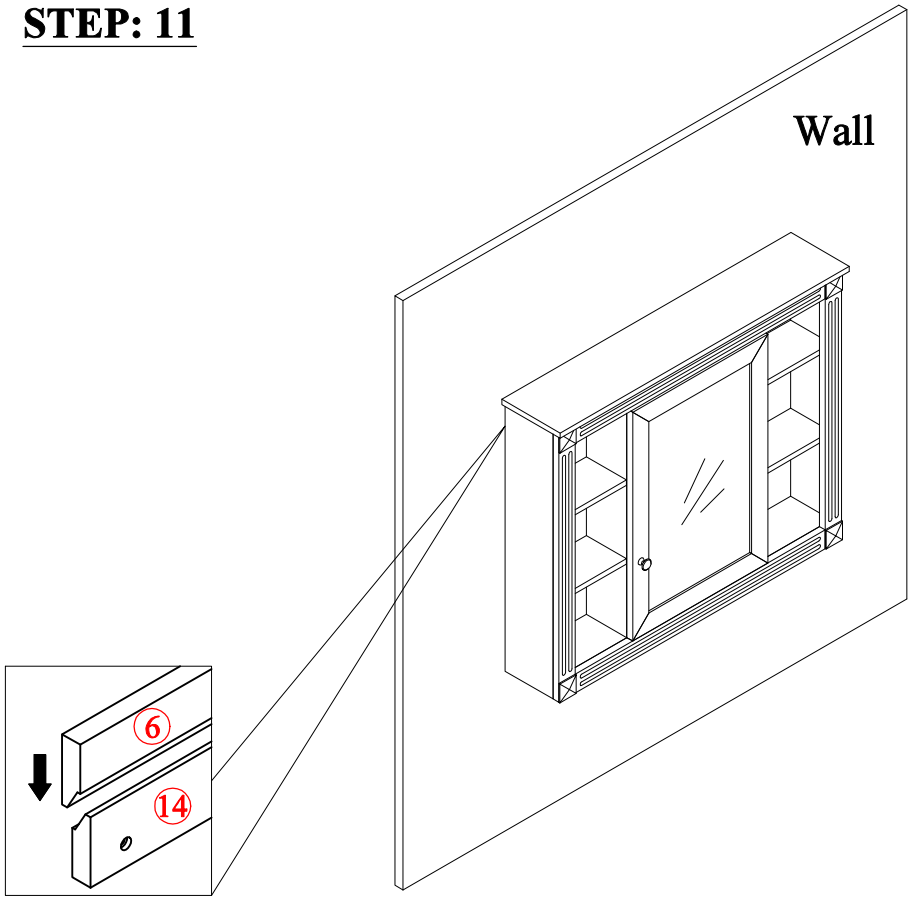

STEP: 12

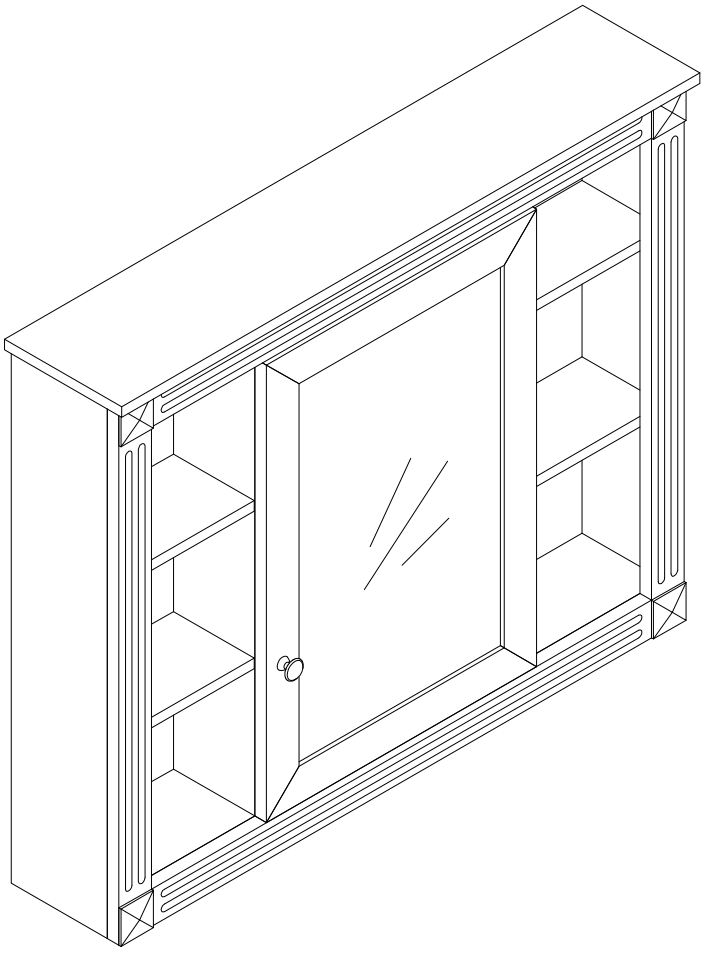

HINGE ADJUSTMENTS

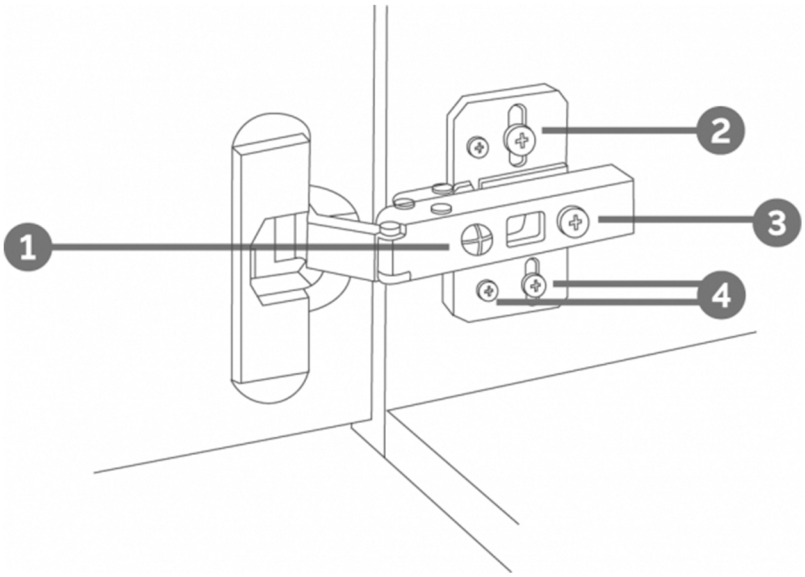

❶ Sideways / Tilt adjustment

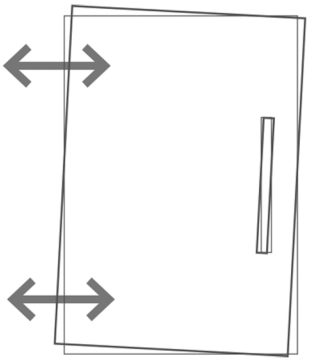

Turn the screw
clockwise to move the door further away from the side of the cabinet
anticlockwise to move the door closer to the side of the cabinet

❷ ❹ Height adjustment

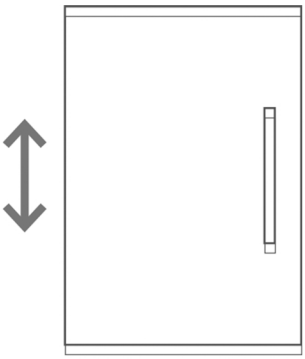

While supporting the weight of the door, turn the screws
clockwise to move the door up
anticlockwise to move the door down

❸ Forward and back adjustment

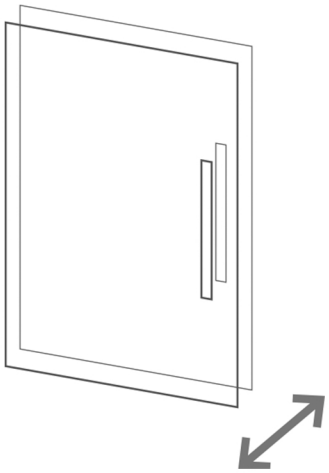

If the gap between the back of the door and the cabinet is too small, and the door may not close fully. Turn the screw
clockwise to decrease the gap between the door and the cabinet
anticlockwise to increase the gap between the door and the cabinet