Rectangular Sintered Stone Coffee Table

ASSEMBLY INSTRUCTIONS

BEFORE ASSEMBLY:

· Please read these instructions carefully before starting assembly. We suggest you carry out the assembly on a soft surface like a carpet, so as to avoid scratching the paint. Keep children away during assembly. This item contains small parts which can be swallowed by children.
· This product was made for the explicit purpose of providing outdoor function and is not to be used as a toy. This product is for residential use only. This product is NOT intended for commercial use; unintended use will void the warranty.
· This product is not intended for use during inclement or severe weather, that includes but is not limited to rain, hail, sleet, snow, wind, freezing conditions and extreme heat.
· Please note because of the nature of cast metal, you may find roughness on the surface which enhances the beauty of the product and is not a defect.
· Aluminum is soft metal, please do not use power tools, and over tighten may strip threads or break the parts.
· When not in use, store and/or cover the product in a cool dry location. Do not locate the product near any sort of high heat. Do not use the product as a support.
· Children under the age of 10, who are near the product, should be supervised by a competent adult at all times.
· Do not discard any of packaging until you finish the assembly. Keep the assembly instructions for future reference or warranty.
· **Minor product improvements may be made without prior notice.**

PARTS LIST:
Place all the parts on a clean and soft surface, identify all the parts and hardware kits against parts list.

AX2 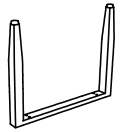 **Chair Leg**	**BX1** 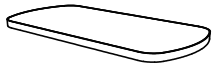 **Table Top**	**CX8** **Washer**
DX8 **Spring Washer**	**EX8** 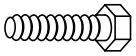 **Bolt(M6*35)**	**FX8** **Bolt Cap**
GX1 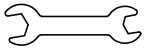 **Wrench**		

Step 1: Place all the parts on a clean and soft surface, identify all the parts and hardware kits against parts list. Turn over the Table Top(B). Assemble Leg(A) and Table Top(B) with hardware(C,D,E) in the order displayed in Fig(1). Then assembl -e the other Leg(A). Ensure all components are preliminarily fastened with Bolts(E) before proceeding to fully tighten them. After fully tightening, put Bolt Caps(F) over all Bolts.

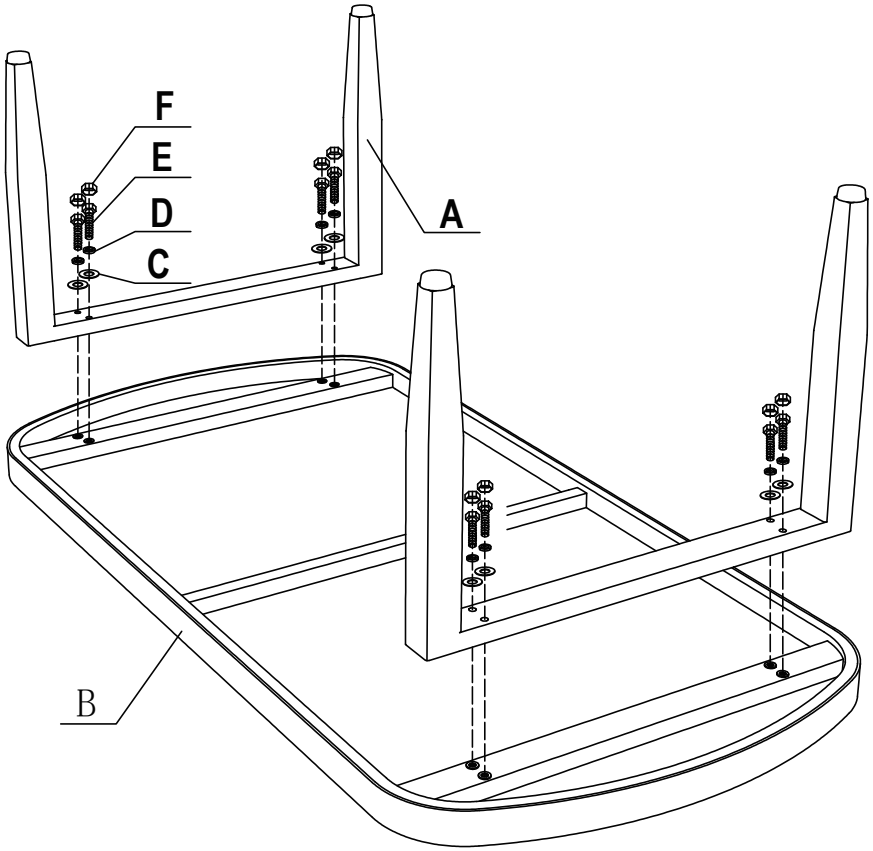

(1)

Step 2: Turn over again and check that all the parts are securely connected. Adjust the levelers till the table is stable. Now your table is ready to use.

(2)