Underscore®

VibrAcoustic® Bubblemassage™ Bath

K-1168-GVB

Features

- Six transducers and a control amplifier with 25’ (7.6 m) of wiring.
- User-friendly high-resolution color touch screen (in polished chrome).
- 122 BubbleMassage™ airjets.
- With Zones of Control™ feature.
- Blower motor with 300 W heater.
- Slotted overflow for maximum bathing depth.
- Molded lumbar support for comfort.
- Reversible drain.
- 60 " (1524 mm) x 32 " (813 mm) x 21 " (533 mm)

Material

- Acrylic.

Installation

- Drop-in or under-mount installation.

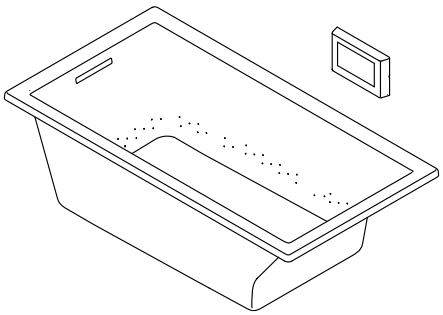

Codes/Standards

ASME A112.19.7/CSA B45.10
CSA B45.5/IAPMO Z124
ASTM E162
ASTM E662
UL 1795

KOHLER® One-Year Limited Warranty KOHLER® Electronic Faucets, Valves, and Controls - Five-Year Limited Warranty

See website for detailed warranty information.

Available Color/Finishes

Color tiles intended for reference only.

Color	Code	Description
	0	White
	96	Biscuit
	47	Almond
	NY	Dune
	95	Ice™ Grey
	G9	Sandbar
	33	Mexican Sand™
	K4	Cashmere
	58	Thunder™ Grey
	7	Black Black™

Underscore®

VibrAcoustic® Bubblemassage™ Bath

K-1168-GVB

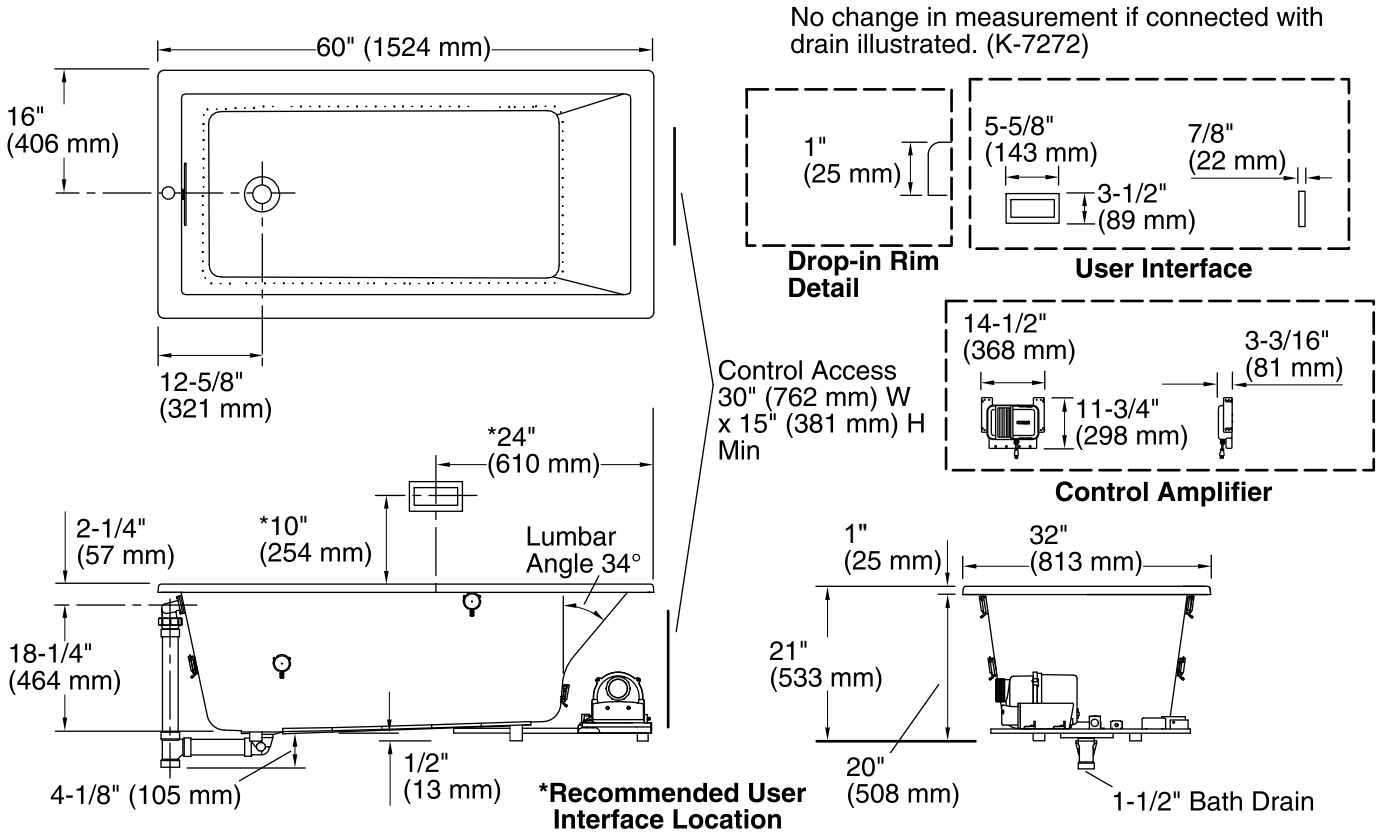

Required Electrical Service

One dedicated circuit required, protected with Class A Ground-Fault Circuit-Interrupter (GFCI) or Residual Current Device (RCD).

Blower, Amplifier, Heater:	120 V, 15 A, 60 Hz

Technical Information

All product dimensions are nominal.

Installation:	Drop-in/Undermount
Drain location:	Reversible
Basin area, bottom:	42" x 23-1/2" (1067 mm x 597 mm)
Basin area, top:	55-1/8" x 27-1/8" (1400 mm x 689 mm)
Weight:	110 lbs (49.9 kg)
Minimum floor load:	58.6 lbs/ft² (286.1 kg/m²)
Water depth:	17-1/8" (435 mm)
Water capacity:	81 gal (306.6 L)
Cutout:	Drop-in, 59-1/2" x 31-1/2" (1511 mm x 800 mm)
Under-mount kit:	K-590

Notes

Install this product according to the installation guide. Ensure that the bath, user interface, amplifier, and transducers are functional before completing the installation.

Control amplifier fits 16" (406 mm) center studs. 25' (7.6 m) cables are included.

Locate the bath within 24" (610 mm) of a GFCI-protected 120 V, 15 A grounded electrical outlet. A second grounded outlet within the wall framing must be within 24" (610 mm) of the planned control amplifier. One electrical service may be used for the entire bath and related electrical components.

Hot water supply should be 70% of capacity or greater. Installations will vary.