Cabinet

Product ID. Q5XSM

Scan for Support
support@garvee.com

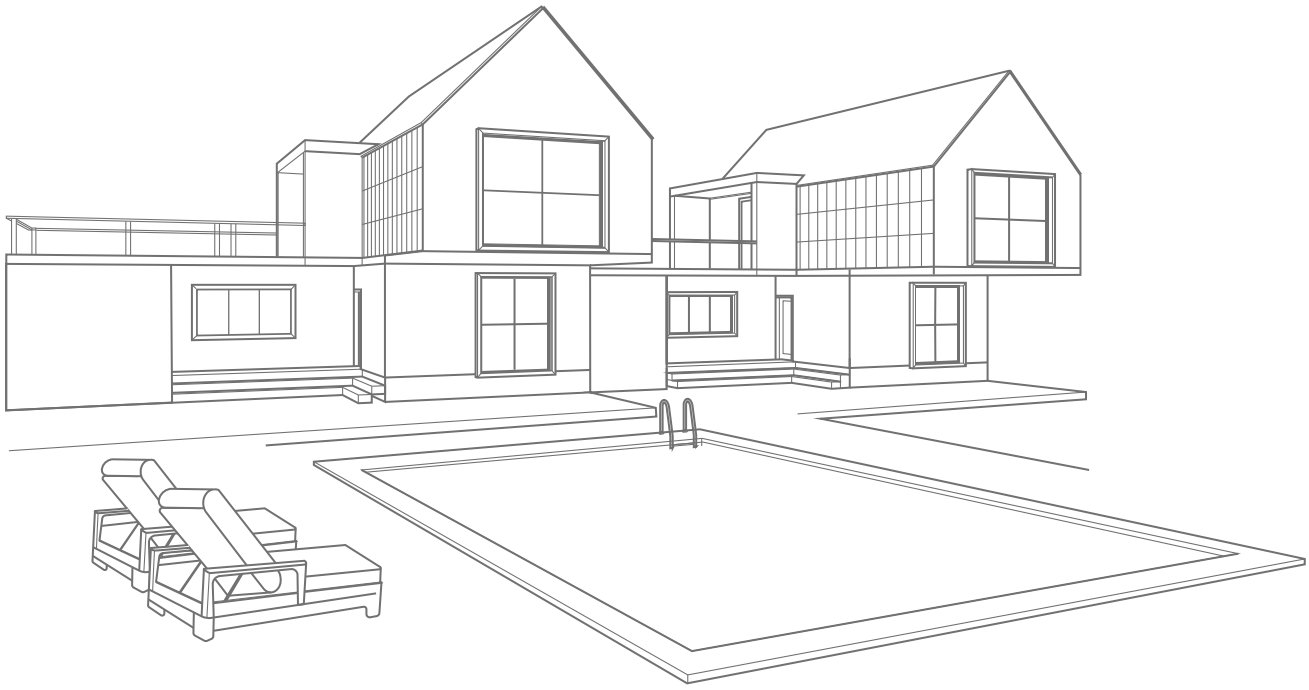

Distributed by
GARVEE.com

V260508ZFB5

SKU:PHK_3AFWFLEX/PHK_3AFW5SSK

Assembly Instruction

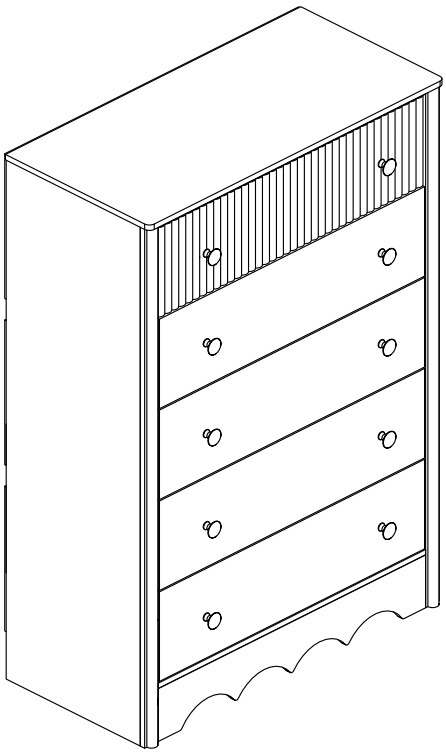

Team
Assembly
Recommended

Trouble shooting:

Missing /Wrong/Broken parts and installation issues

↓

Send email with your question pic, order NO. and screenshot of order details to:
Support @ garvee.com

↓

Respond within 24 hours

↓

Issue resolved

WARNING





Children have died from furniture tipover.
To reduce the risk of furniture tipover:

- ALWAYS install tipover restraint provided.
- NEVER put a TV on this product.
- NEVER allow children to stand,climb or hang on drawers,doors, or shelves.
- NEVER open more than one drawer at a time.
- Place heaviest items in the lowest drawers.

Tips!

1.Check all the components & screws are intact before assembling .
2.If you notice any pieces are missing or damaged please do not assemble and contact us immediately .
3.**Please send an email with you order number and issues,we will respond within 24 hours.**

Tools required

A Phillips head screw driver is required for the assembly of this product. (not included)
Electric tool should not be used to assemble this product.

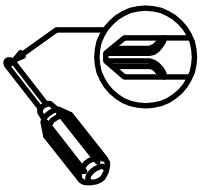

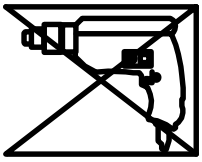

Two people are needed



IMPORTANT SAFETY INFORMATION

- Please carefully read the following instructions and caution warnings before assembling the product.
- Following this guide will ensure that you install, use and maintain the product properly.
- Please keep this installation and user manual/instructions for future reference in case you need to disassemble the product.
- Never allow children to climb onto the product. Ensure that you have special safety measures when children are around on their own.
- Be sure to check that all parts of the product are intact after you open the package.
- Do not assemble if you notice serious damage such as cracks or bends.
- During installation, please use work gloves for hand safety.
- Please assemble the unit on carpeted floor or the flat cardboard box to avoid scratching the surface or your floor while assembling on the floor.
- To assemble, please use the complimentary installation tools (Phillips screwdriver). Pay more attention to the direction of components at each steps.
- It is recommended that two people work together to assemble the product.

RETURN POLICY

- Ensure the product is in a good condition with the original box and all original certificates of purchase, manuals, and accessories attached.

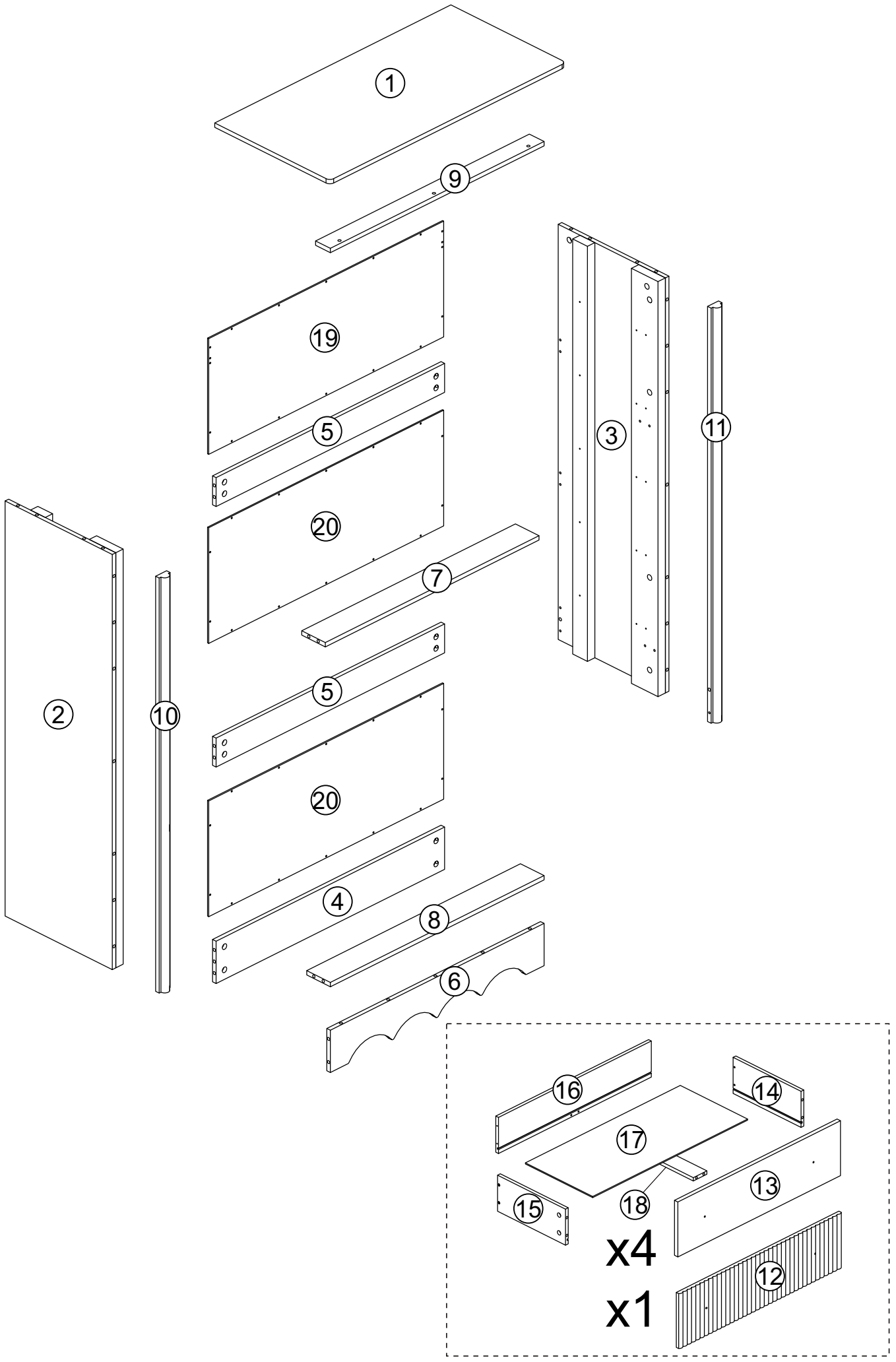
1
9
19
5
20
7
5
20
4
8
6
2
10
3
11
16
14
17
13
15
18
x4
12
x1

Components▼

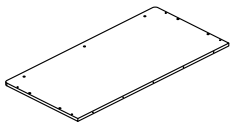 ① x1

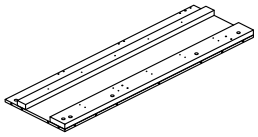 ② x1

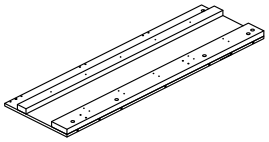 ③ x1

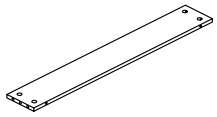 ④ x1

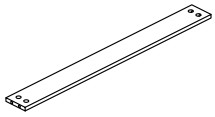 ⑤ x2

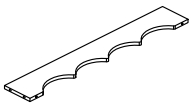 ⑥ x1

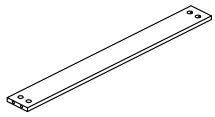 ⑦ x1

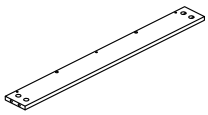 ⑧ x1

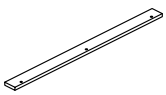 ⑨ x1

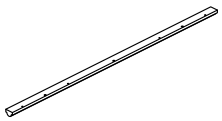 ⑩ x1

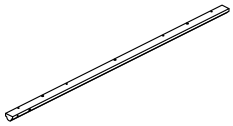 ⑪ x1

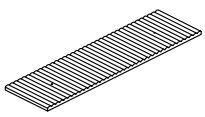 ⑫ x1

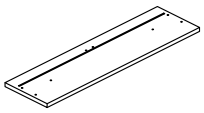 ⑬ x4

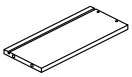 ⑭ x5

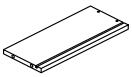 ⑮ x5

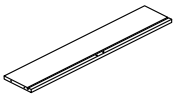 ⑯ x5

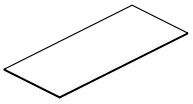 ⑰ x5

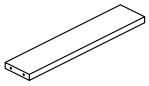 ⑱ x5

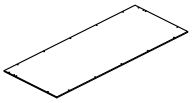 ⑲ x1

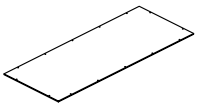 ⑳ x2

Screws & Tools▼

A	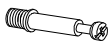	Ø6x35mm	x67
B		Ø15x10mm	x67
C		Ø8x30mm	x16
D		M4x35mm	x30
E		Ø3.5x14mm	x64
F		M3.5x22mm	x10
G		Ø3.5x14mm	x42
H		M6x16mm	x3
I			x10
J			x4
K			x2
L			x4
M		M4x50mm	x4
N	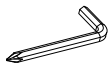	M4	x1
CL			x5
CR			x5
DL			x5
DR			x5

Check all the components &screws before assembly

Do not install in case part is missing, contact us to get.

Send email with your question to Support @garvee.com

We will resend with in 24 hours

Step 1

E	Ø3.5x14mm	15pcs
CL	300mm	5pcs

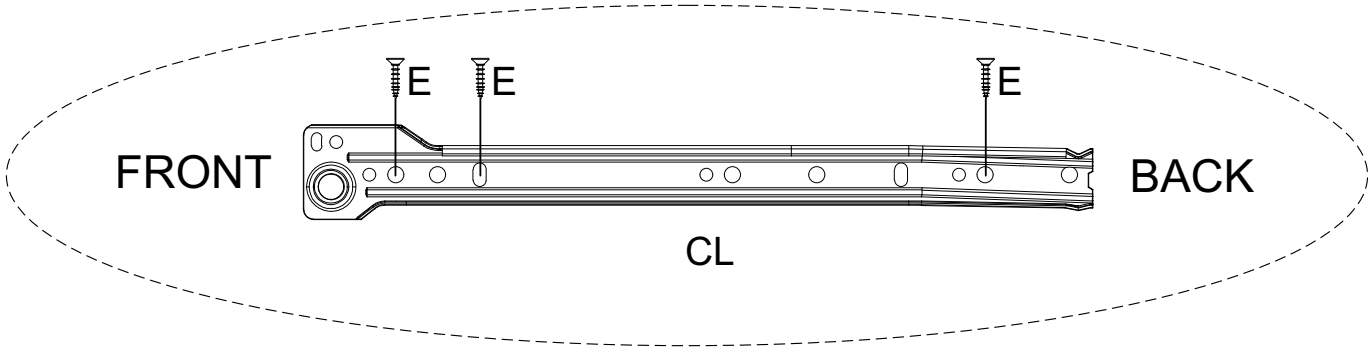

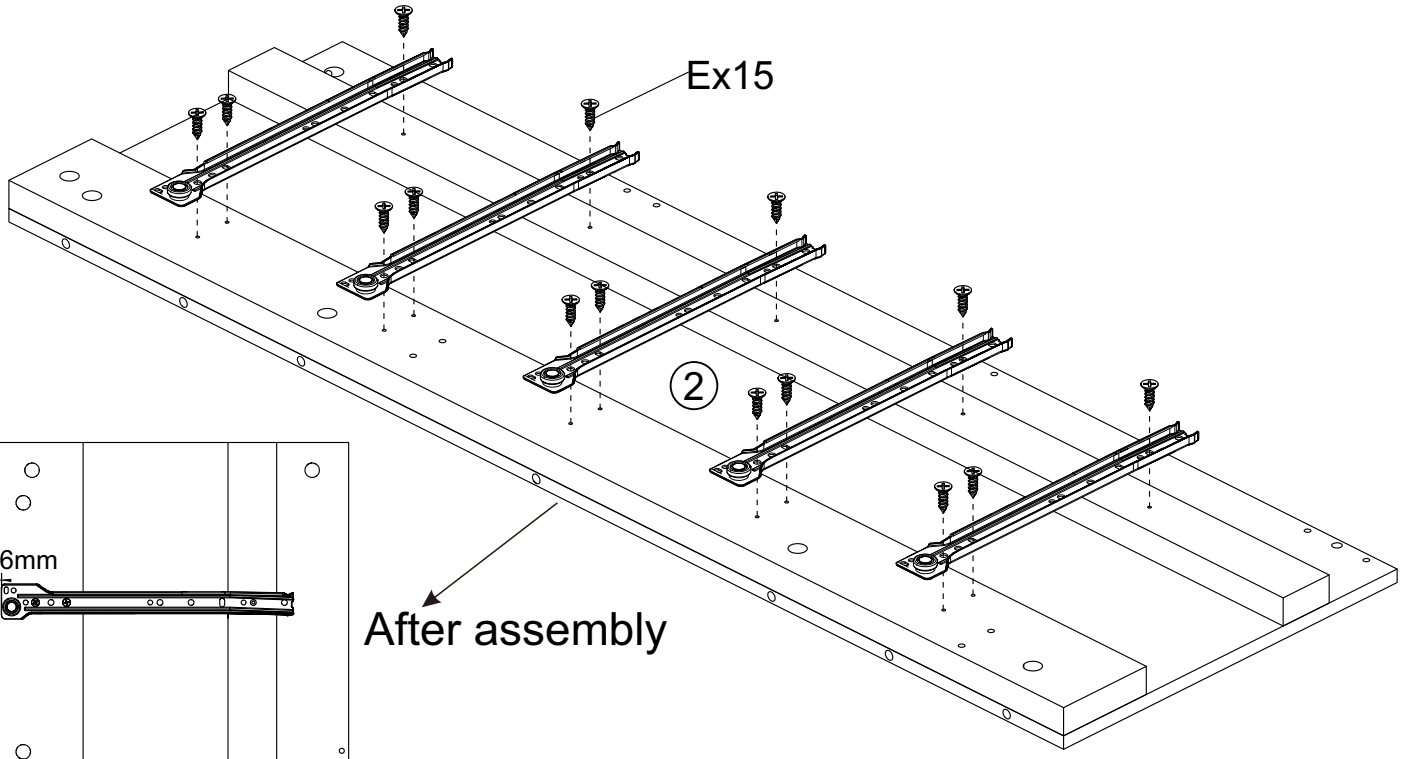

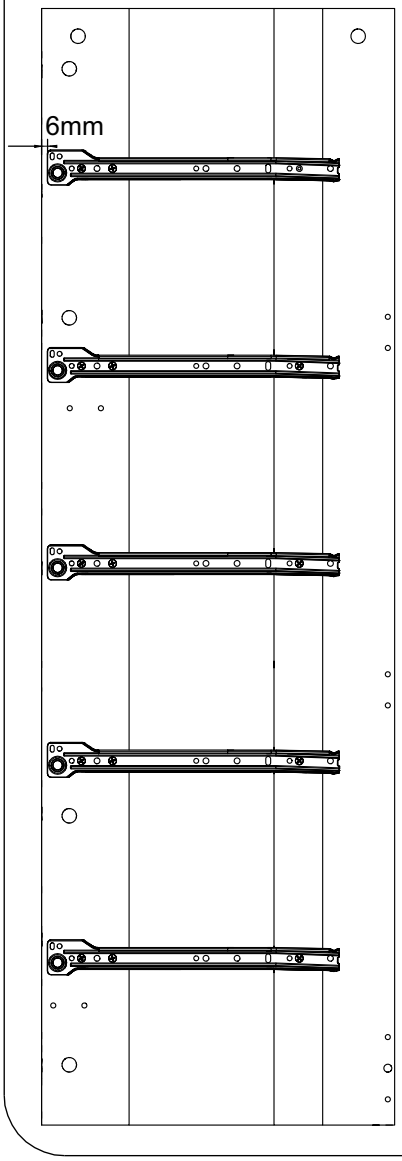

Noted the dictance of glide to edge is 6mm

Step 2

E	Ø3.5x14mm	15pcs
CR	300mm	5pcs

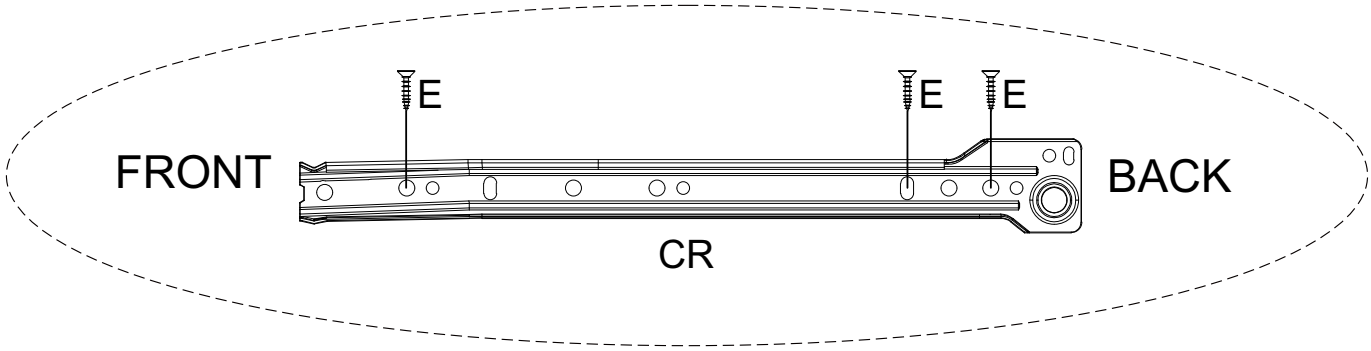

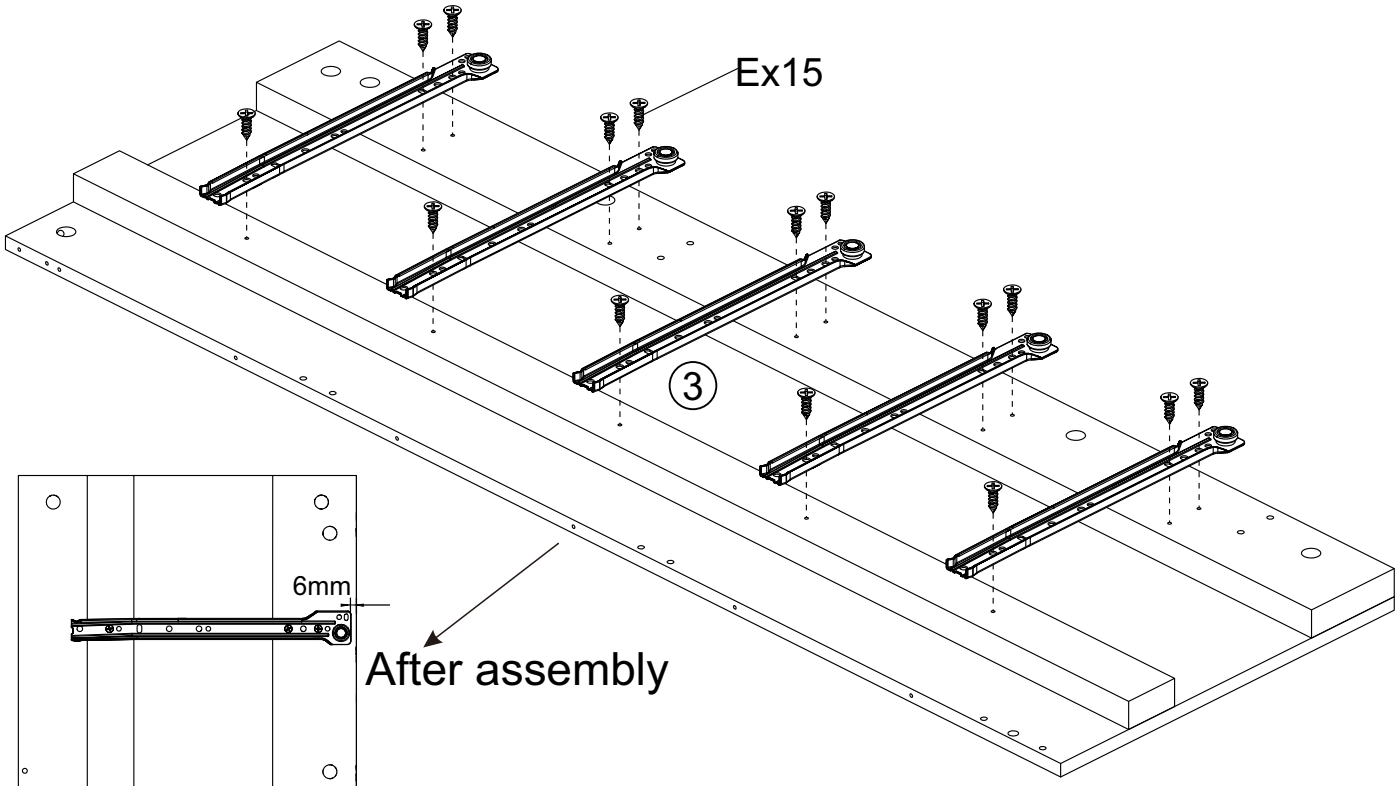

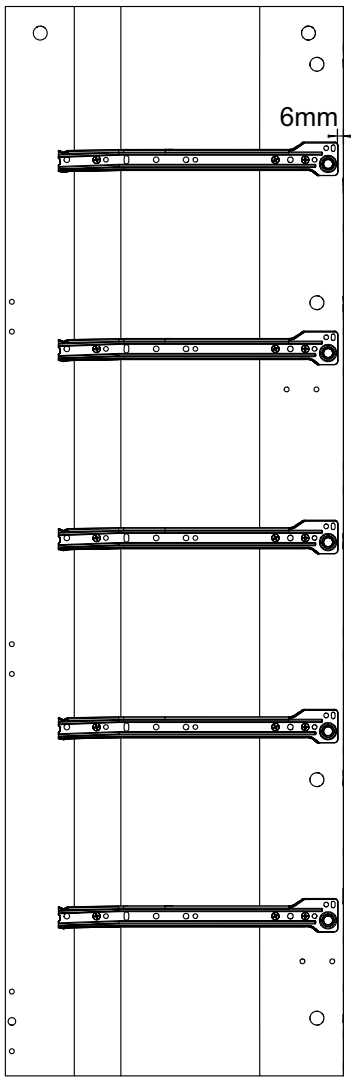

Noted the dictance of glide to edge is 6mm

Step 3

A	Ø6x35mm	4pcs
B	Ø15x10mm	4pcs
C	Ø8x30mm	3pcs

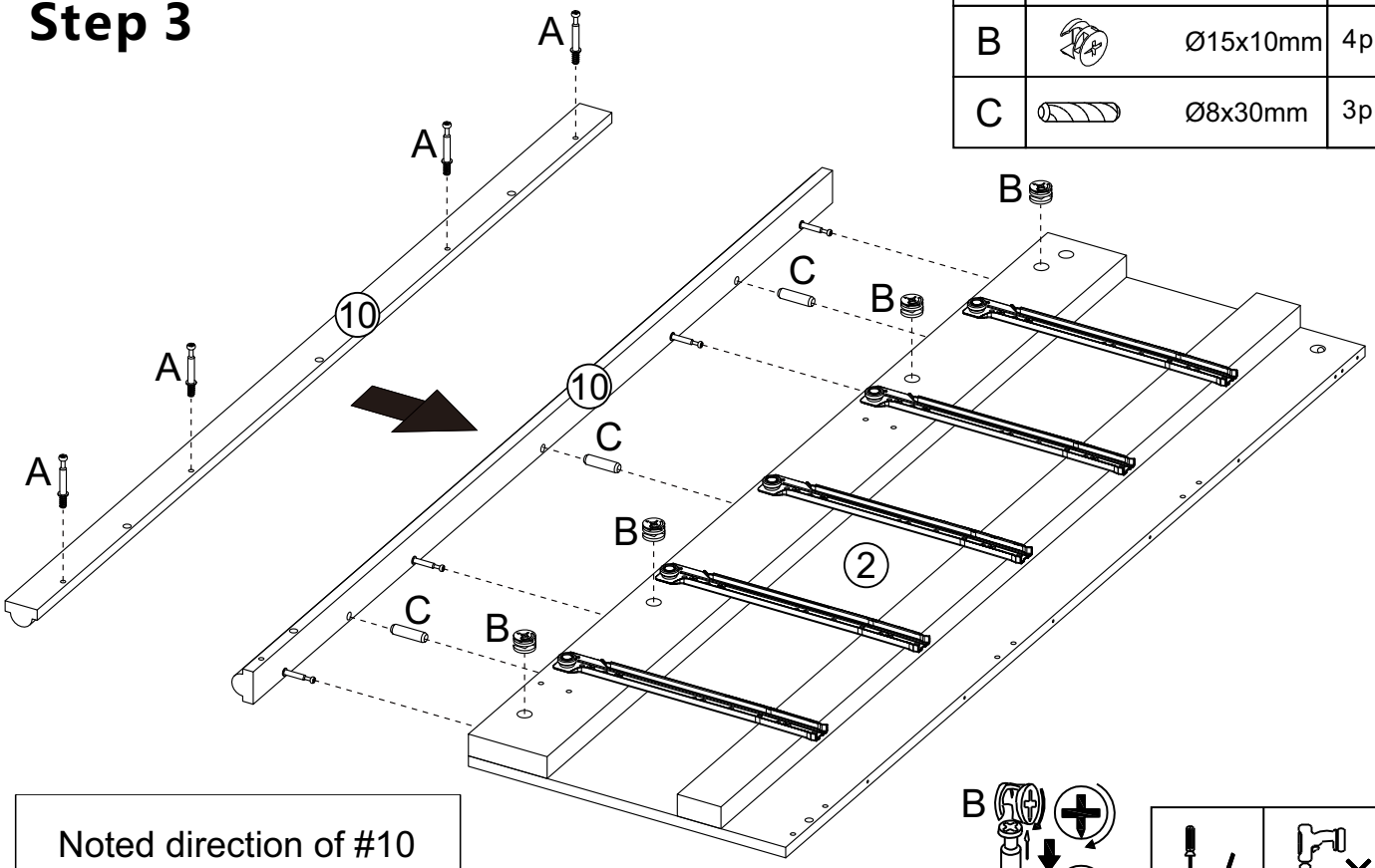

Noted direction of #10

Step 4

A	Ø6x35mm	4pcs
B	Ø15x10mm	4pcs
C	Ø8x30mm	3pcs

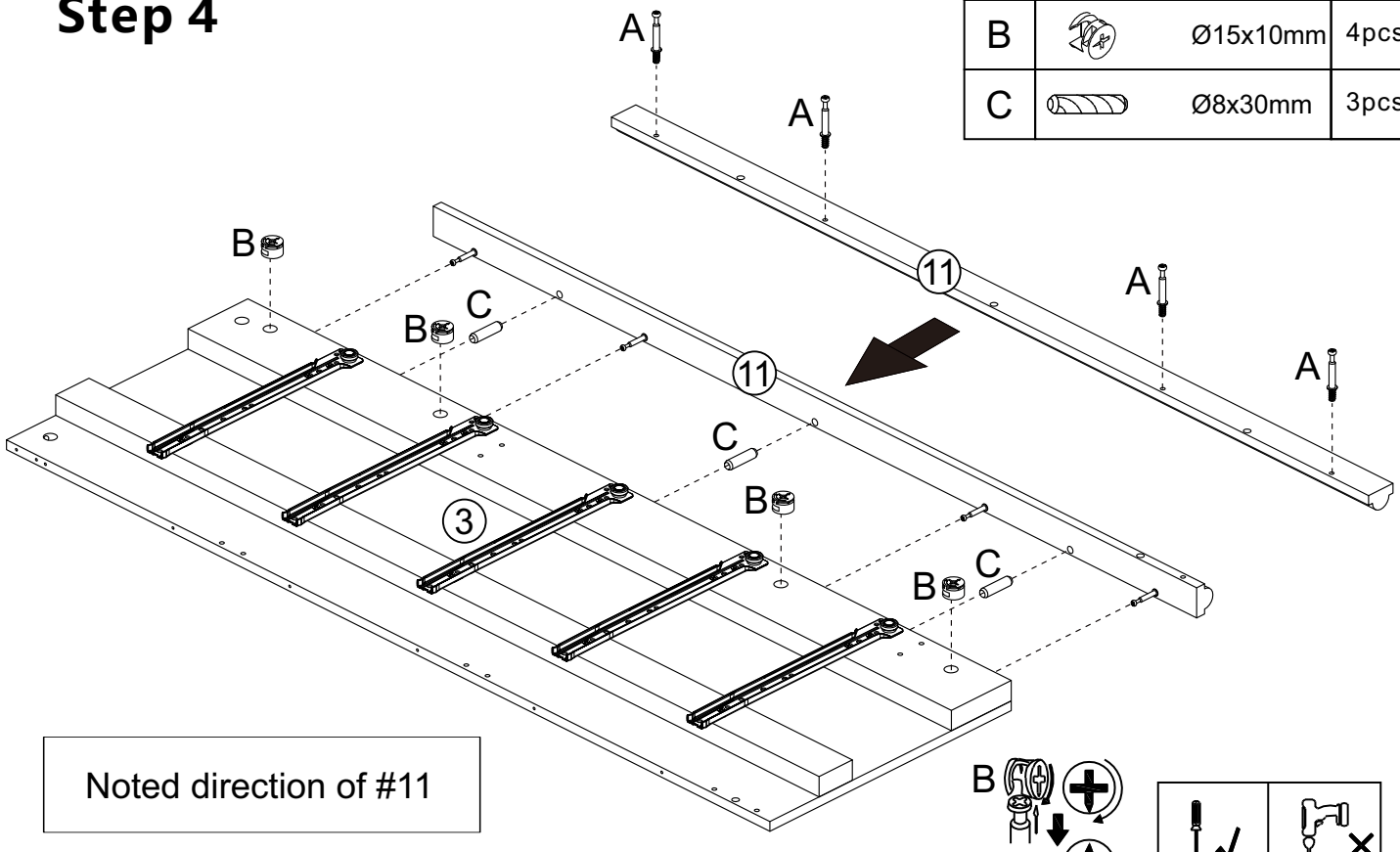

Noted direction of #11

A	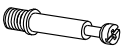	Ø6x35mm	22pcs

Step 5

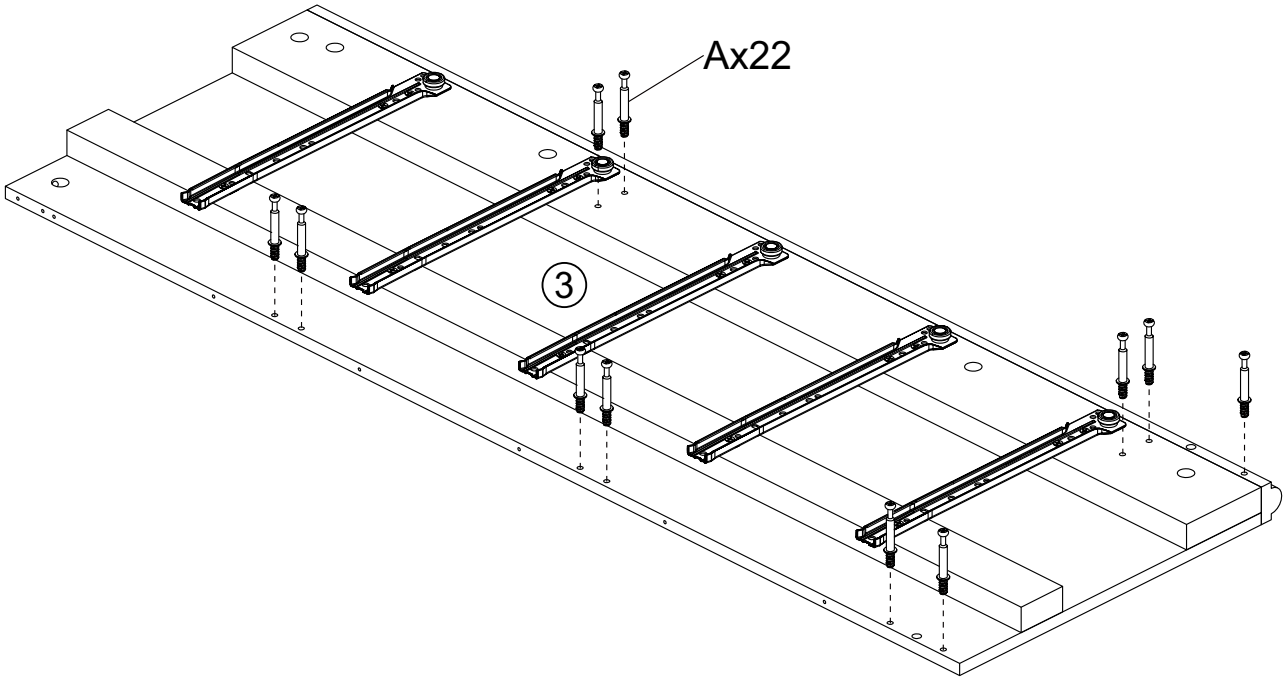

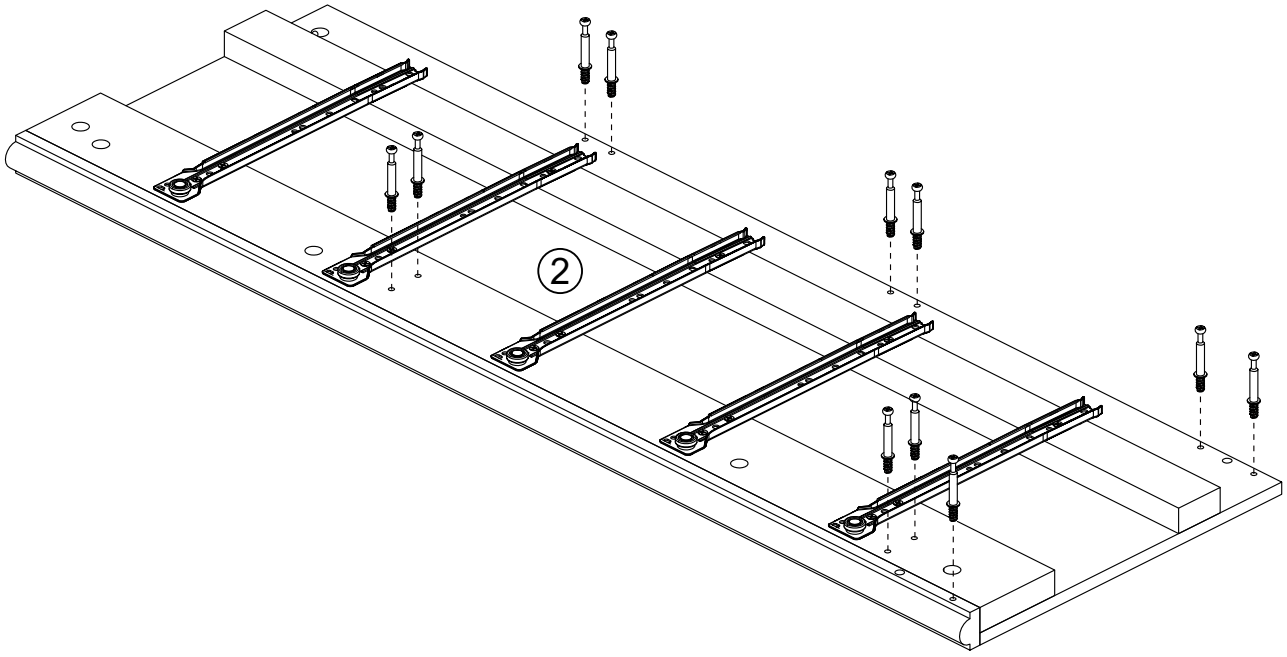

Step 6

A	Ø6x35mm	3pcs
B	Ø15x10mm	3pcs
C	Ø8x30mm	2pcs

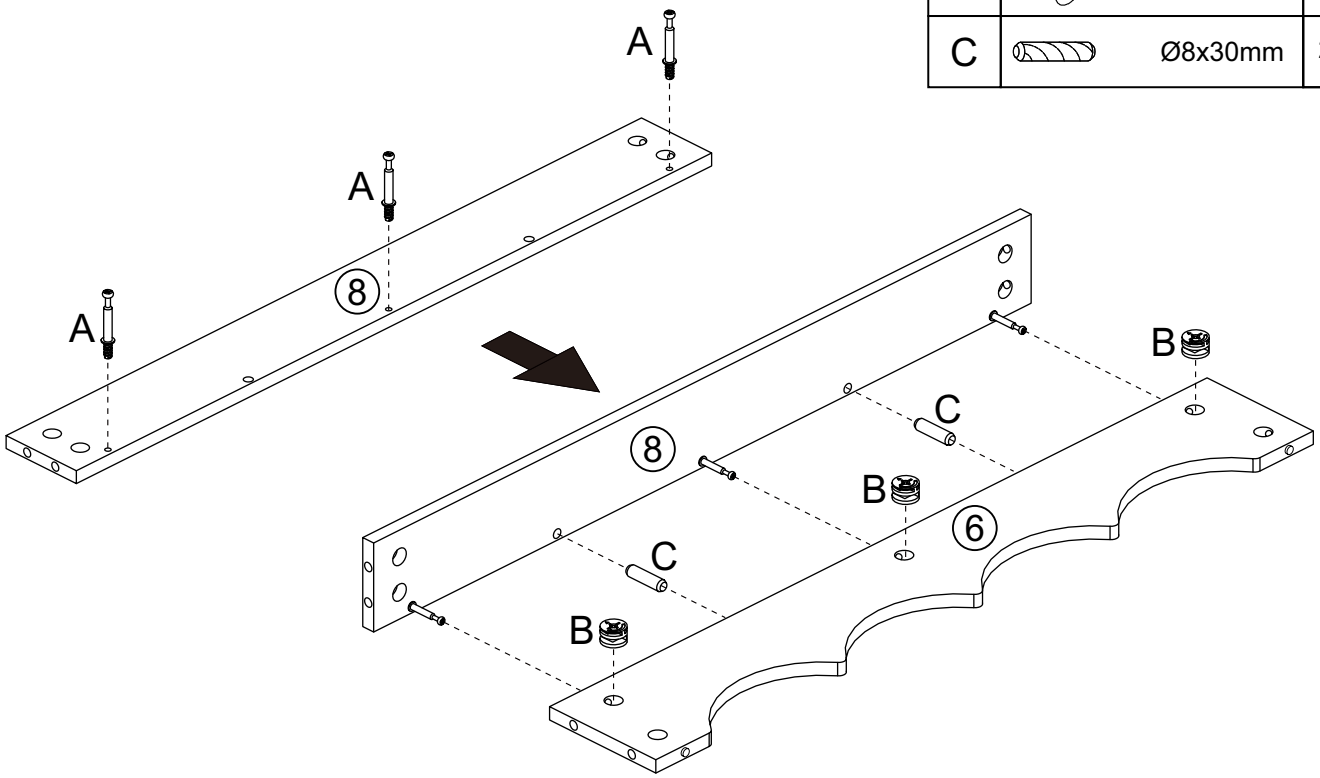

Step 7

B	Ø15x10mm	6pcs
C	Ø8x30mm	1pc

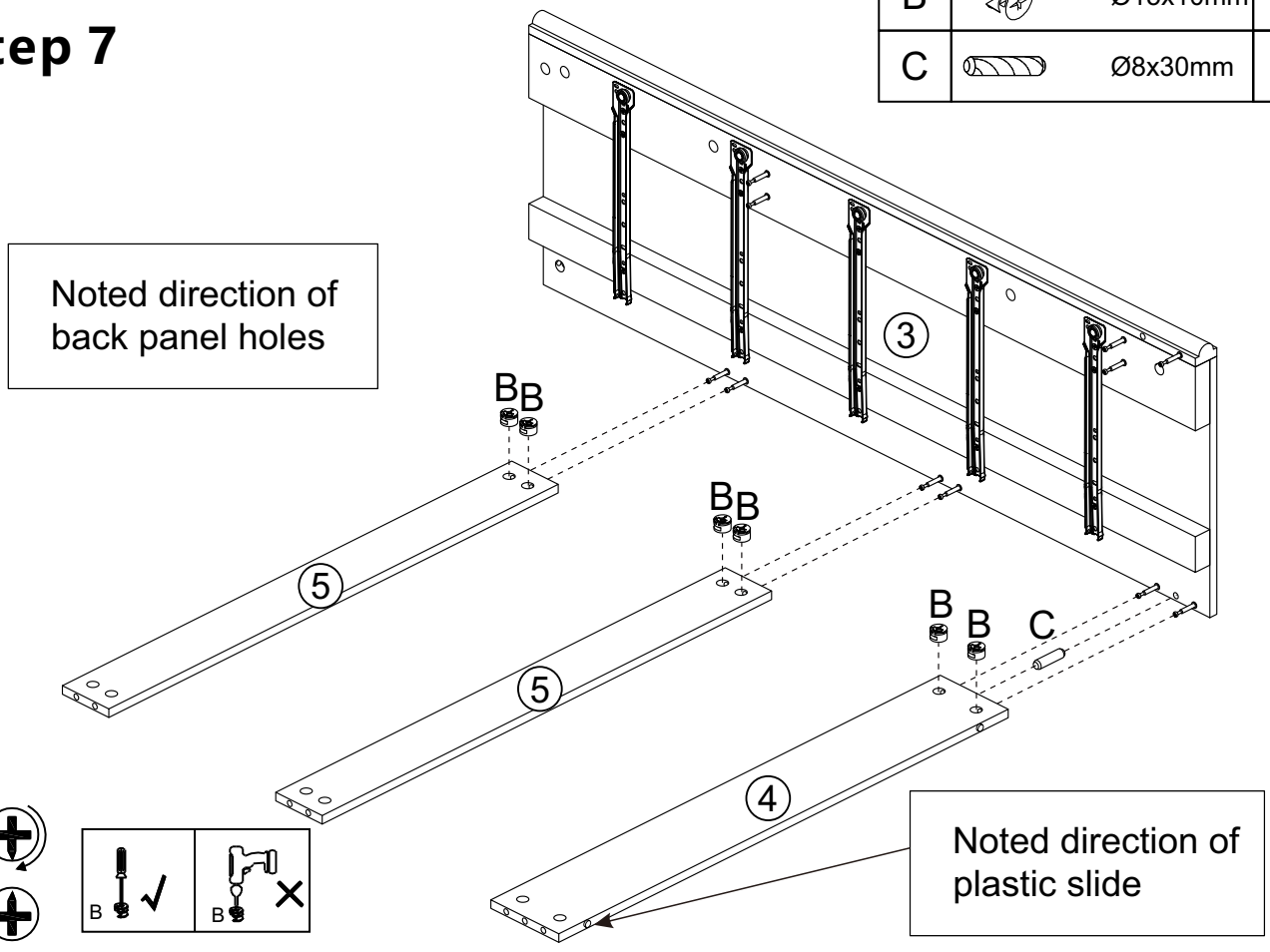

Step 8

B		Ø15x10mm	5pcs
C		Ø8x30mm	1pc

Hold the 6# and 7# and 8# board with your hand

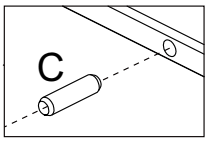

Noted direction of back panel holes

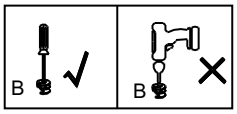

Step 9

B		Ø15x10mm	11pcs
C		Ø8x30mm	2pcs

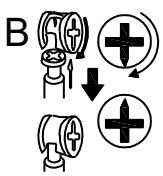

Step 10

A	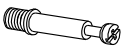	Ø6x35mm	4pcs
H		M6x16mm	3pcs
N	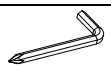	M4	1pc

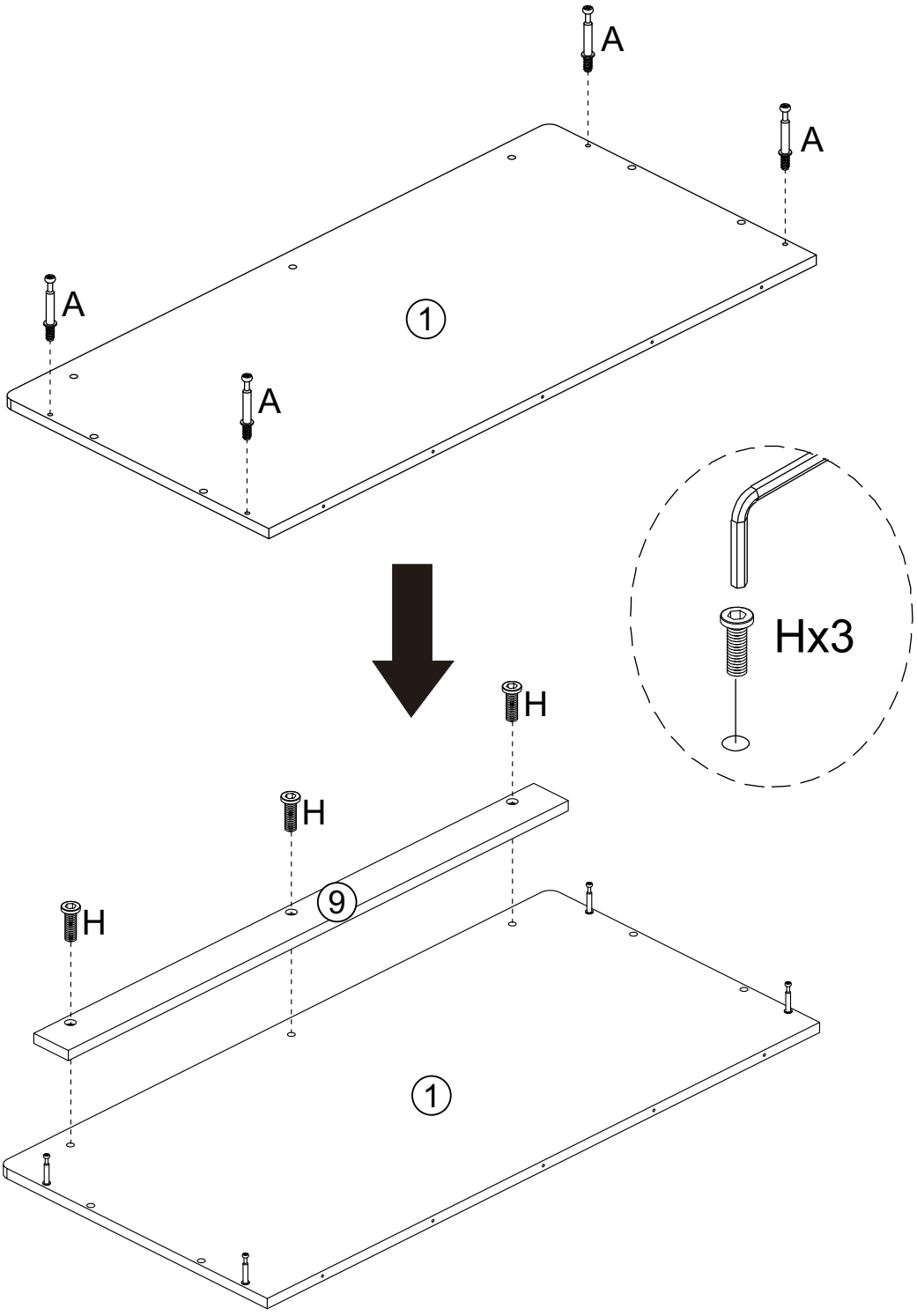

Step 11

B		Ø15x10mm	4pcs
C		Ø8x30mm	4pcs

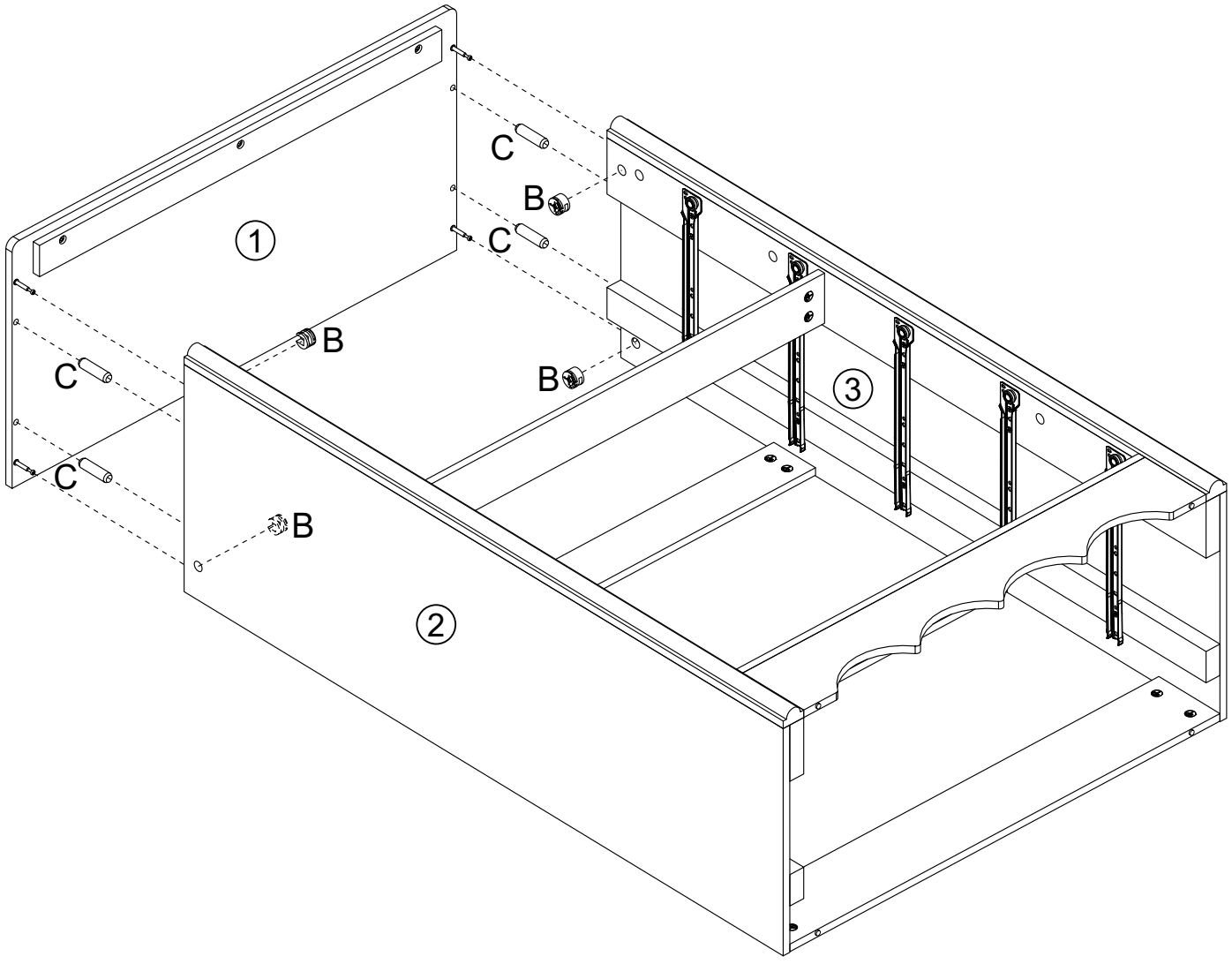

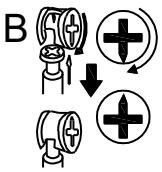

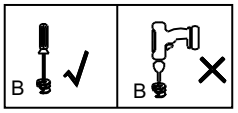

Step 12

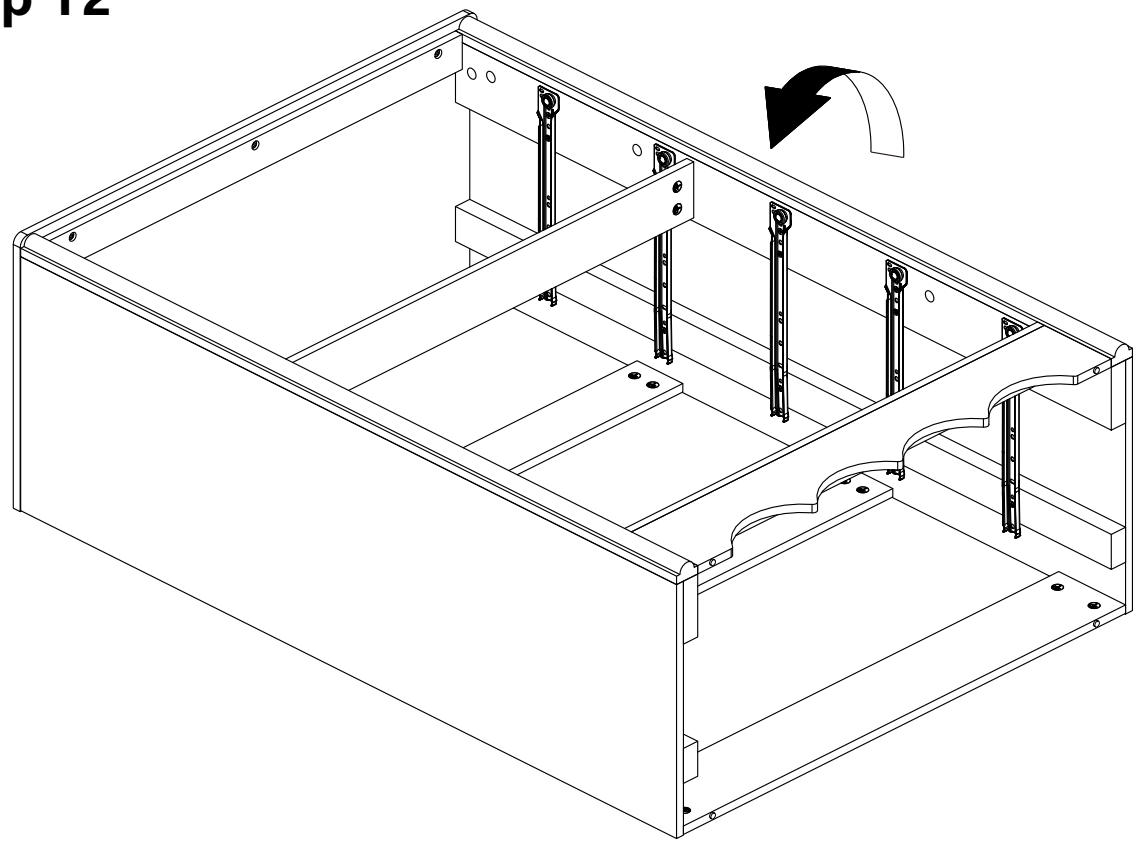

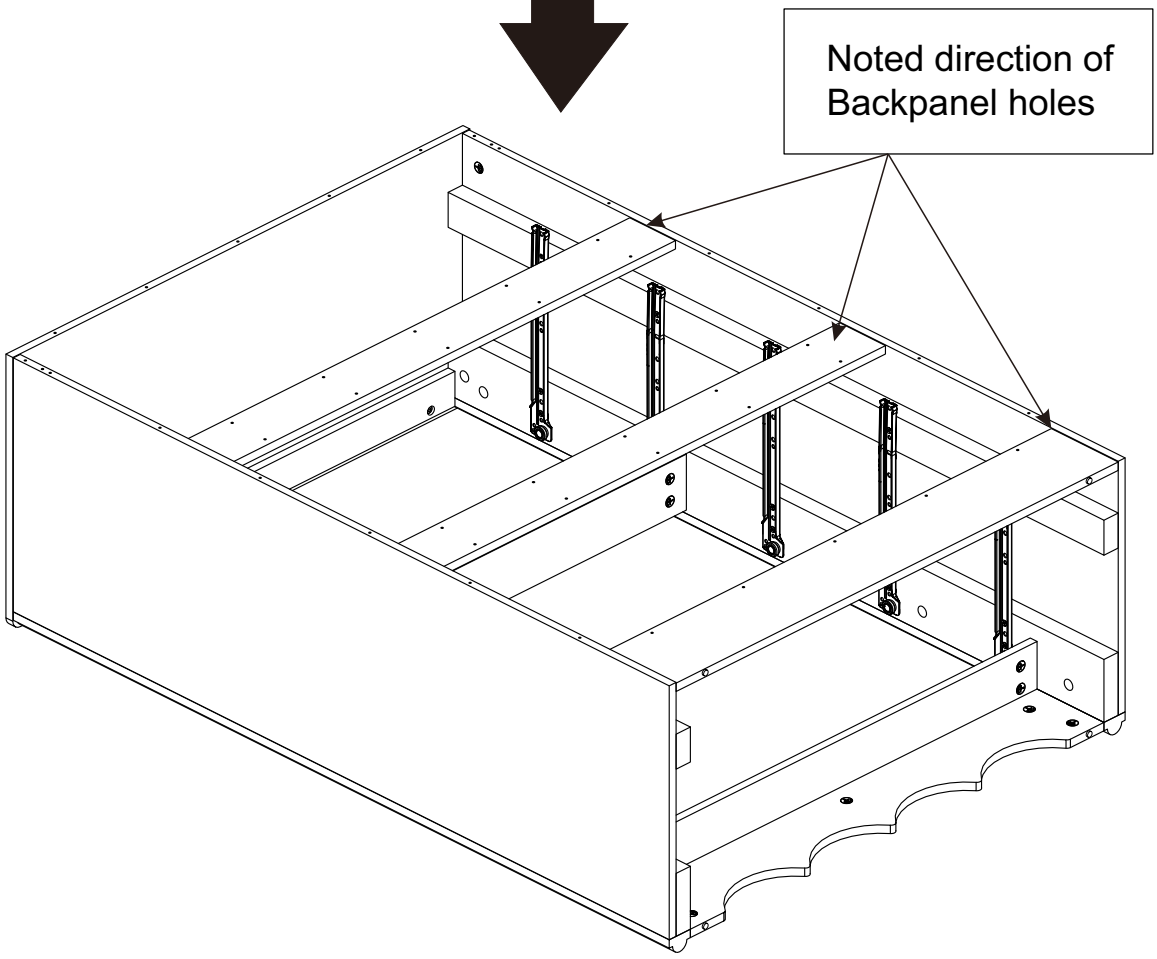

G	Ø3.5x14mm	42pcs

Step 13

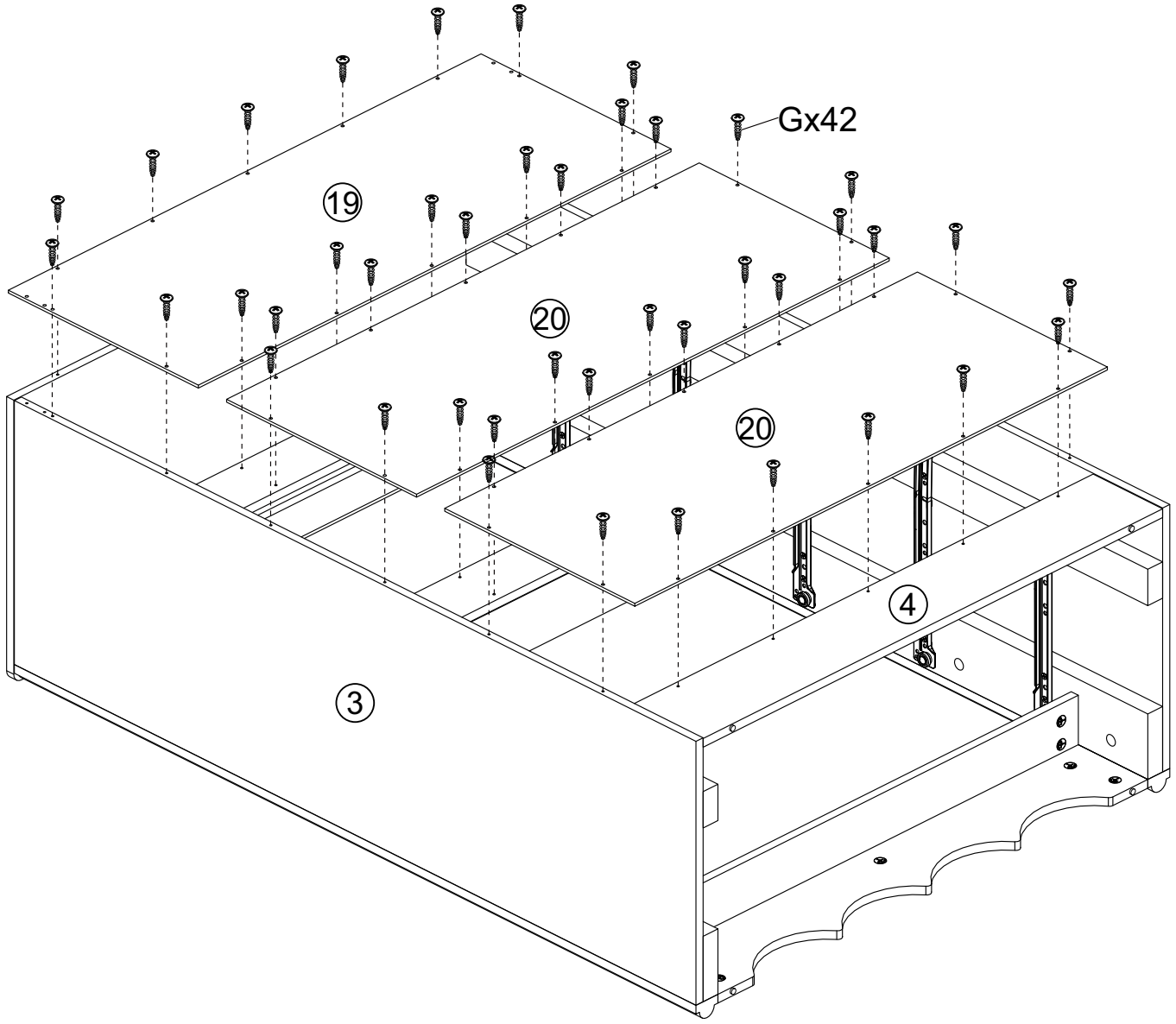

D		M4x35mm	20pcs

Step 14

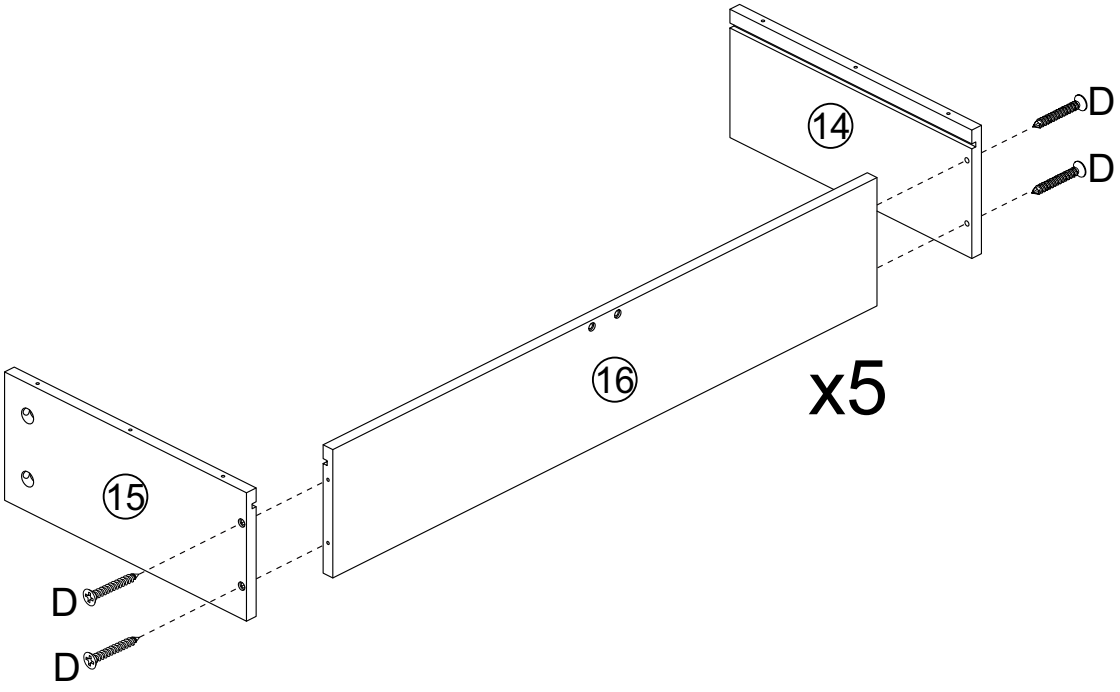

Step 15

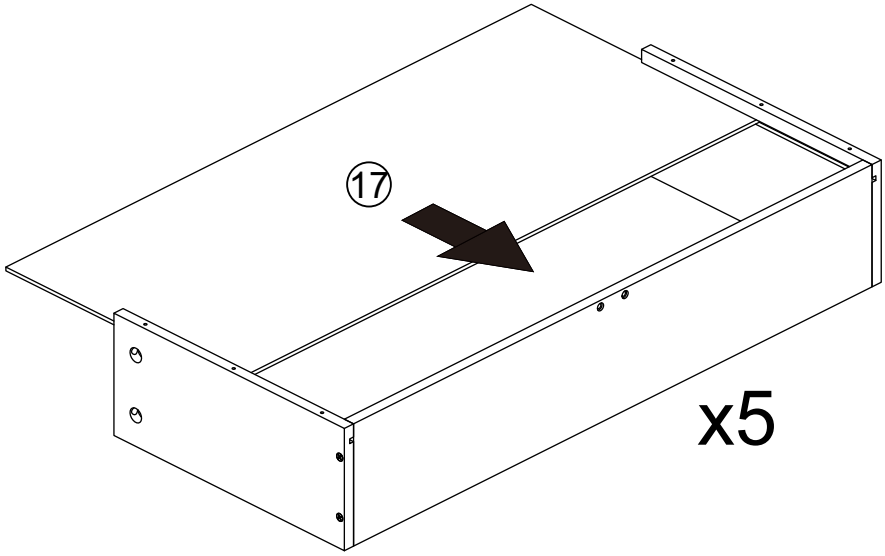

D	M4x35mm	10pcs

Step 16

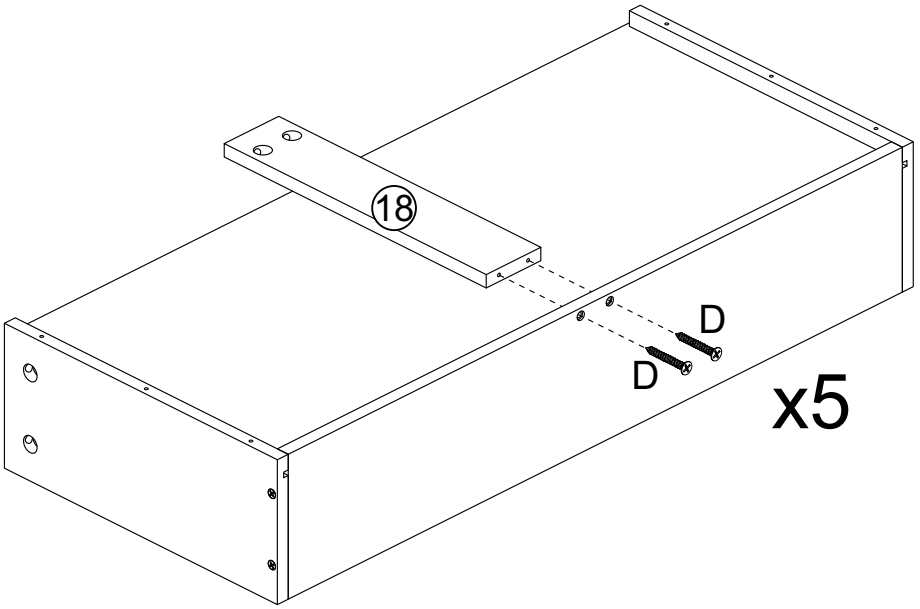

A	Ø6x35mm	30pcs
F	M3.5x22mm	10pcs
I		10pcs

Step 17

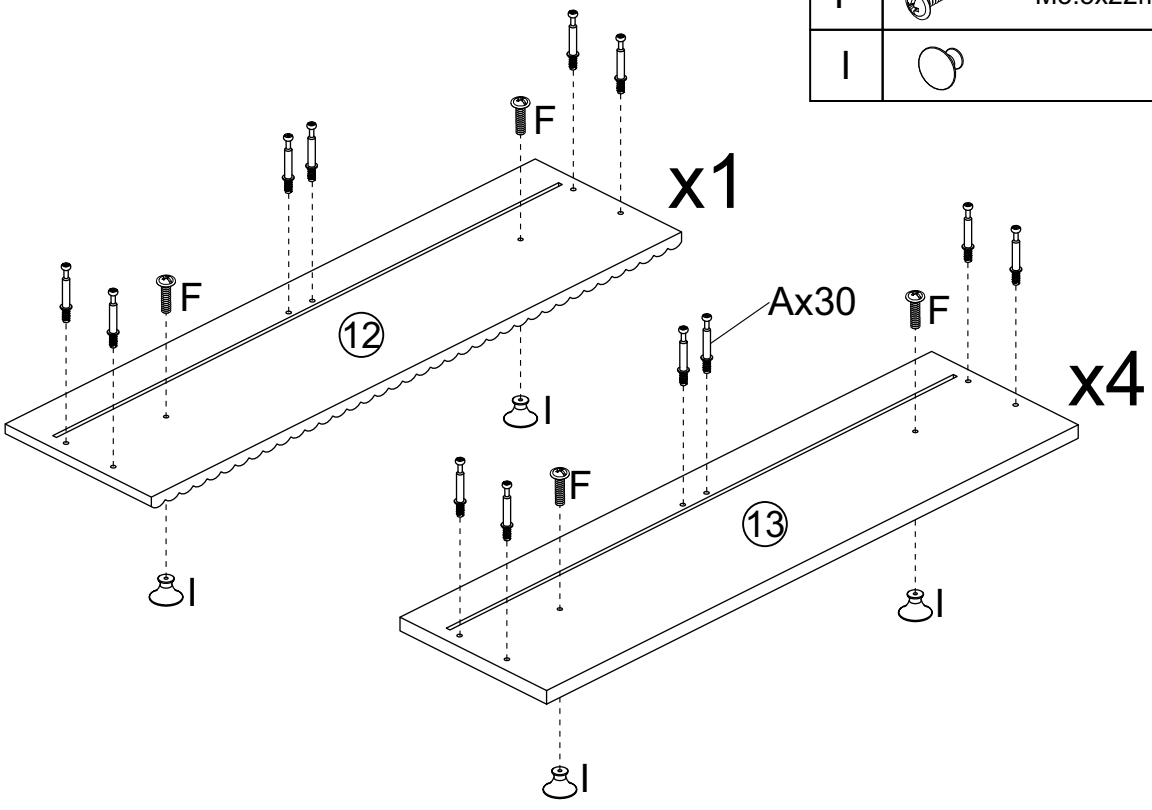

B	Ø15x10mm	30pcs

Step 18

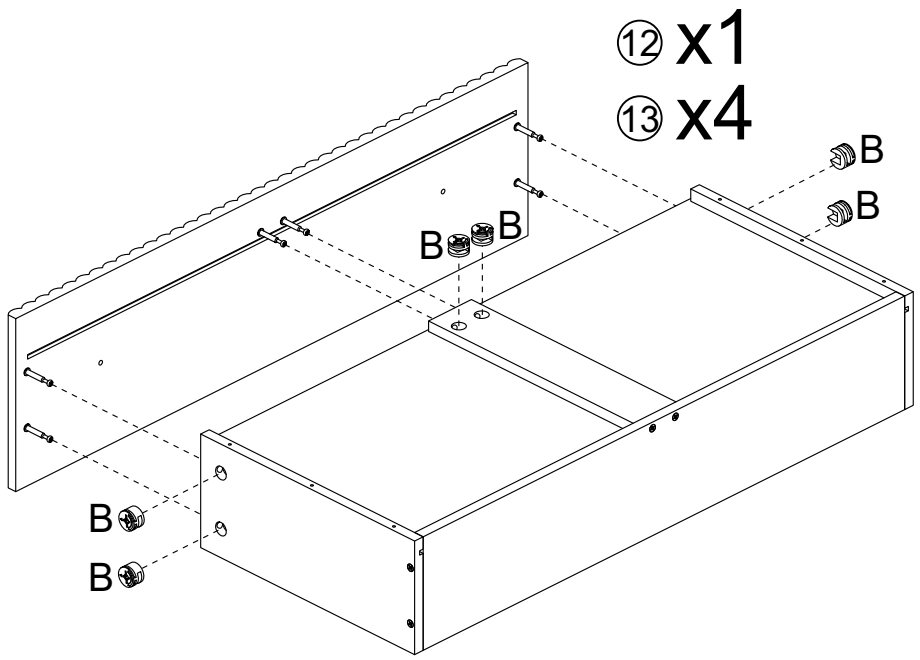

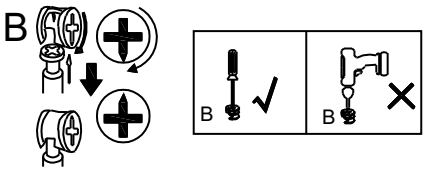

E	Ø3.5x14mm	30pcs
DL	300mm	5pcs
DR	300mm	5pcs

Step 19

Noted the slide rollers are nearby the drawer end.

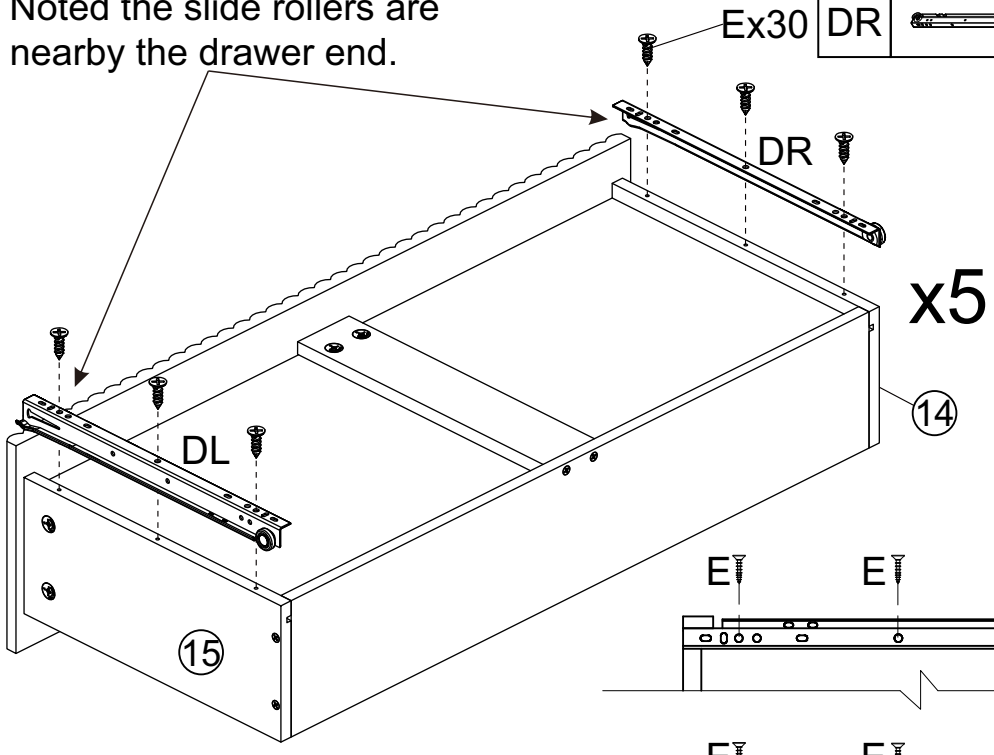

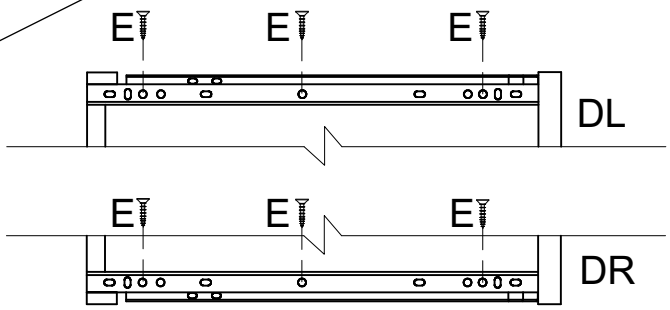

Step 20

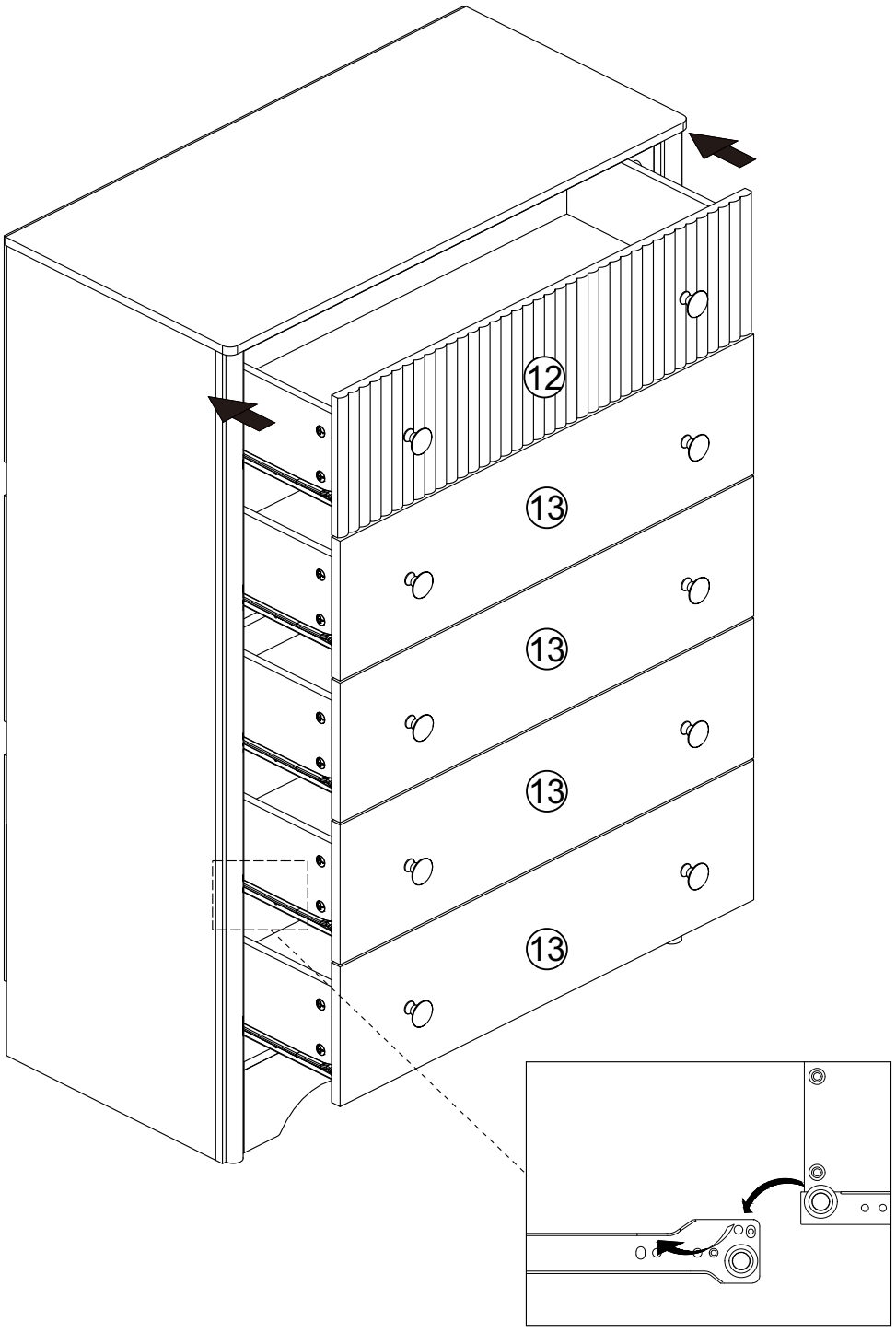

Step 21

E	Ø3.5x14mm	4pcs
J		4pcs
K		2pcs
L		4pcs
M	M4x50mm	4pcs

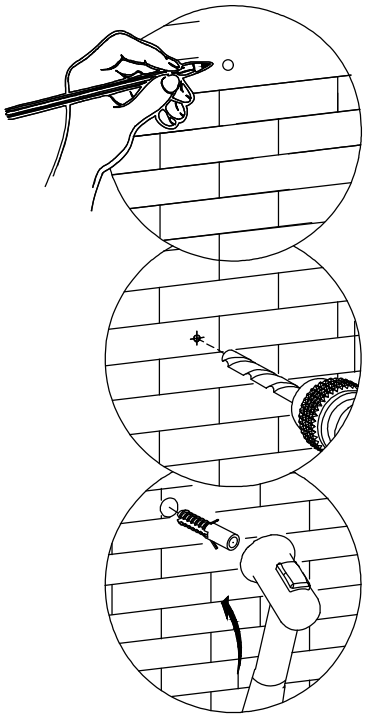

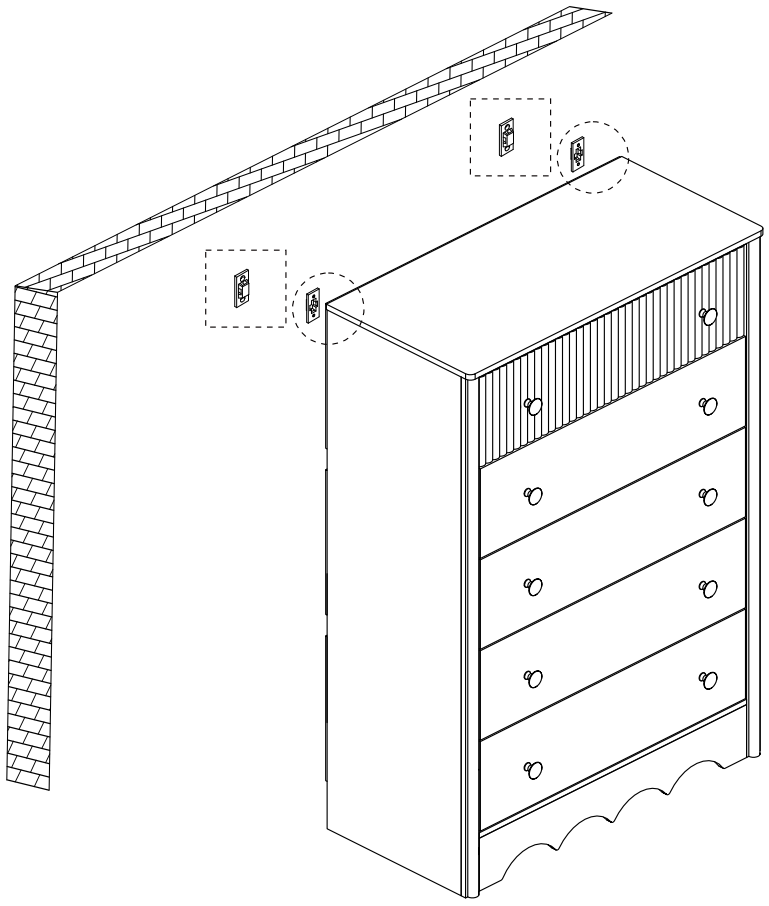

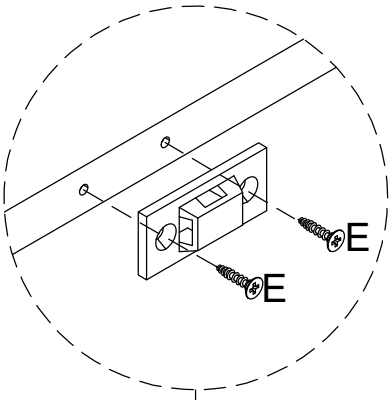

To reduce the risk of furniture tipping over, you MUST anchor this item to the wall securely by following the steps below:

1)Place this unit in your desired location. Use a pencil to make a small mark on the solid wall through the holes on the top back panel.

2)Move the unit away and drill holes in the solid wall at the pencil marks.

3)Screw the wall anchor into the wall holes.

4)Place the unit against the wall and fix the screw through the wall bracket into the wall anchor .

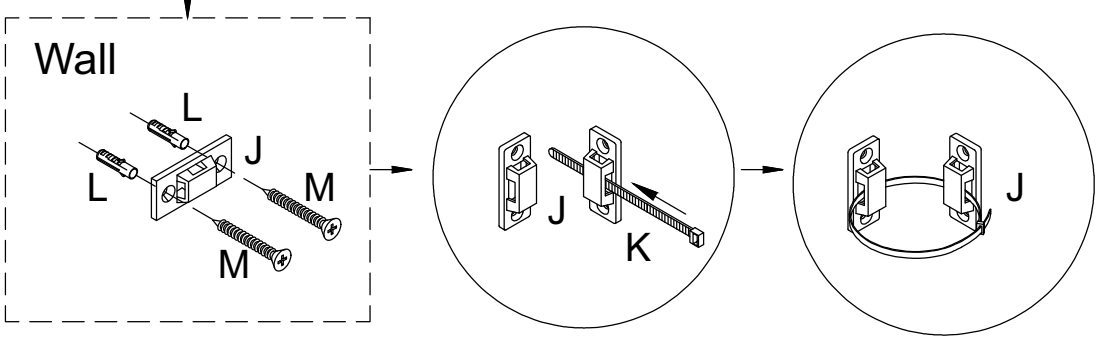

IMPORTANT SAFETY INFORMATION

Please carefully read the instructions and caution warnings below before assembling the product. Following this guide will ensure that you install, use and maintain the product properly.

- Please keep this installation and user manual/instructions for future reference in case you need to assemble the product.
- Do not assemble if you notice serious damage such as cracks or bends.
- During installation, please use work gloves for hand safety.
- Please assemble the unit on carpeted floor or the flat cardboard box to avoid scratching the surface or your floor while assembling on the floor.
- To assemble, please use the complimentary installation tools (Allen Wrench). Pay more attention to the direction of components at each steps.
- It is recommended that two people work together to assemble the product.
- Please do not tighten the screws up too much, just to 80% before you finish to make the installion go on successfully.

RETURN POLICY

We believe you will absolutely love your new product. But for some reason you want to return your item, please contact us within 30 days after receiving and ensure that the product which you want to return is in a good condition in the original box with all original certificates of purchase, manuals and accessories attached.

HOW TO MAINTAIN YOUR PRODUCT:

- Check the screws of the product are not loose from regular use.
- Do not use sharp instruments, rubbing alcohol, corrosive chemicals, or abrasive cleaners to clean the product.
- Do not keep the product in a damp environment for a long period of time. The damp environment may cause the iron components to rust and the plates to bulge and crack.

How to find us?

Customer Service

Email: Support @ garvee.com

GARVEE

support@garvee.com