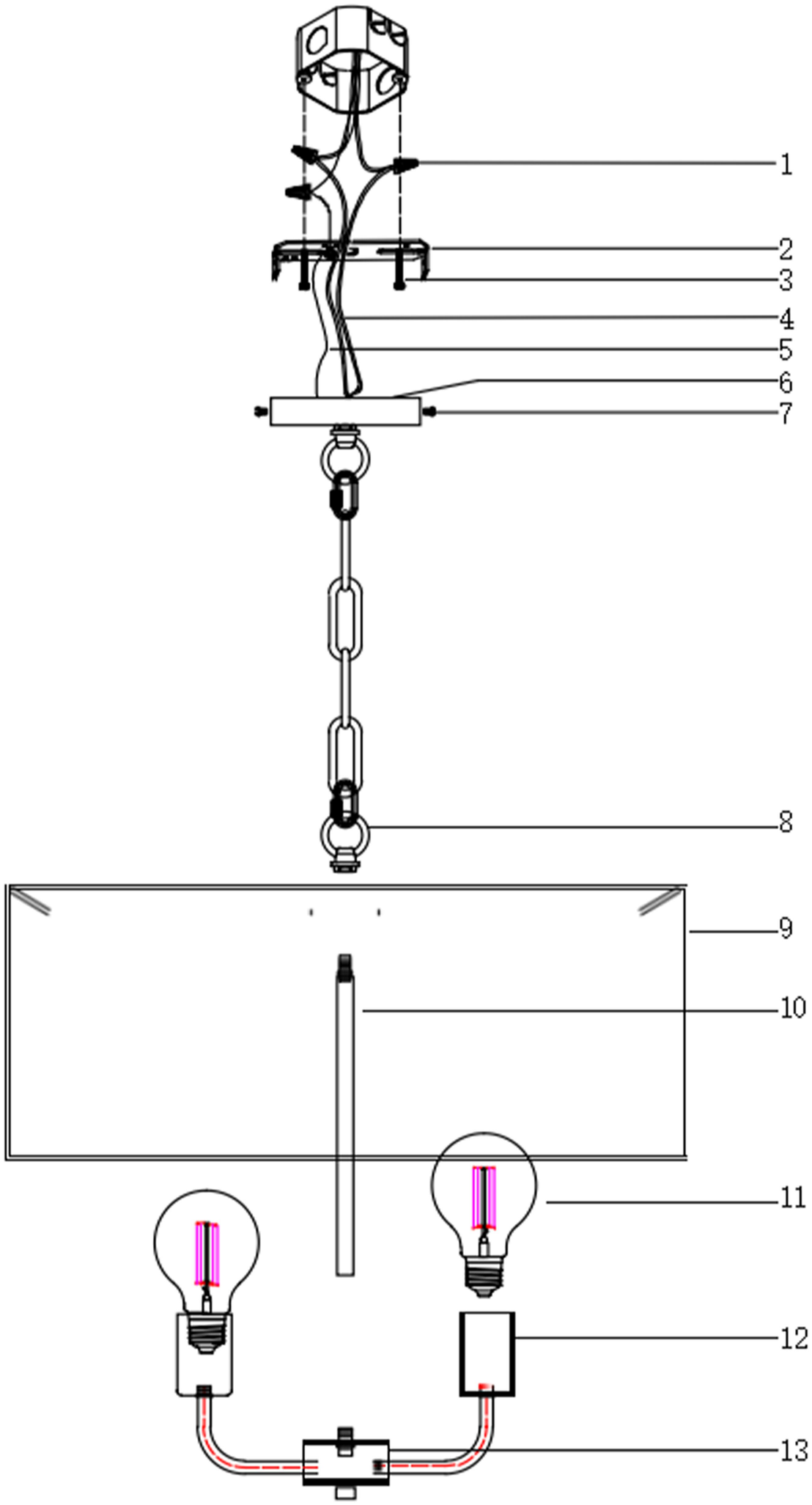

Installation Steps:

Step 1: Fix the mounting plate (2) to the junction box with screws (3).
Step 2: Pass the power cord from the bottom box (13) through the center hole of the straight pipe (10) light frame (9) and tighten it at both ends, and then pass it through the straight basin (6).
Step 3: Connect the lamp body power cable (4) to the external power cable with a wiring cap (1), secure the ground cable (5) with a green ground screw, and then connect the wiring cap (1) to the external ground cable.
Step 4: Fix the straight edge basin (6) to the mounting plate (2) with screws (7).
Step 5: Install the bulb (not included)(11) on the lamp holder (12).

Accessories:

2: Mounting Plate*1	
3: Mounting Screw*2	
7: Mounting Screw*2	
1: Wiring cap*3	
10: Straight tube*1	

Notice: This light fixture should be installed in accordance with all applicable, local installation codes, and by a person familiar with the construction and operation of it, as well as the hazards involved. Inspect items and contents carefully. If any damage or defect is found, do not install it.