OFFICE CHAIR

ASSEMBLY INSTRUCTIONS

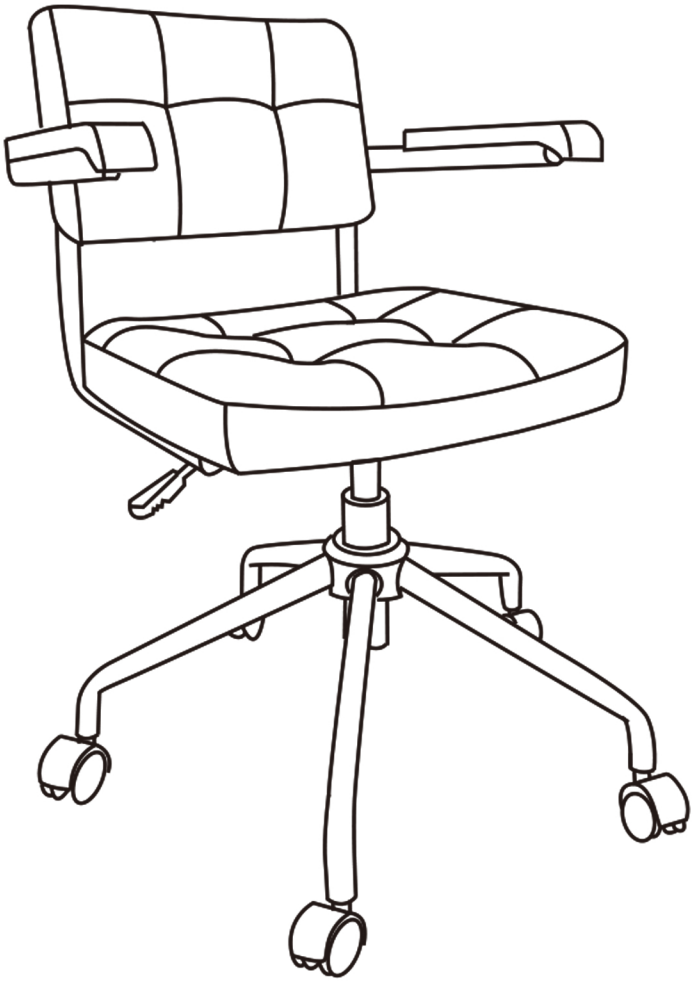

Need help? Contact us through the shopping platform.
Or email: service.furniture@outlook.com

WARNING! Only trained personnel may replace or repair seat height adjustment components with energy accumulators.

HALF HOUR	2 PEOPLE	1 X 1 M
ASSEMBLY TIME	REQUIRED FOR ASSEMBLY	FLOOR SPACE REQUIRED

INSTALLATION SUGGESTIONS

PLEASE READ ALL THE INSTRUCTIONS CAREFULLY BEFORE ASSEMBLING AND USING THE PRODUCT.

1. Please check whether all parts are complete according to the installation instructions.
2. Please ensure that the installation space is clean and flat to avoid dirt and damage to the product parts.
3. In each step, do not tighten bolts/screws completely until all bolts/screws are lined up and tightened 70% separately. Do not over tighten bolts/screws to avoid stripping.
4. We recommend that all assembled parts should be placed near the assembly location to avoid loss or forgetting while assembling.

TIPS FOR GIVING FEEDBACK

Please provide helpful information. We will give you feedback within 24h.

1. Describe your problem in detail and explain it with some clear multi-angle photos of the problem area.
2. Send your order ID and the letter number and quantity of the part in question from the parts list.
3. A clear photo of the side of the box that has the product information or the label on the bottom of the cushion.

PARTS AND HARDWARE LIST

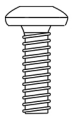 M6*20mm **A*2**	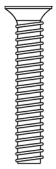 M6*40mm **B*8**	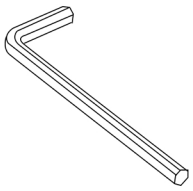 **C*1**	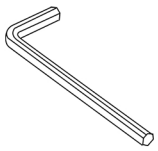 **D*1**	**E*5**

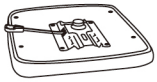 **F*1**	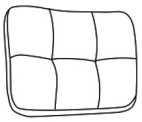 **G*1**	**H*1**	**I*1**	**J*1**	**K*1**

Contact us: service.furniture@outlook.com

ASSEMBLY STEPS

Assembly tips:

1. Just tighten the screws to 70% before all of them are aligned. After all the screws arealigned, tighten the remaining parts.
2. The screws on the armrest may be loose during transportation, please check whether screws are tightened.

Tips: Tighten screws 70%

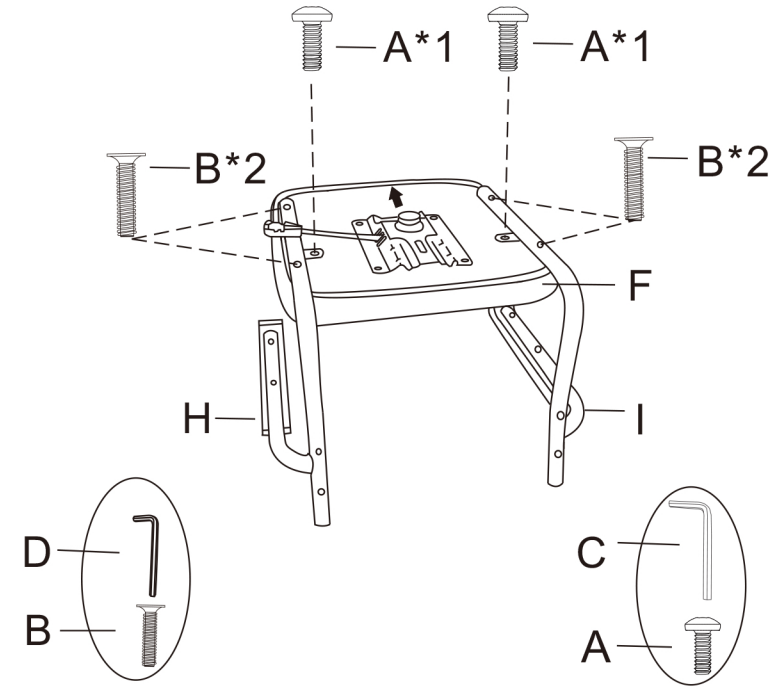

STEP 1.
Secure parts (H & I) to the seat cushion (F) using screws (A*2) and screws (B*4).

Tips: Tighten screws 70% separately and then fully tighten

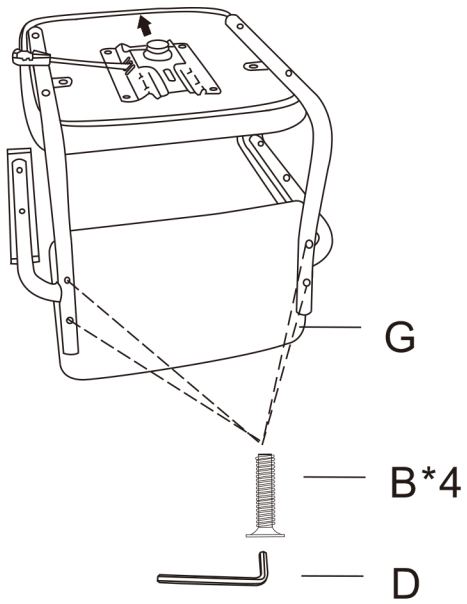

STEP 2.
Secure the backrest (G) to parts (H&I) using screws (B*4).

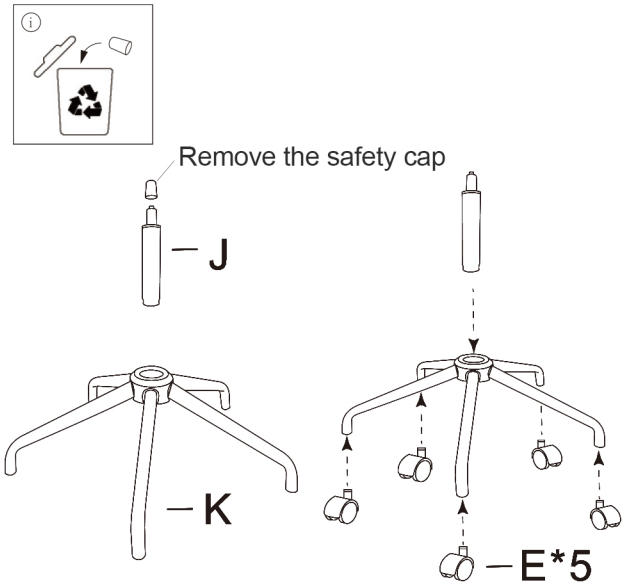

STEP 3.
Put the gas lift (J) into the chair notch, push the casters (E*5) into the base (K).

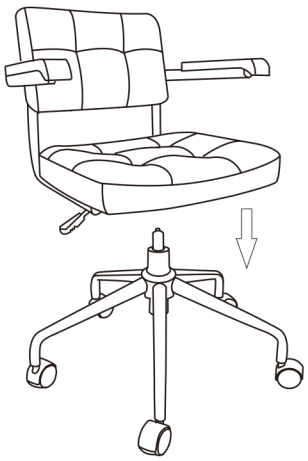

STEP 4.
Place the seat on top of the gas lift,with the holes in the metal mechanism fitting over the end of the gas lift.

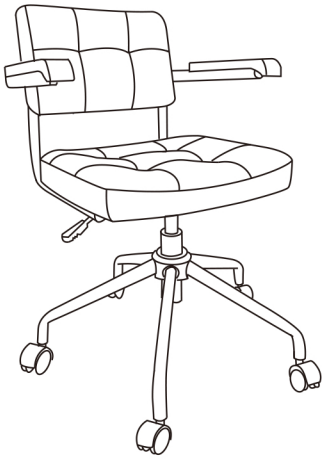

STEP 5.
Congratulations! You have possessed an exquisite chair.

WARRANTY TERMS & CONDITIONS

1. We provide warranty for the product for one year.
2. The warranty period starts on the delivery date.
3. If the product has quality problems, contact us and we promise we will solve it for you.

Contact us: service.furniture@outlook.com