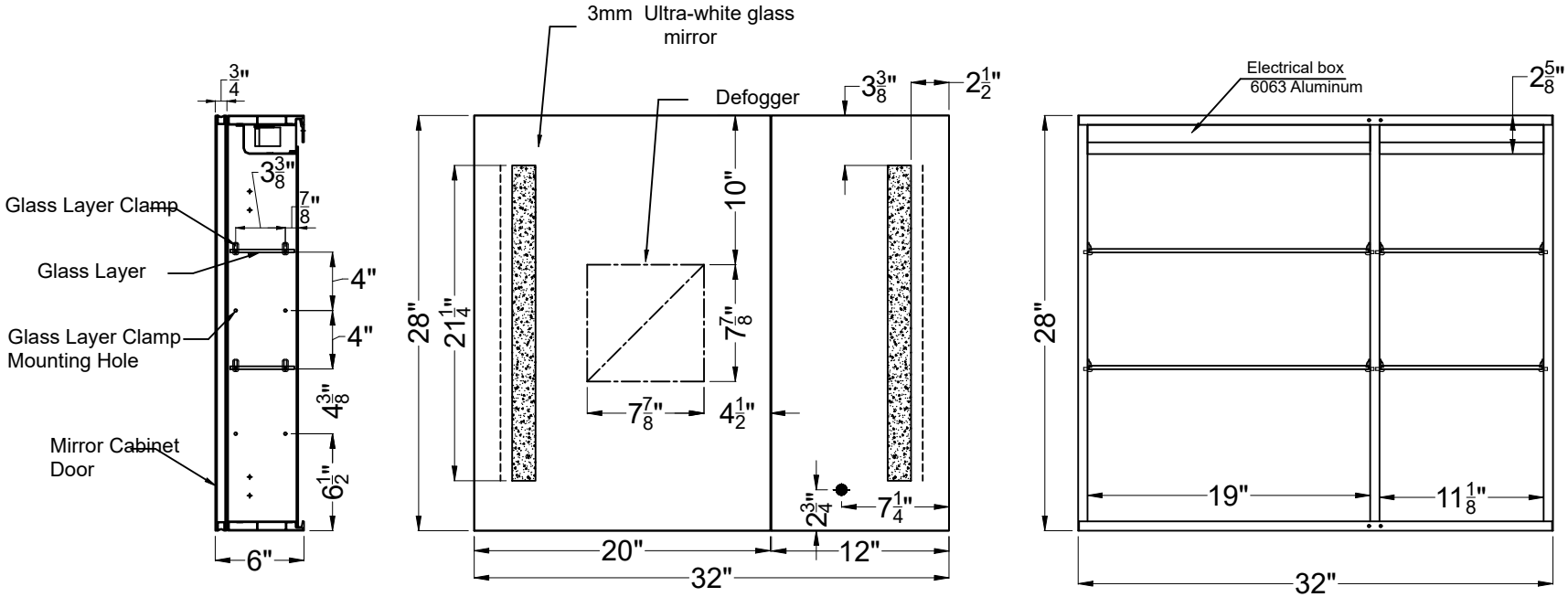

Frosted Area

Open Area

Mark	Count	File Number	Signature	Date	Drawings	Draw no mark	Weight	Number	Ratio
Designer		ZWQ	Standard						
version		A.0	Judgement			Total 1 page		1 page	
Approve									
Technology			Date	2020.05.29					