ASSEMBLY INSTRUCTIONS

2636Q

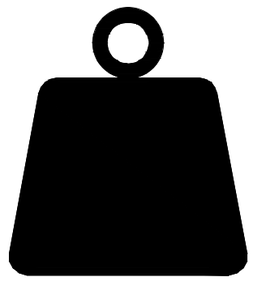

Weight Capacity Max to 500LBS

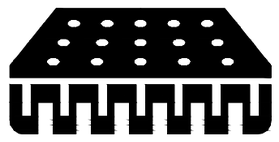

Mattress Size :
80"L x 60"W x (6"-10")H

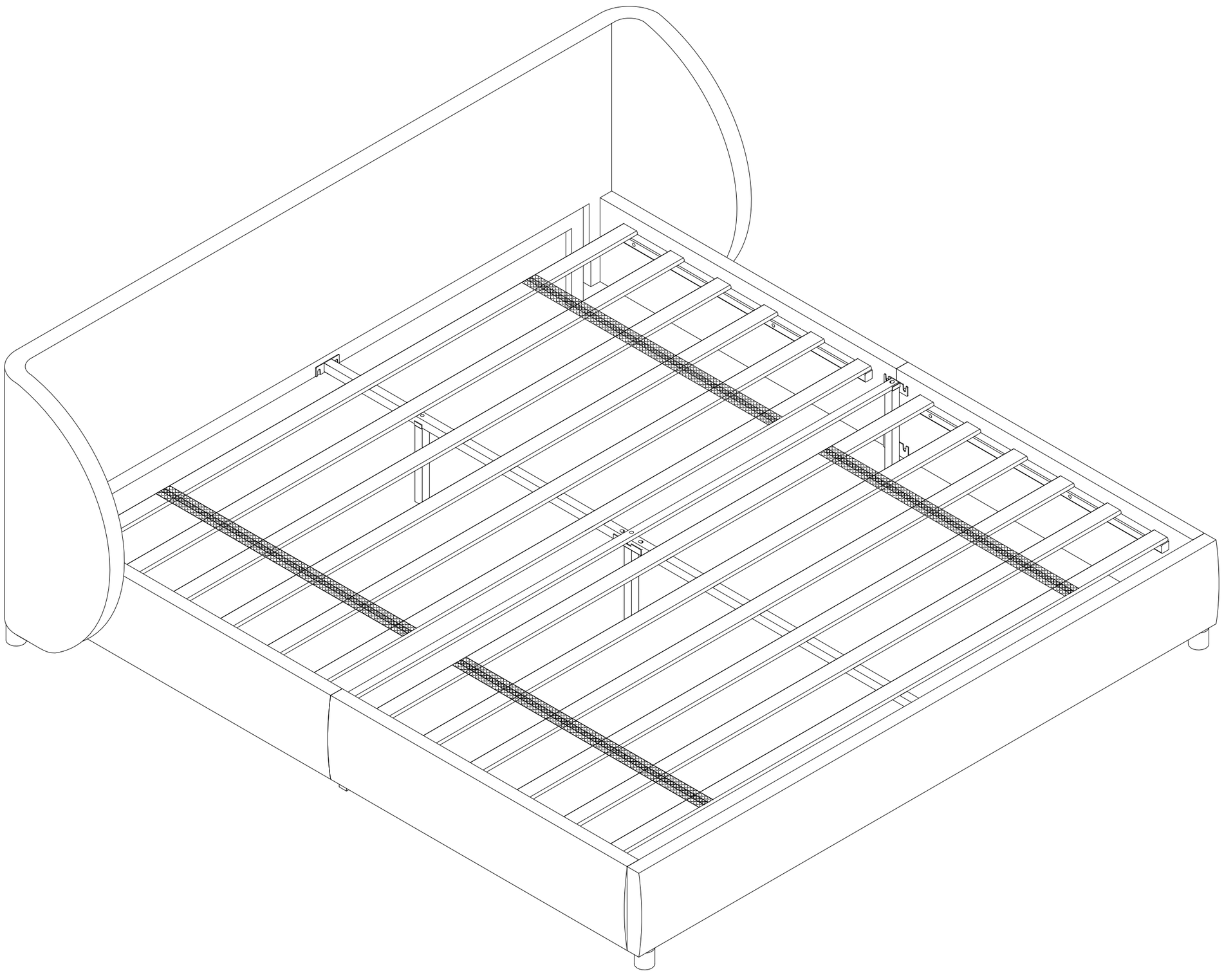

Install all screws according to the instructions, and then tighten them completely.

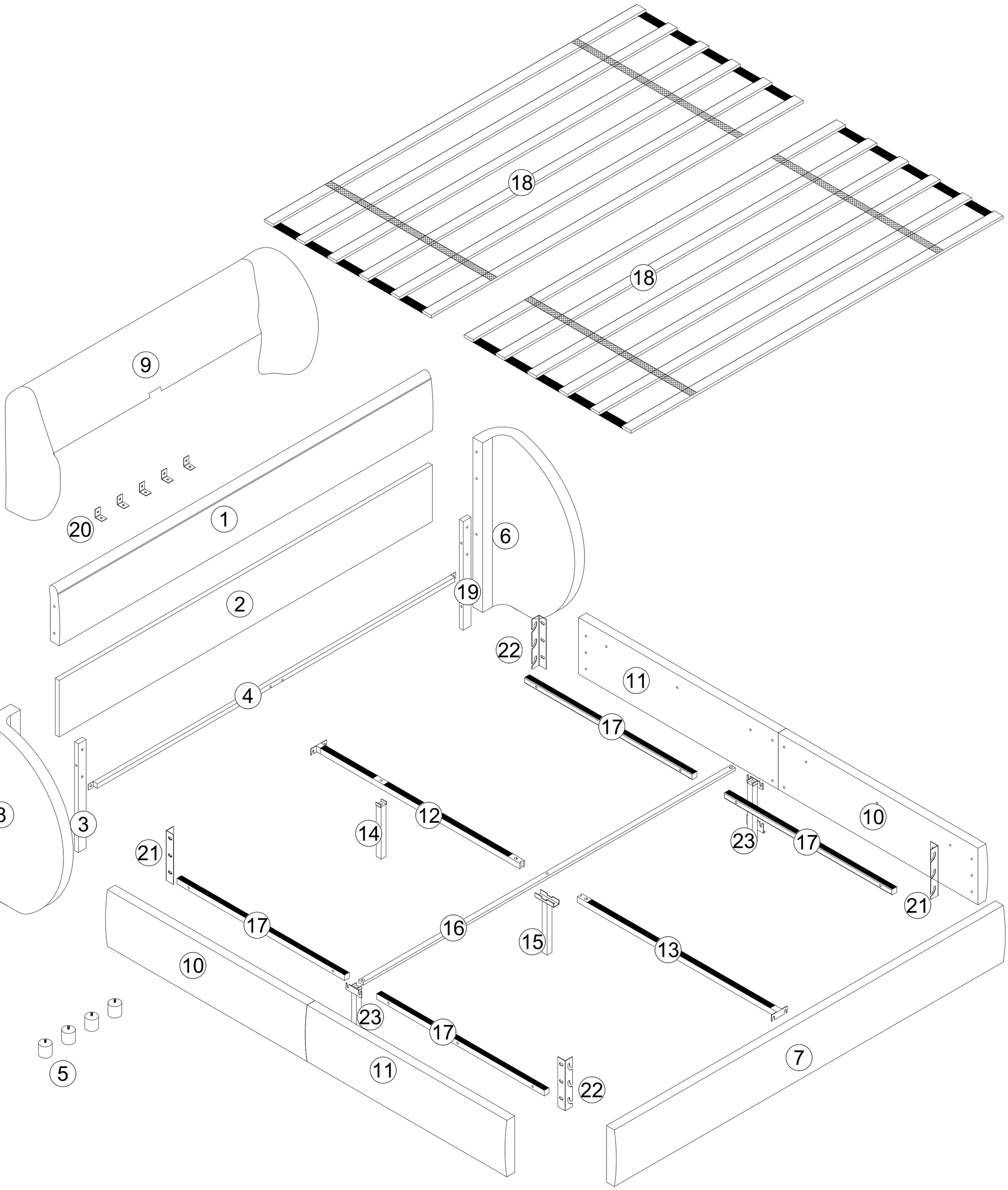
18
18
9
20
1
2
6
19
22
11
4
17
8
3
12
14
10
23
17
21
21
17
16
15
13
10
23
17
11
22
7
5

2636Q-B MEAS: 66*11*9 INCH

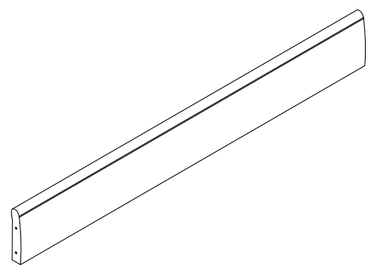	1-(1PC)
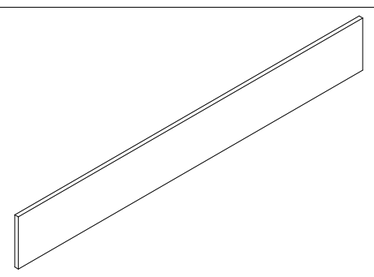	2-(1PC)
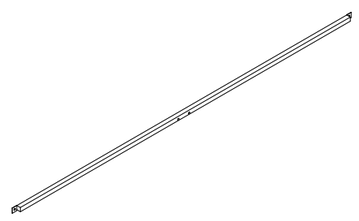	4-(1PC)
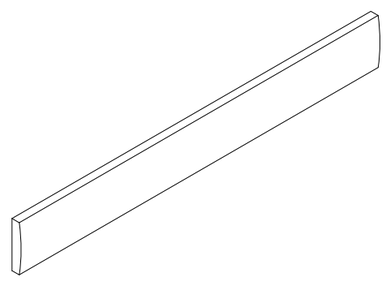	7-(1PC)
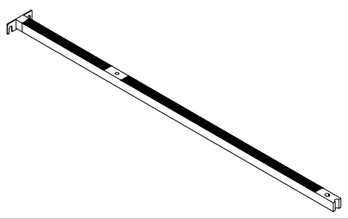	12-(1PC)
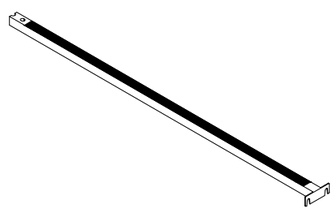	13-(1PC)
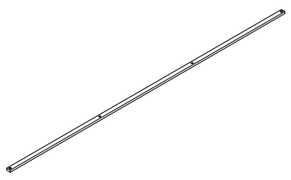	16-(1PC)
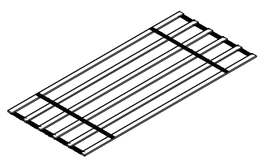	18-(2PCS)

2636Q-A MEAS: 42*22*14 INCH

 M8*15mm	A-10PCS
 M8*20mm	B-38PCS
 M8*40mm	C-26PCS
 M8*65mm	D-4PCS
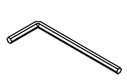 M5	E-1PC

2636Q-A MEAS: 42*22*14 INCH

	3-(1PC)
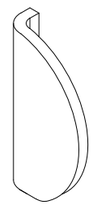	8-(1PC)
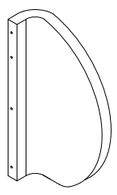	6-(1PC)
 M8*Ø50*50mm	5-(4PCS)
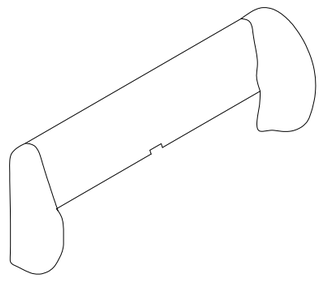	9-(1PC)
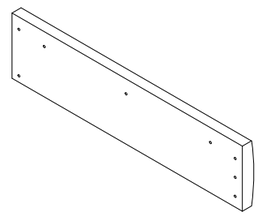	10-(2PCS)
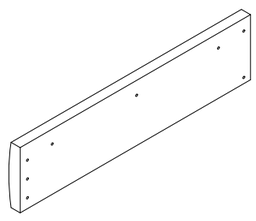	11-(2PCS)
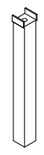	14-(1PC)
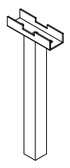	15-(1PC)
	17-(4PCS)
	19-(1PC)
	20-(5PCS)
	21-(2PCS)
	22-(2PCS)
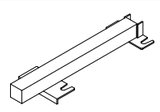	23-(2PCS)

ASSEMBLY INSTRUCTIONS

STEP 1

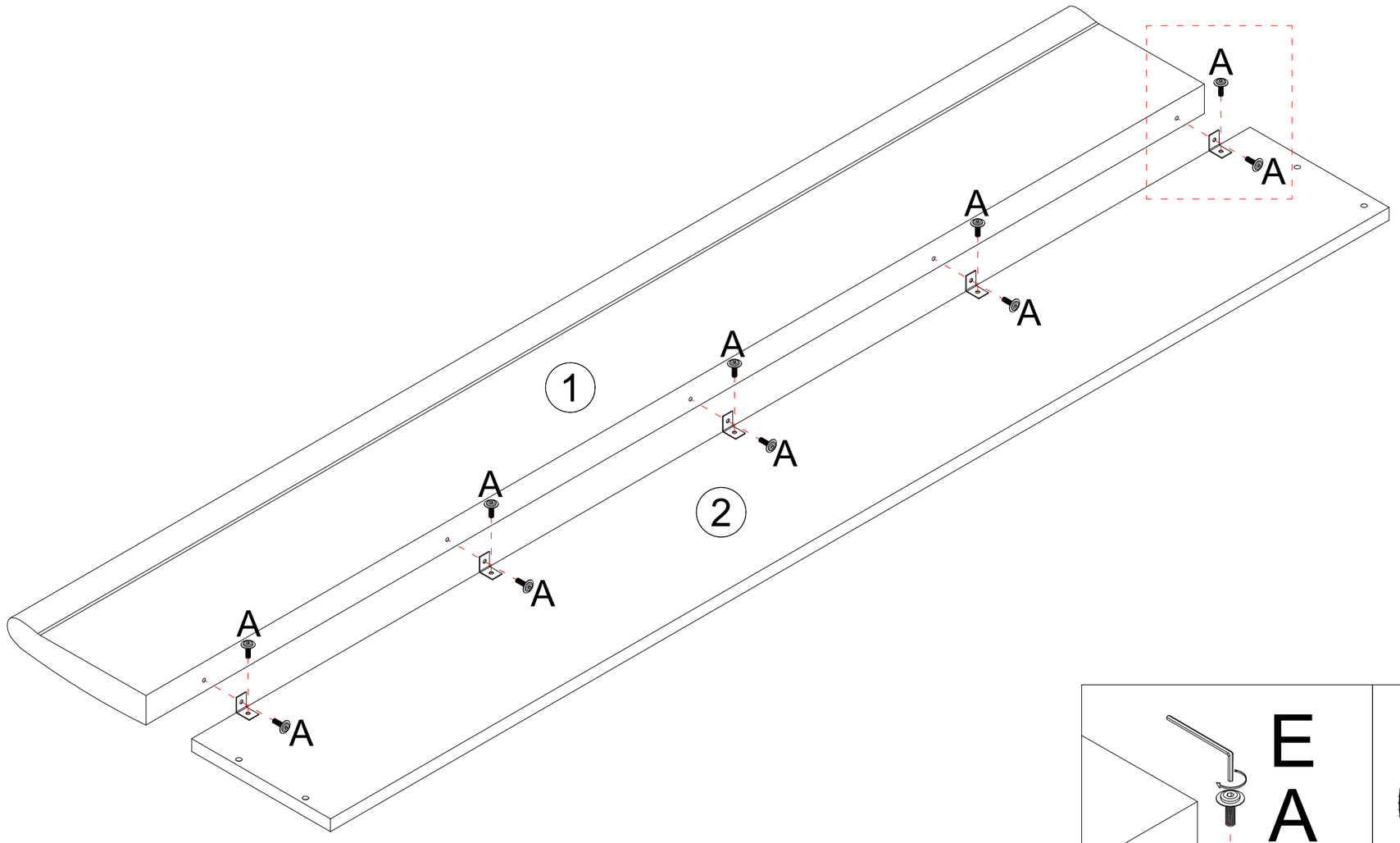

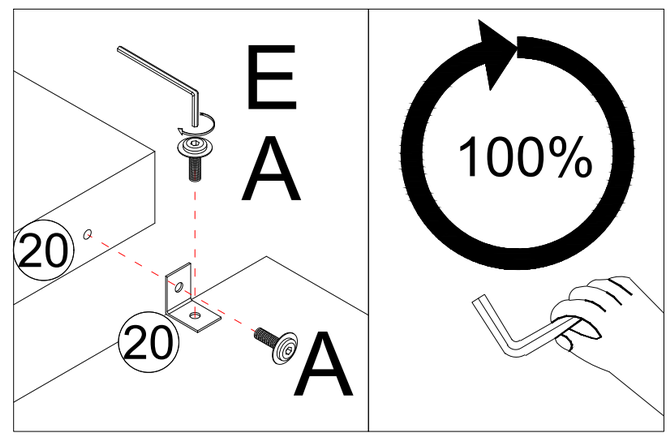

STEP 2

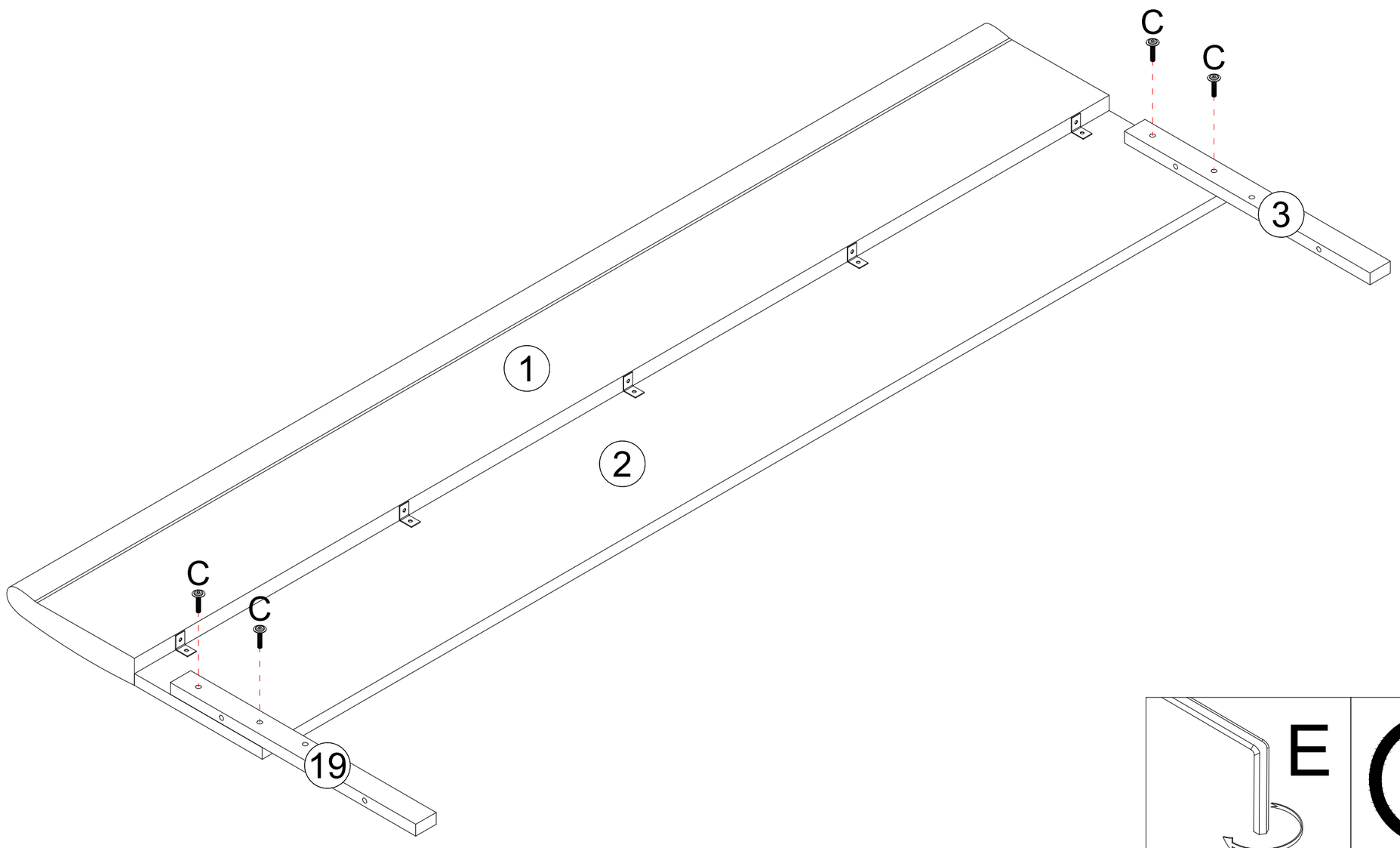

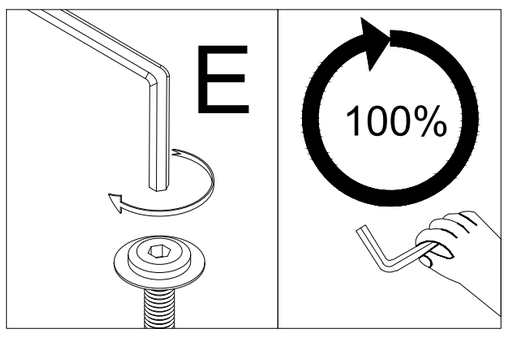

ASSEMBLY INSTRUCTIONS

STEP 3

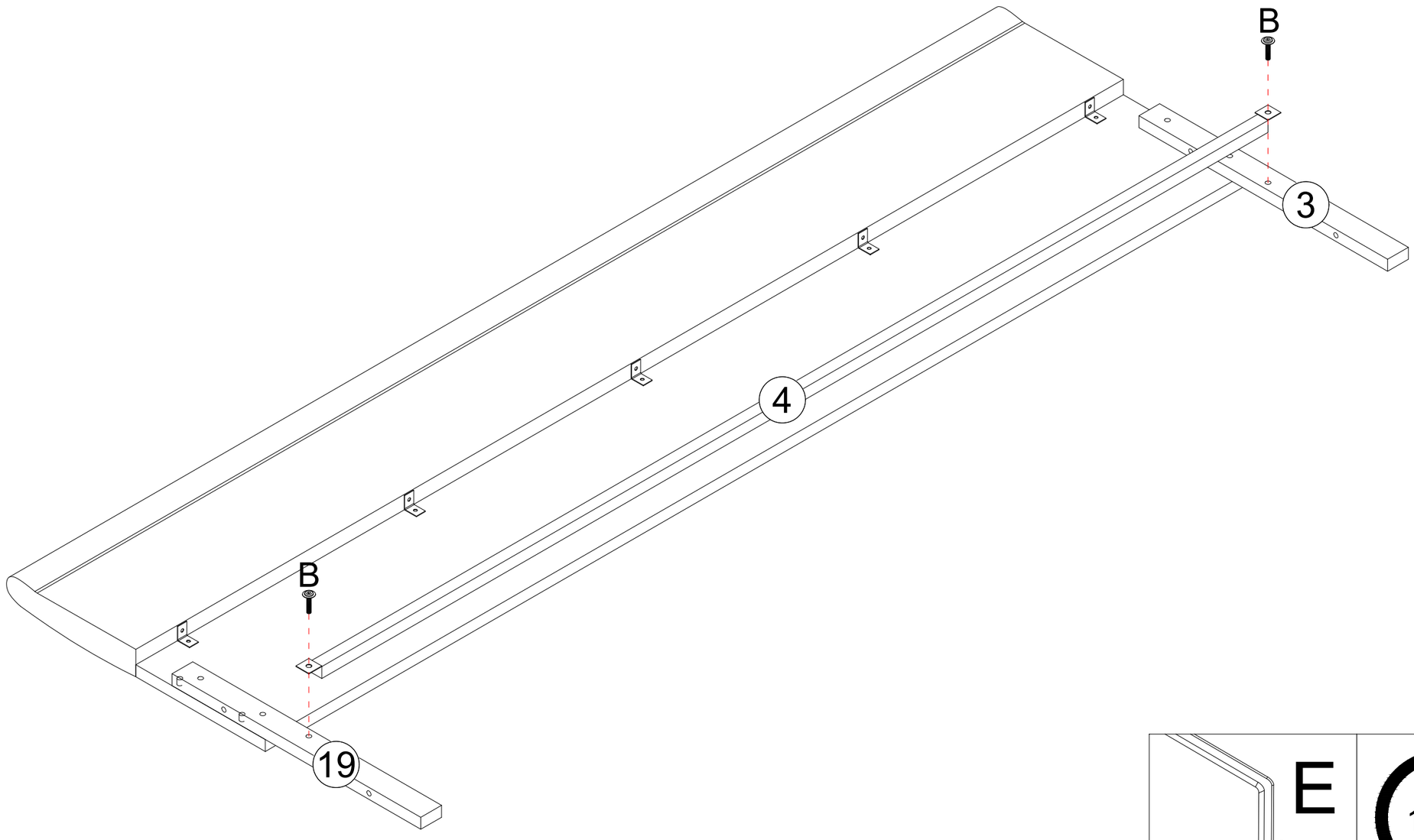

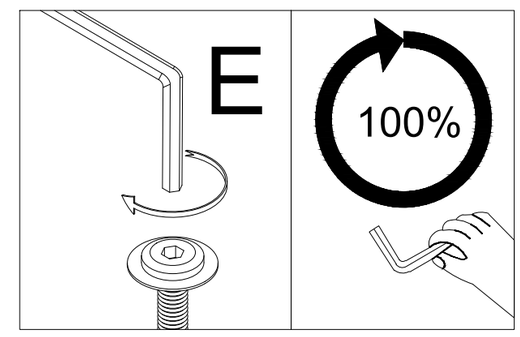

STEP 4

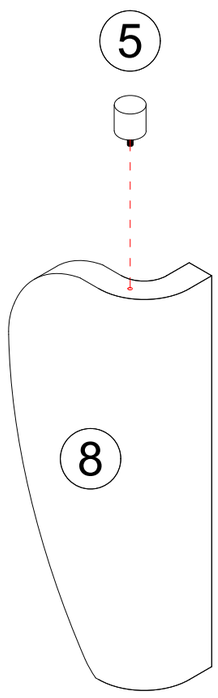

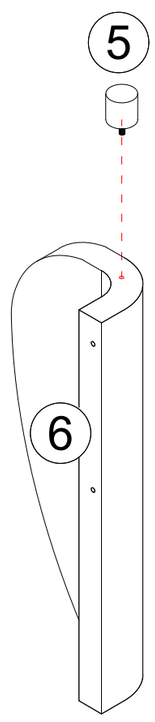

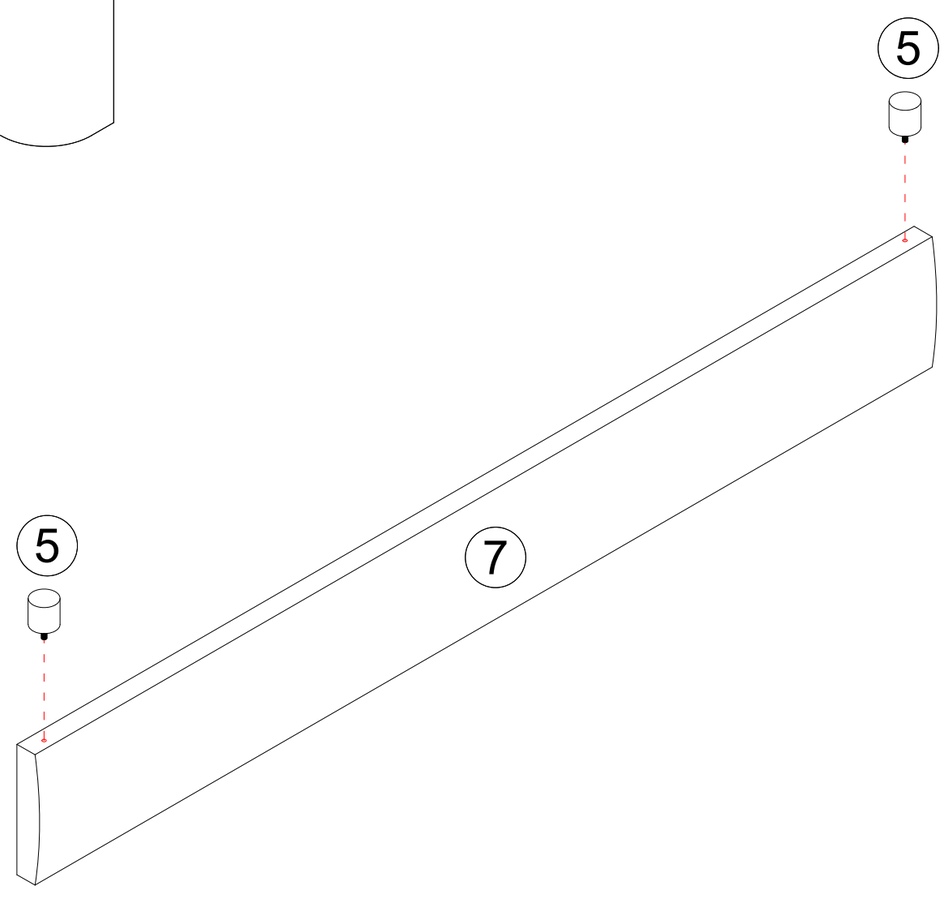

ASSEMBLY INSTRUCTIONS

STEP 5

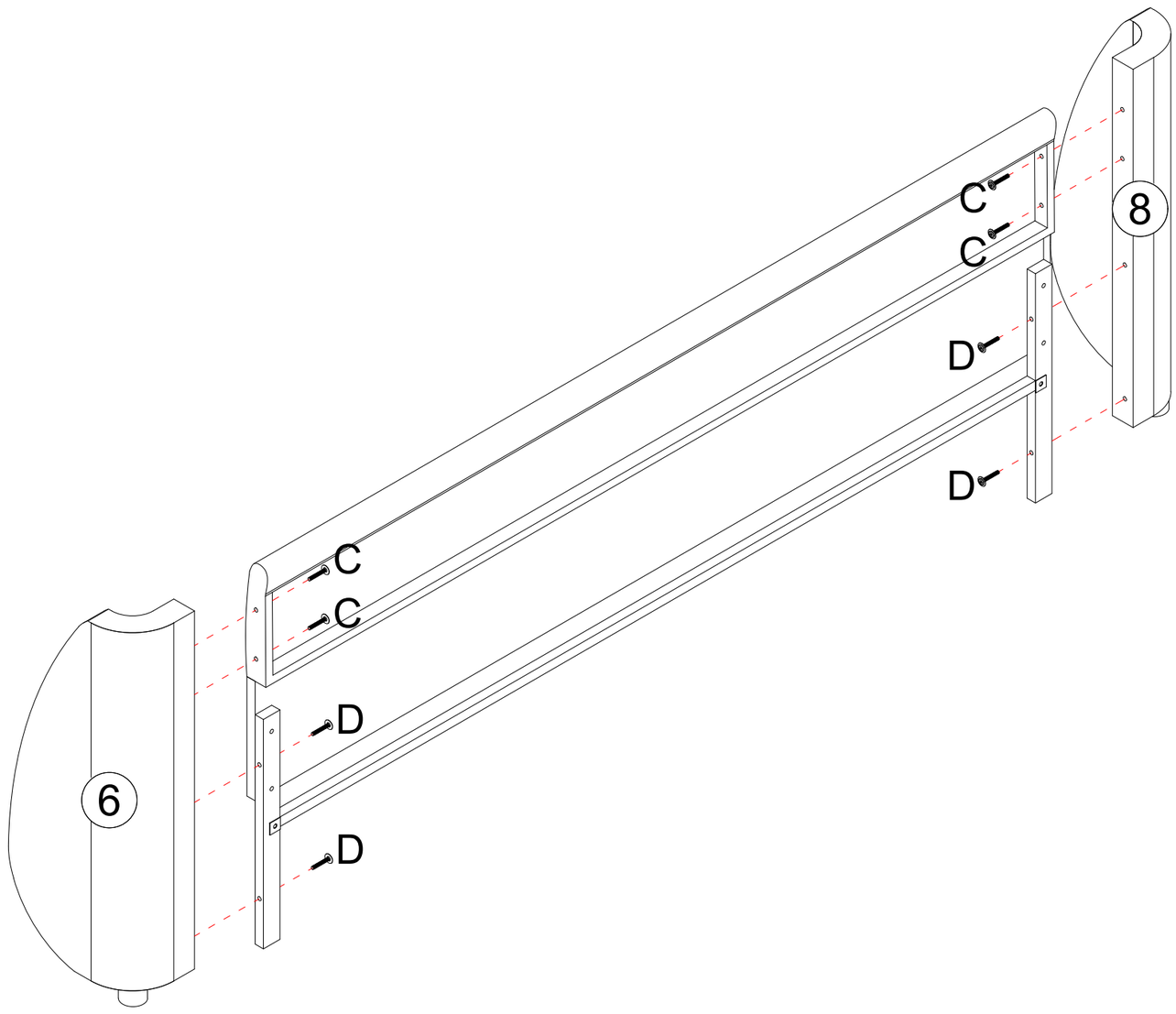

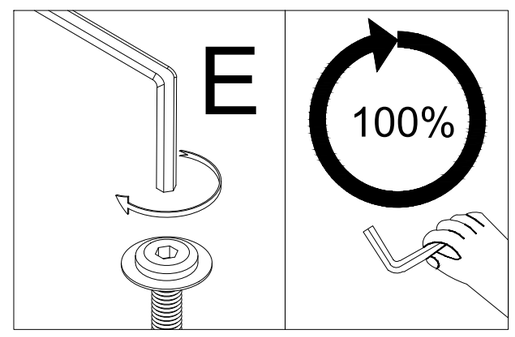

STEP 6

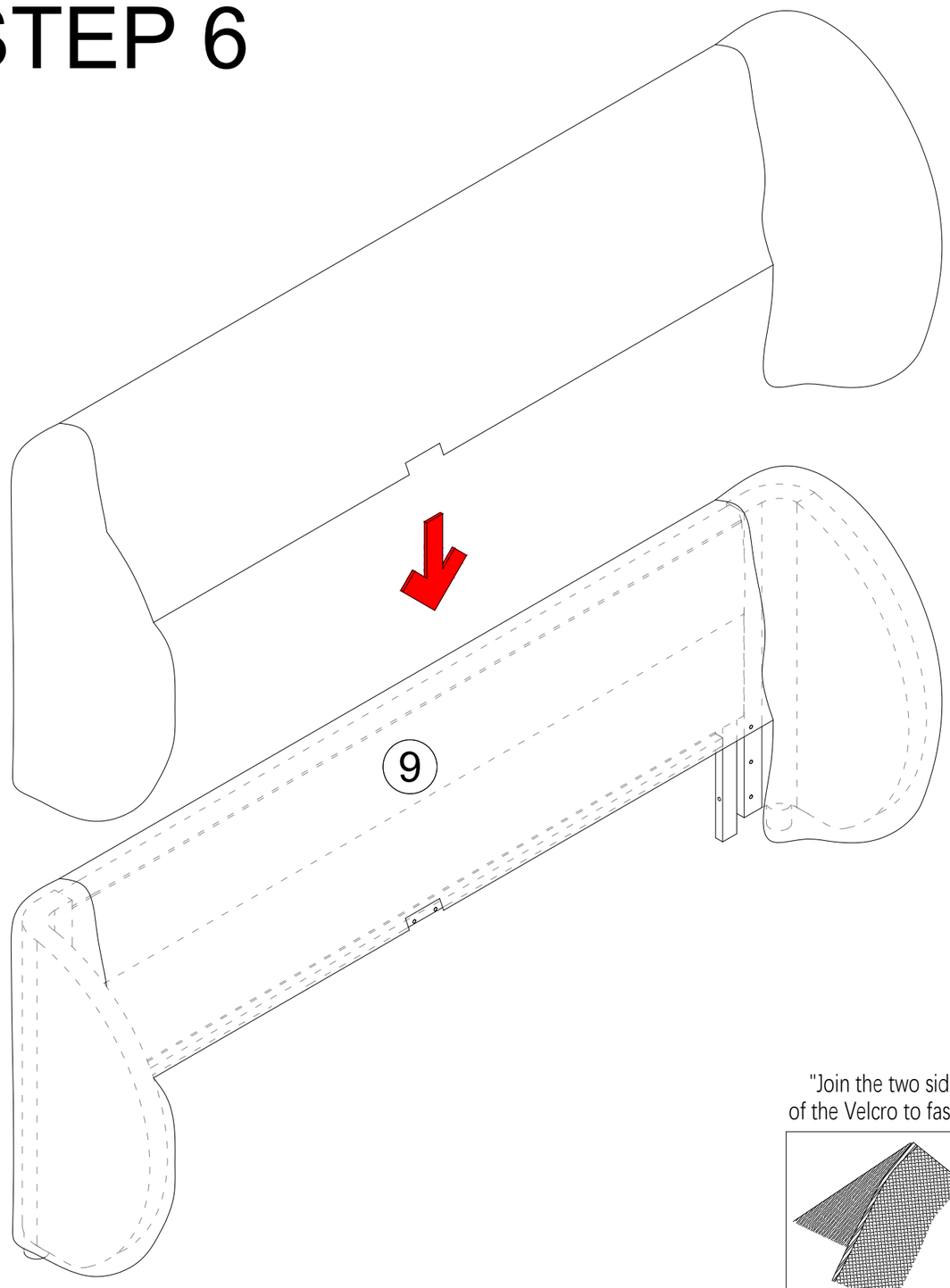

"Join the two sides
of the Velcro to fasten."

STEP 7

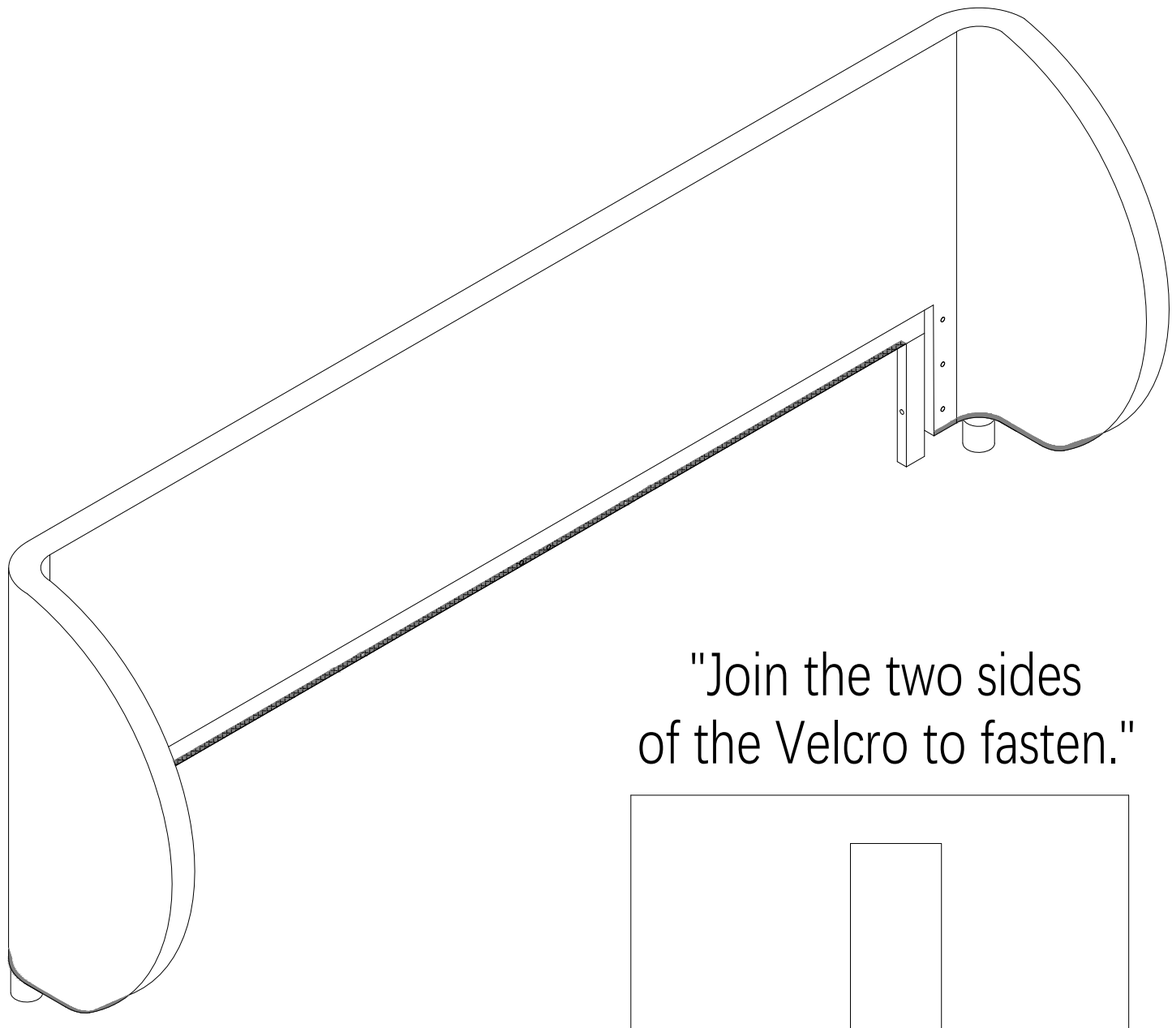

"Join the two sides
of the Velcro to fasten."

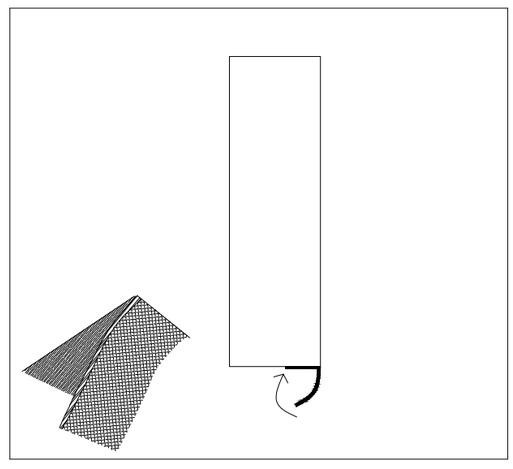

ASSEMBLY INSTRUCTIONS

STEP 8

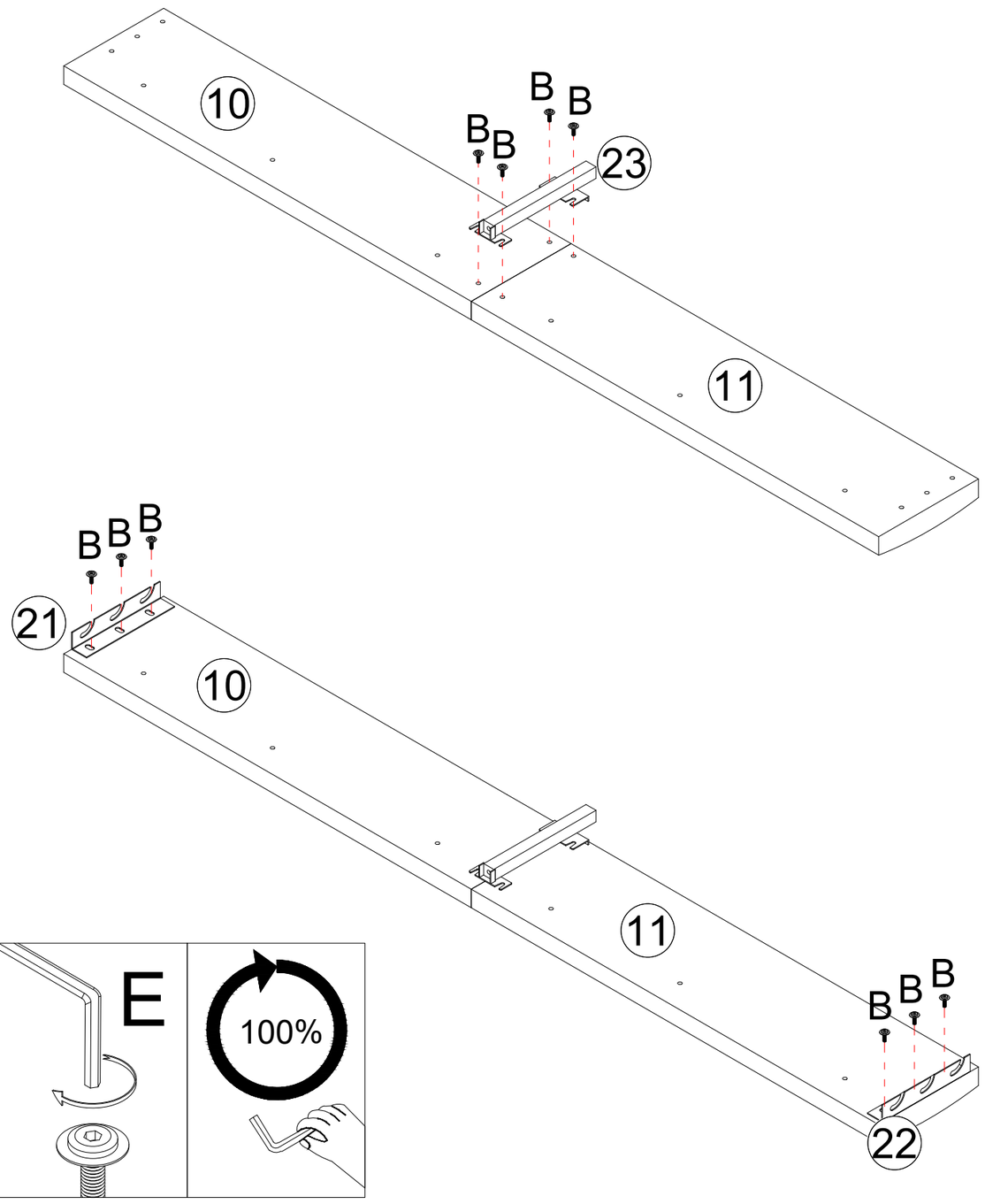

STEP 9

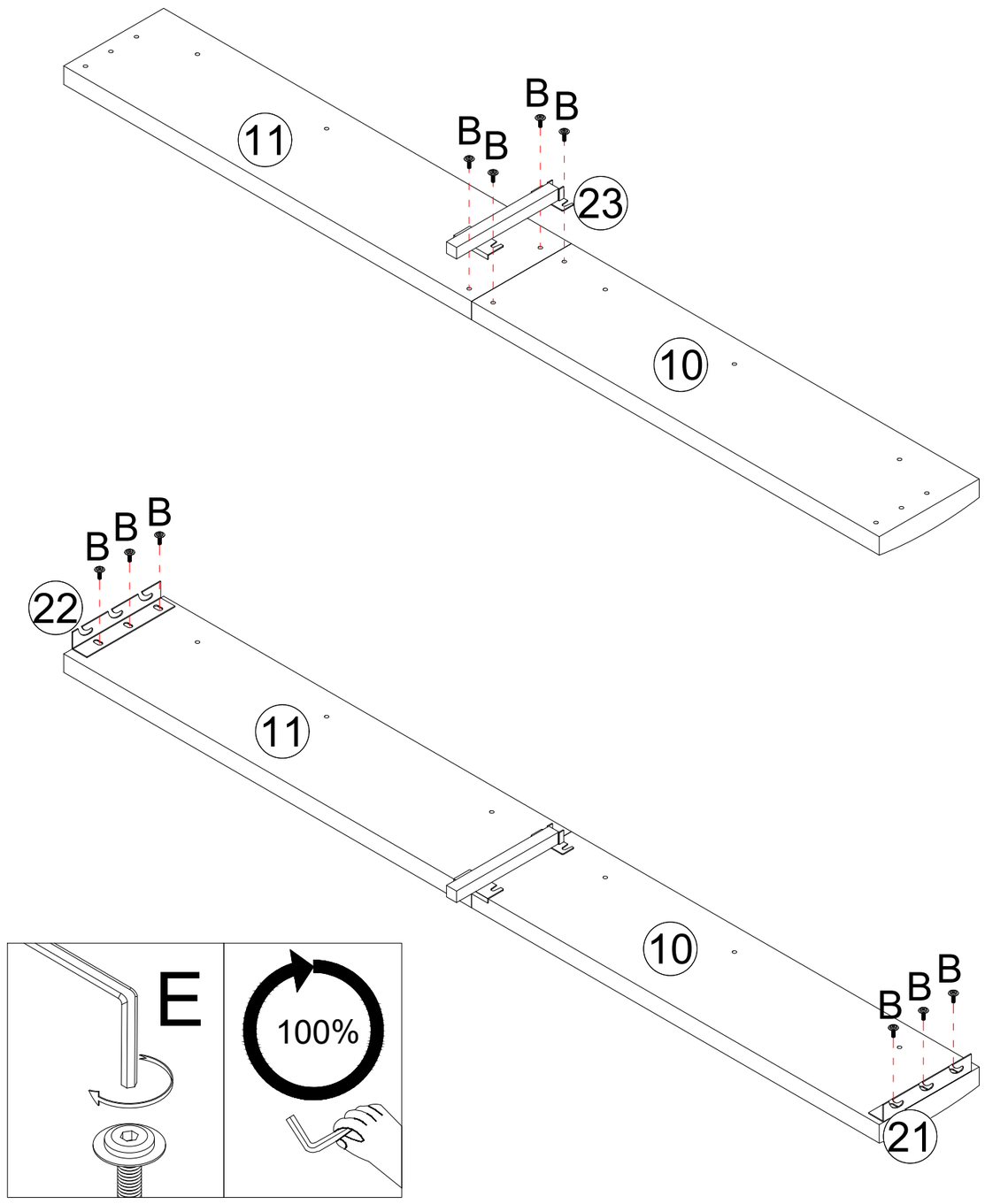

STEP 10

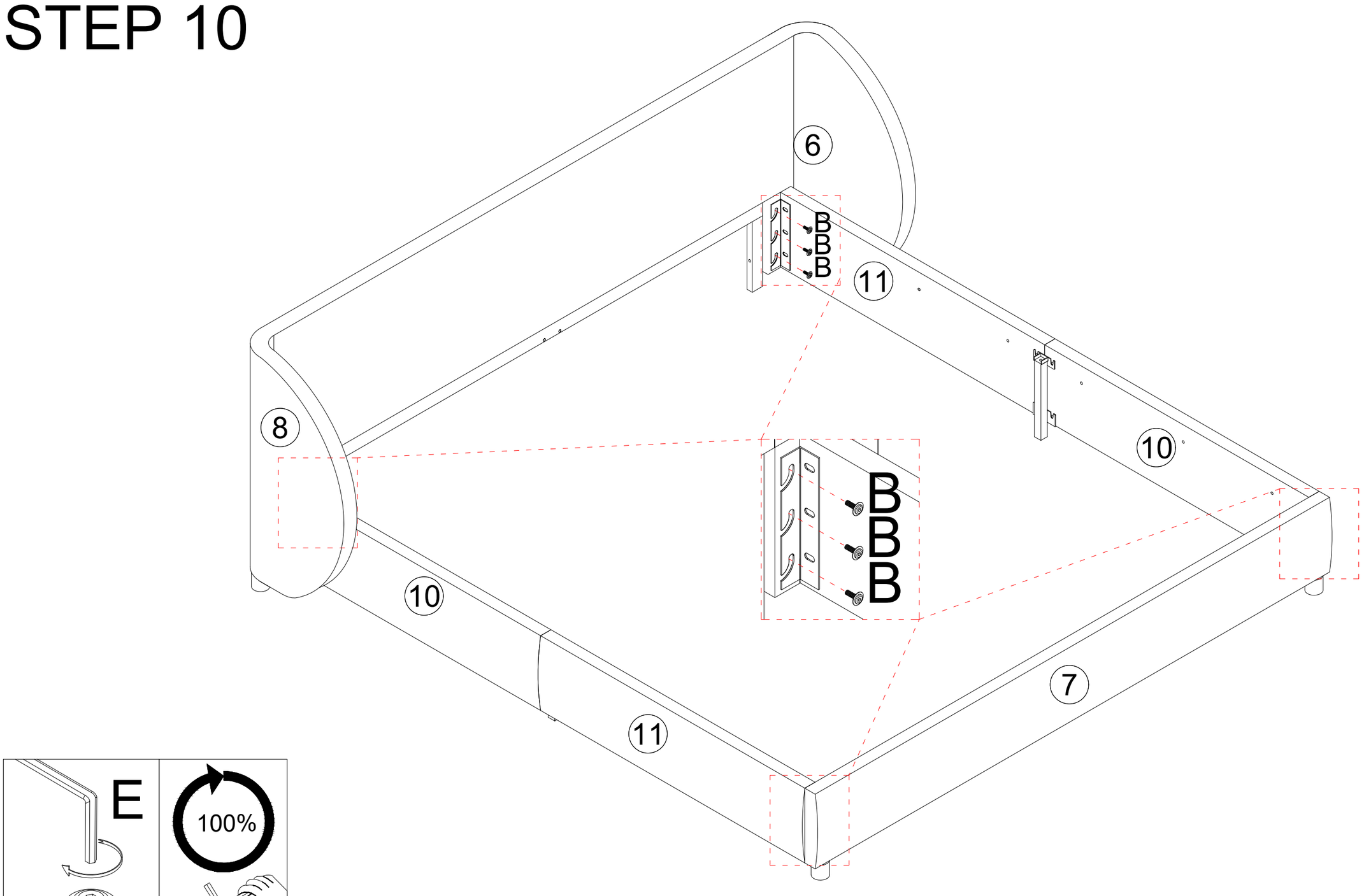

ASSEMBLY INSTRUCTIONS

STEP 11

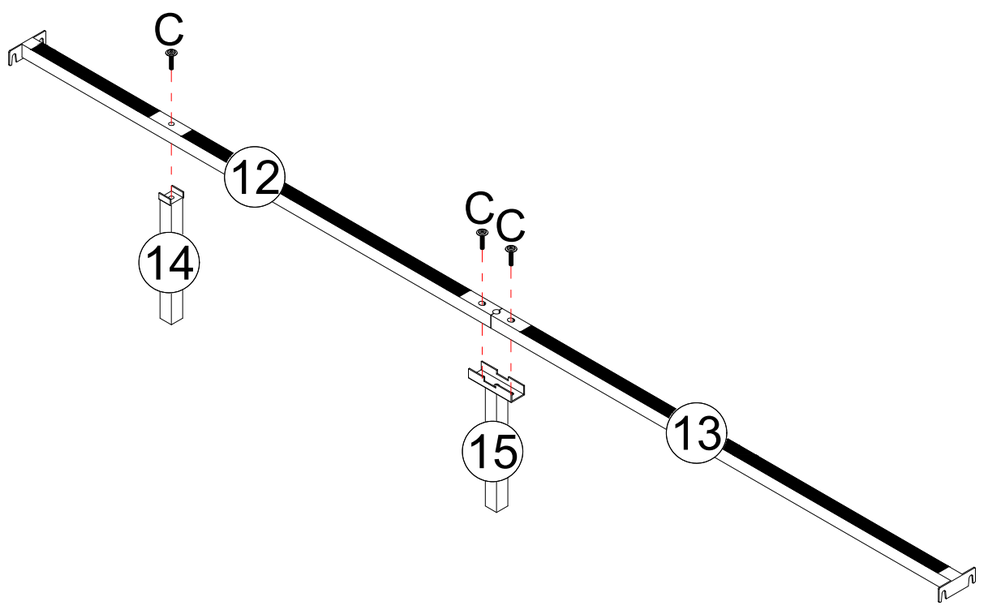

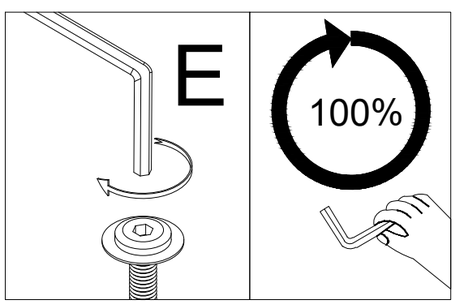

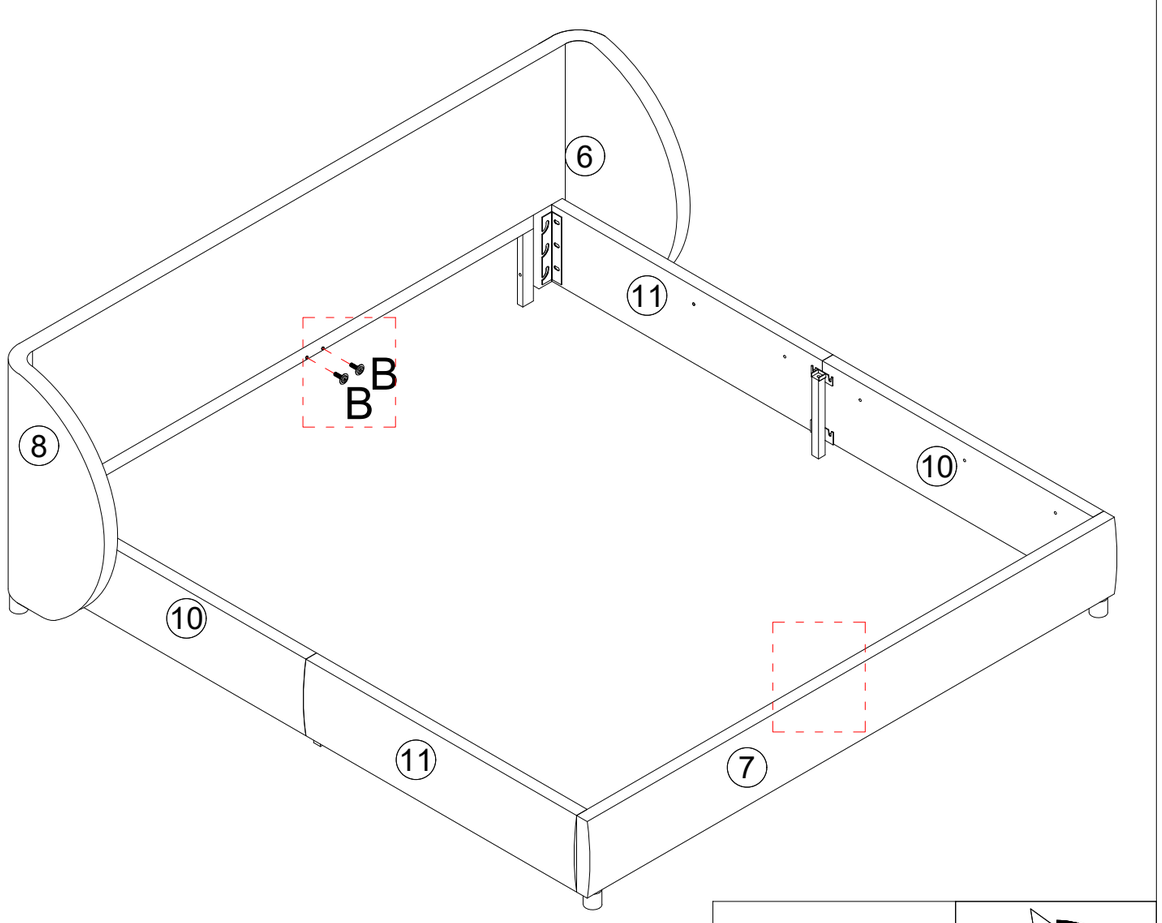

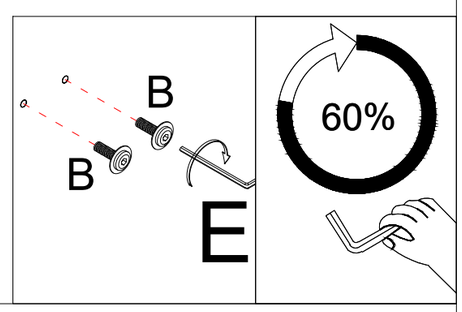

STEP 12

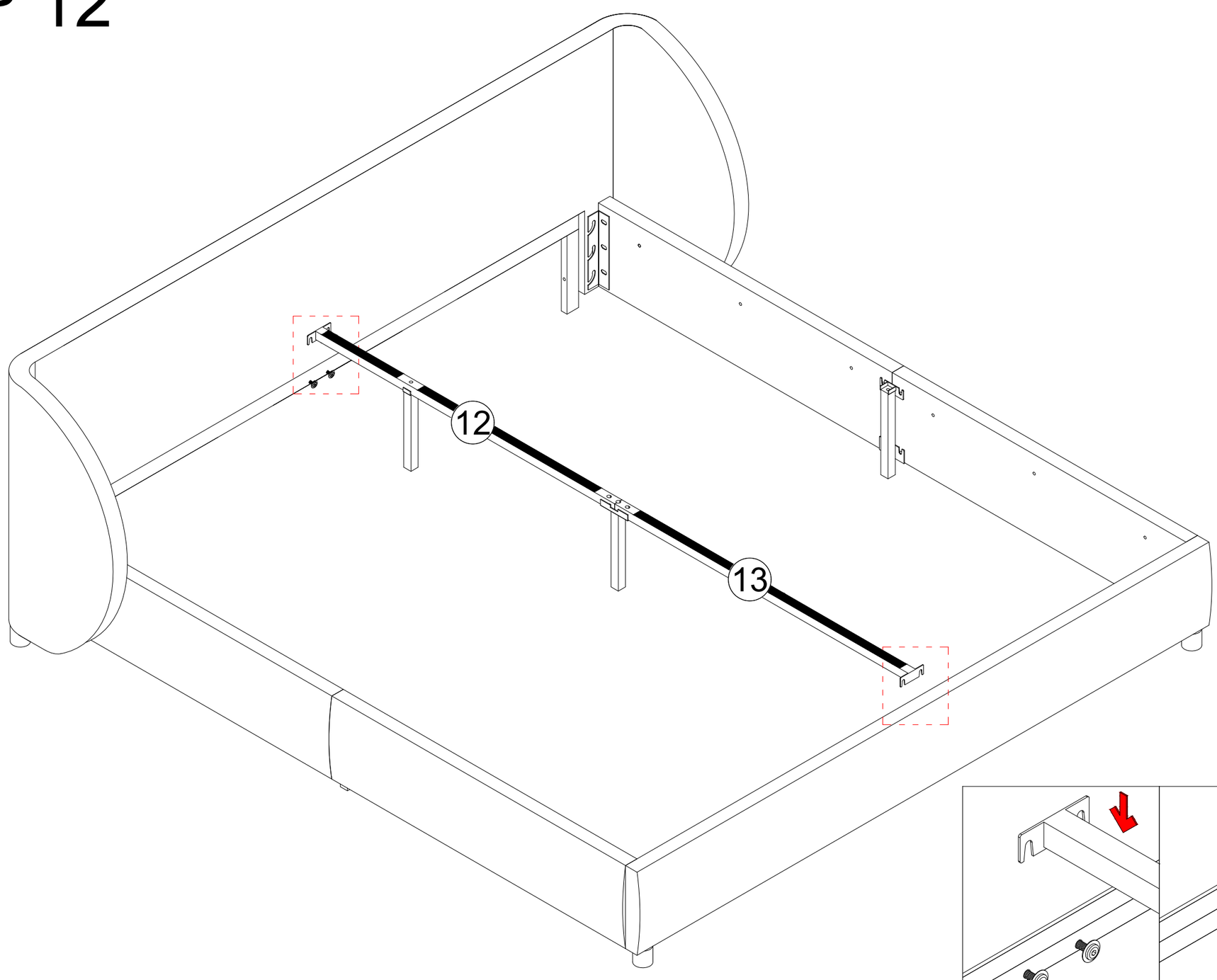

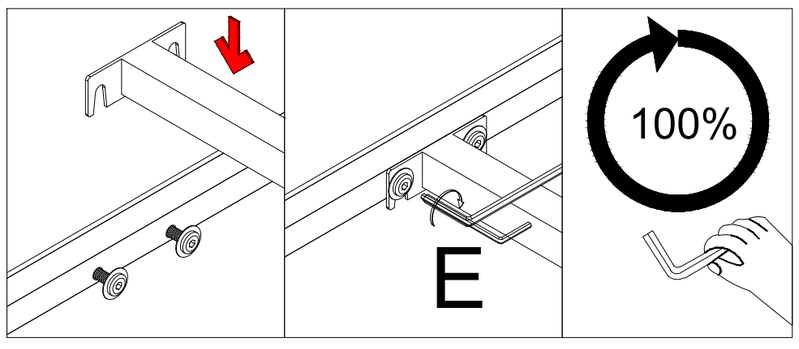

ASSEMBLY INSTRUCTIONS

STEP 13

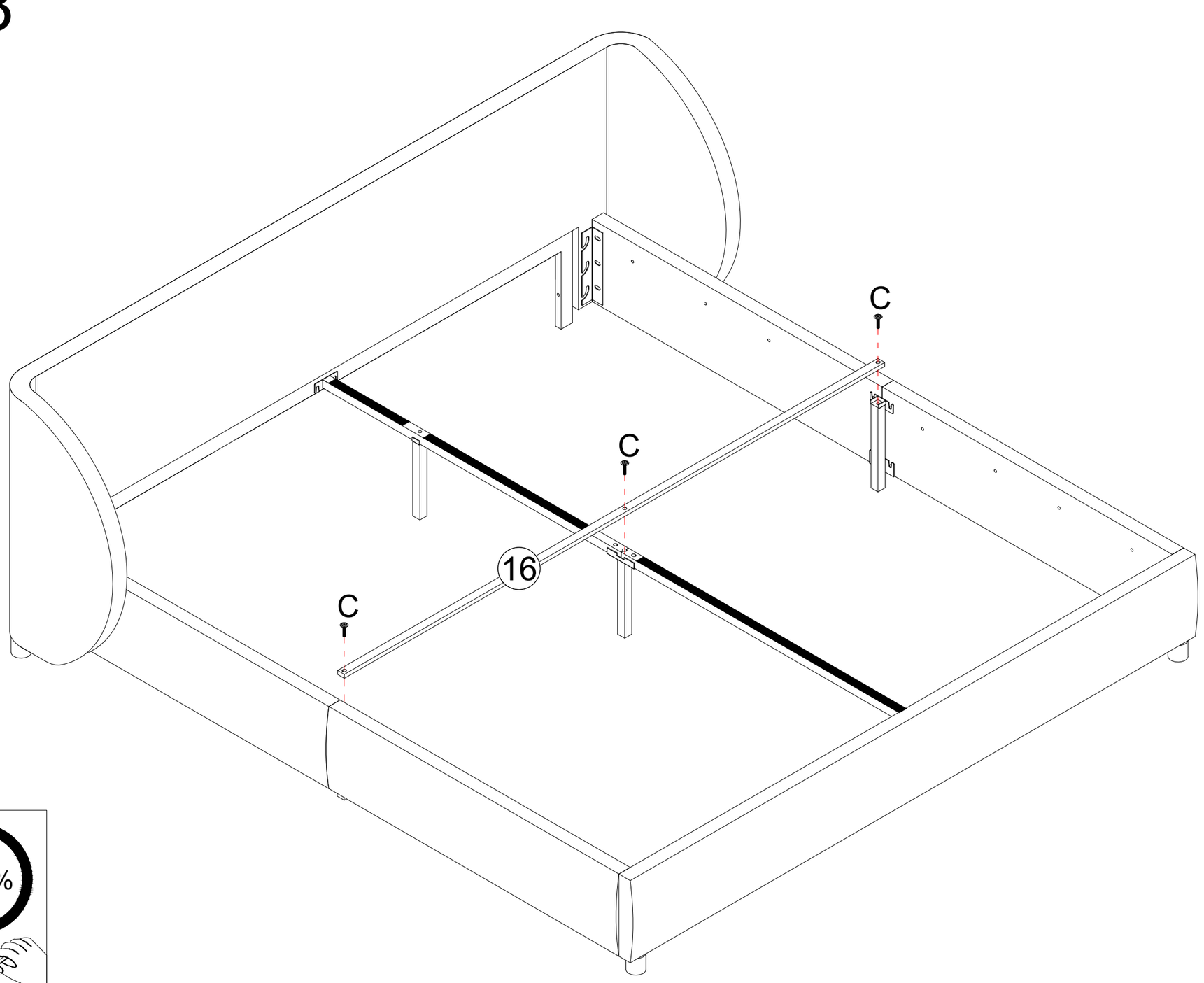

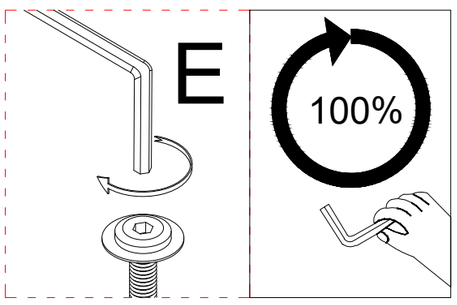

STEP 14

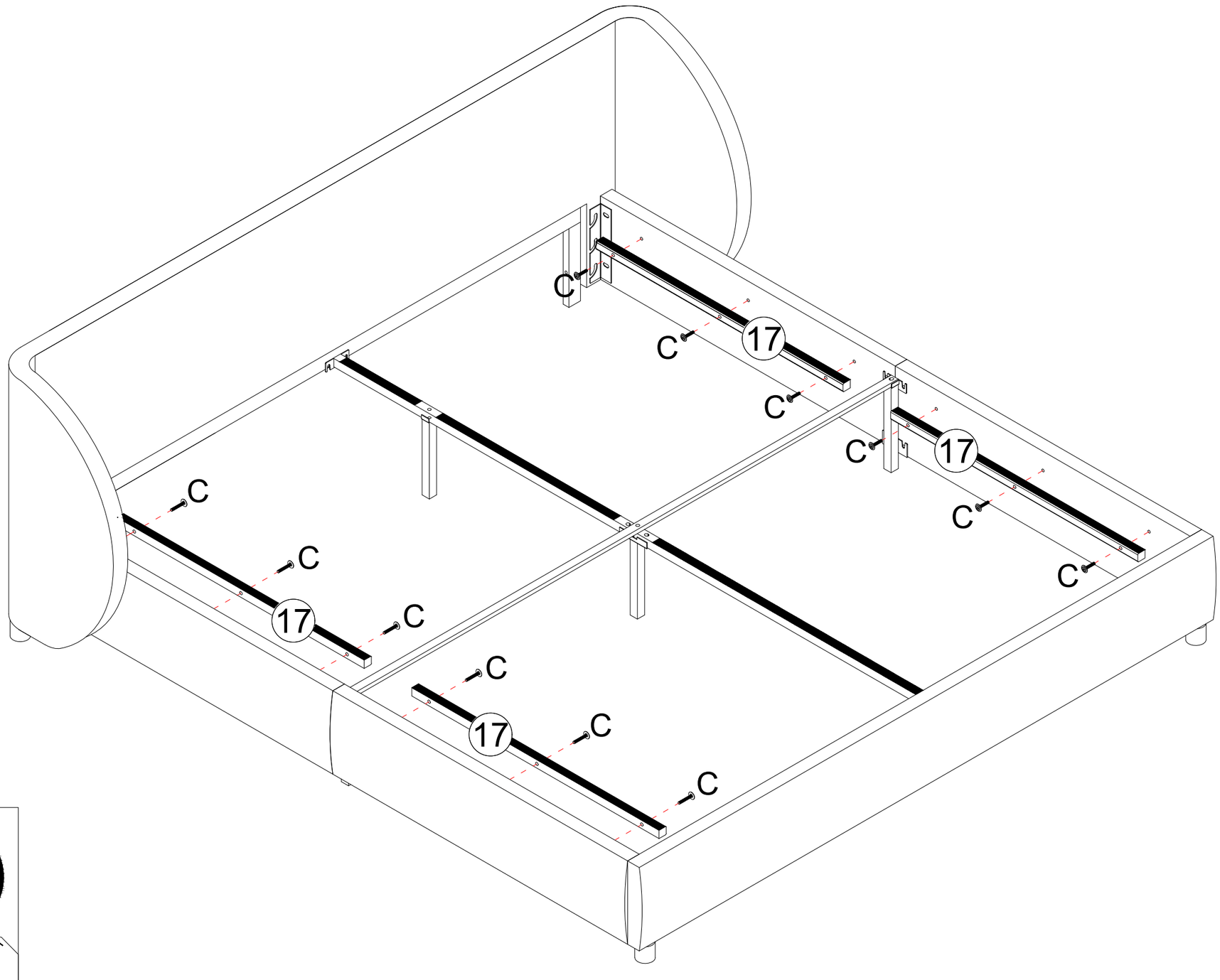

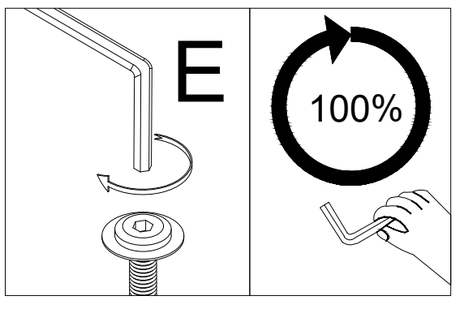

ASSEMBLY INSTRUCTIONS

STEP 15

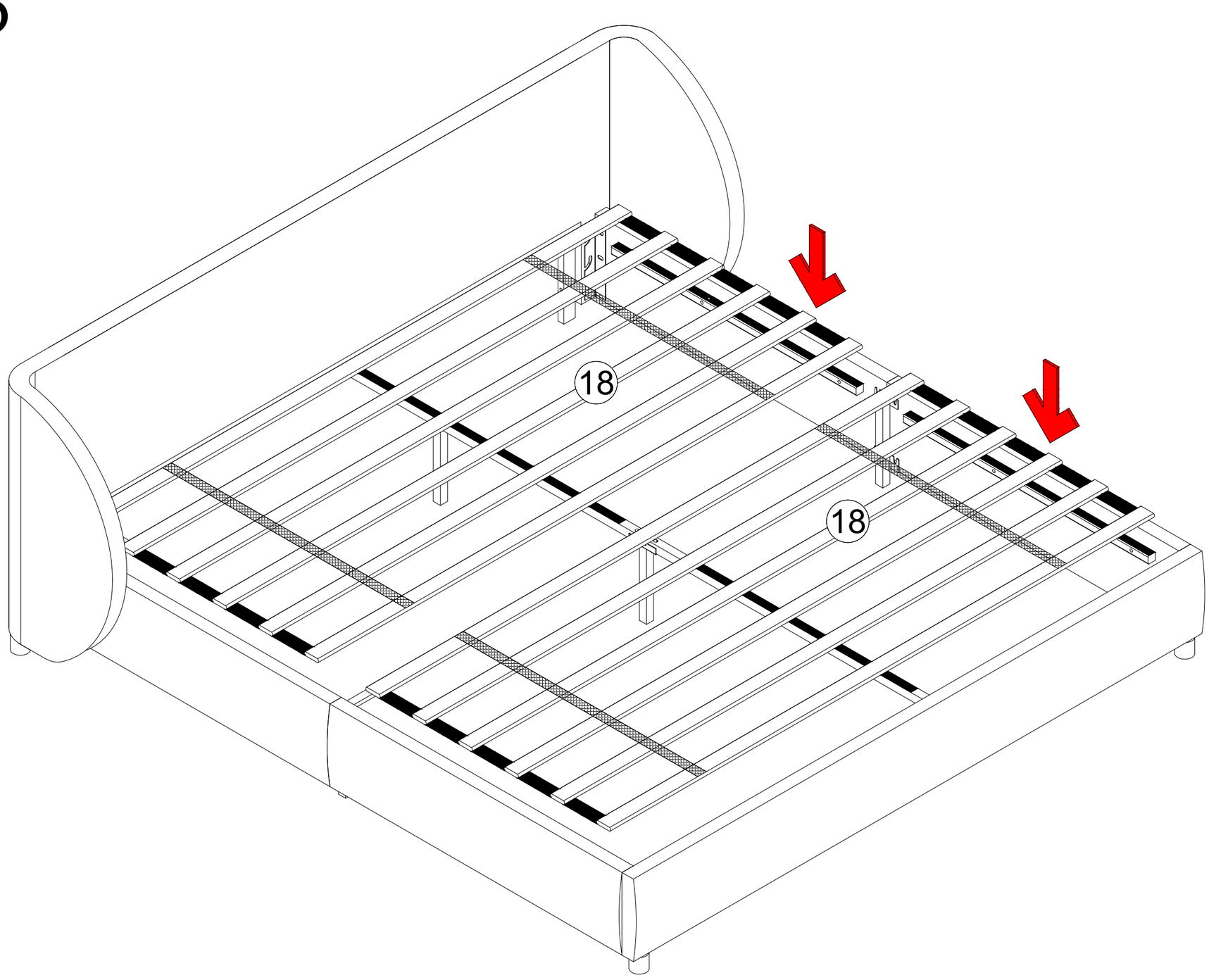

"Join the two sides
of the Velcro to fasten."

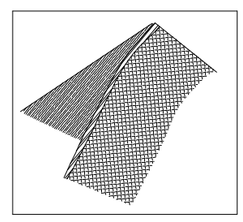

STEP 16

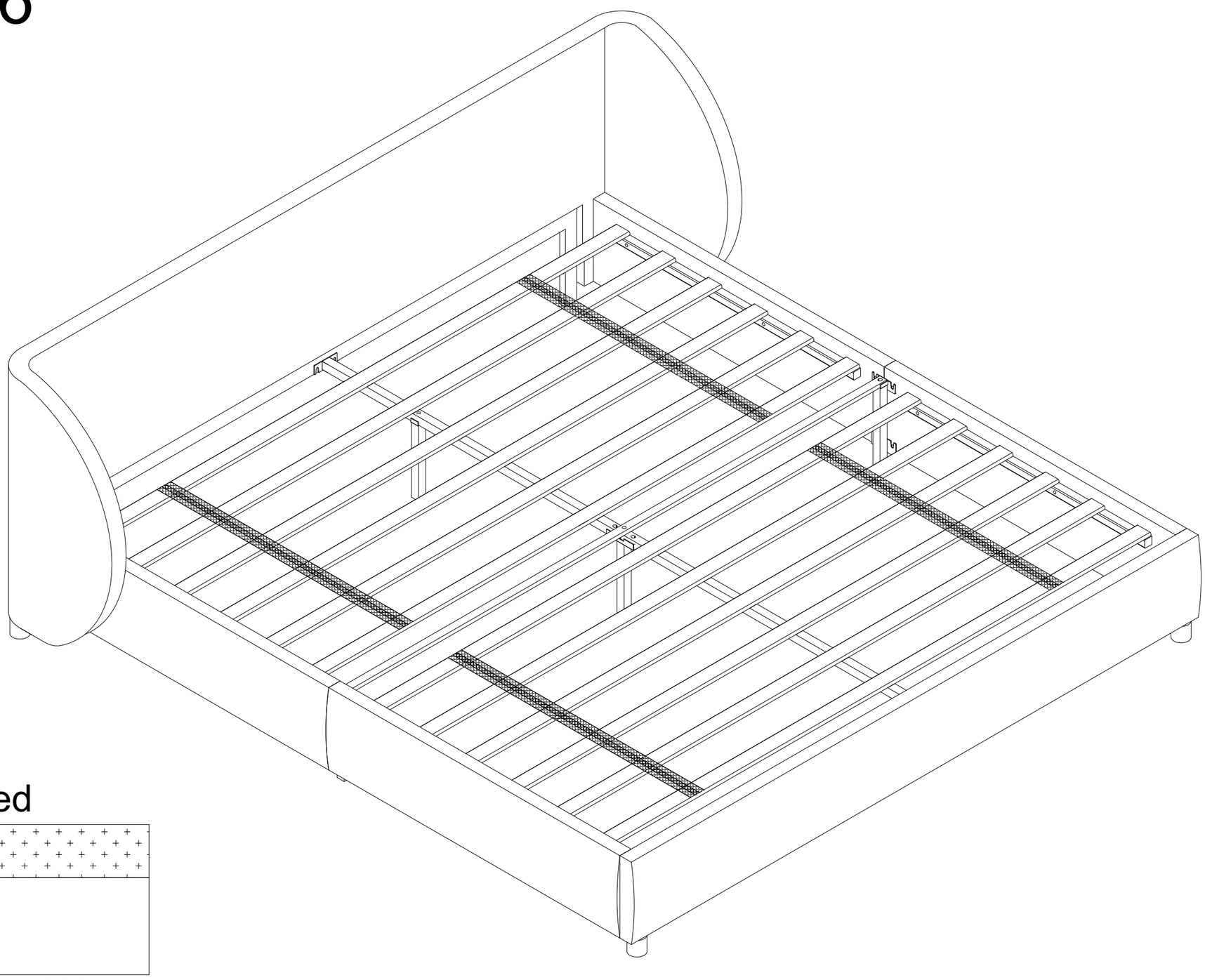

Use Against the Wall