Ax1 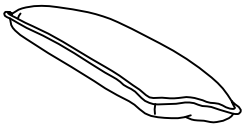	Bx1 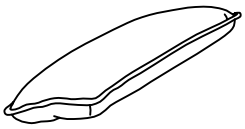	Cx1 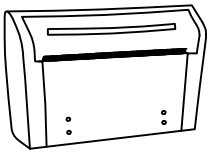	Dx1 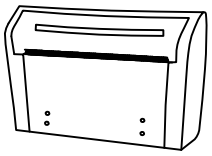	Ex3 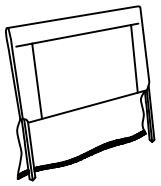
Fx1 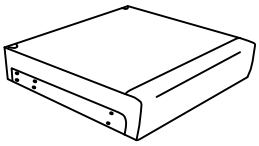	Gx1 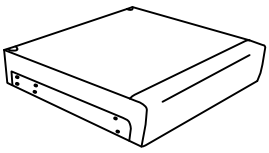	Hx1 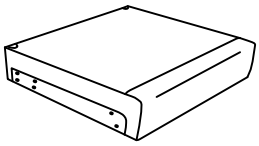	Ix3 	Jx1 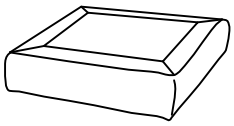
Kx1 	Lx3 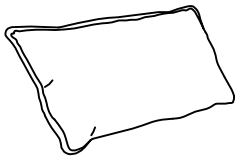	Mx3 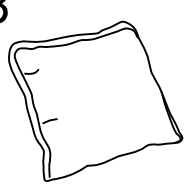	Nx8 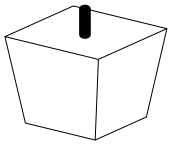	Ox4 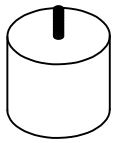
Px2 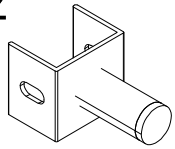	Qx8 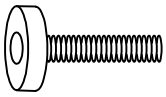 M8(Φ8*70mm)	Rx8 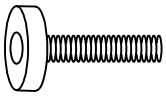 M8(Φ8*60mm)	Sx12 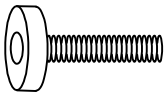 M8(Φ8*40mm)	Tx28 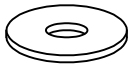 M8
Ux8 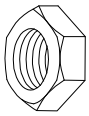 M8	Vx1  M5	Wx1 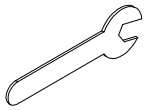		

Step1:

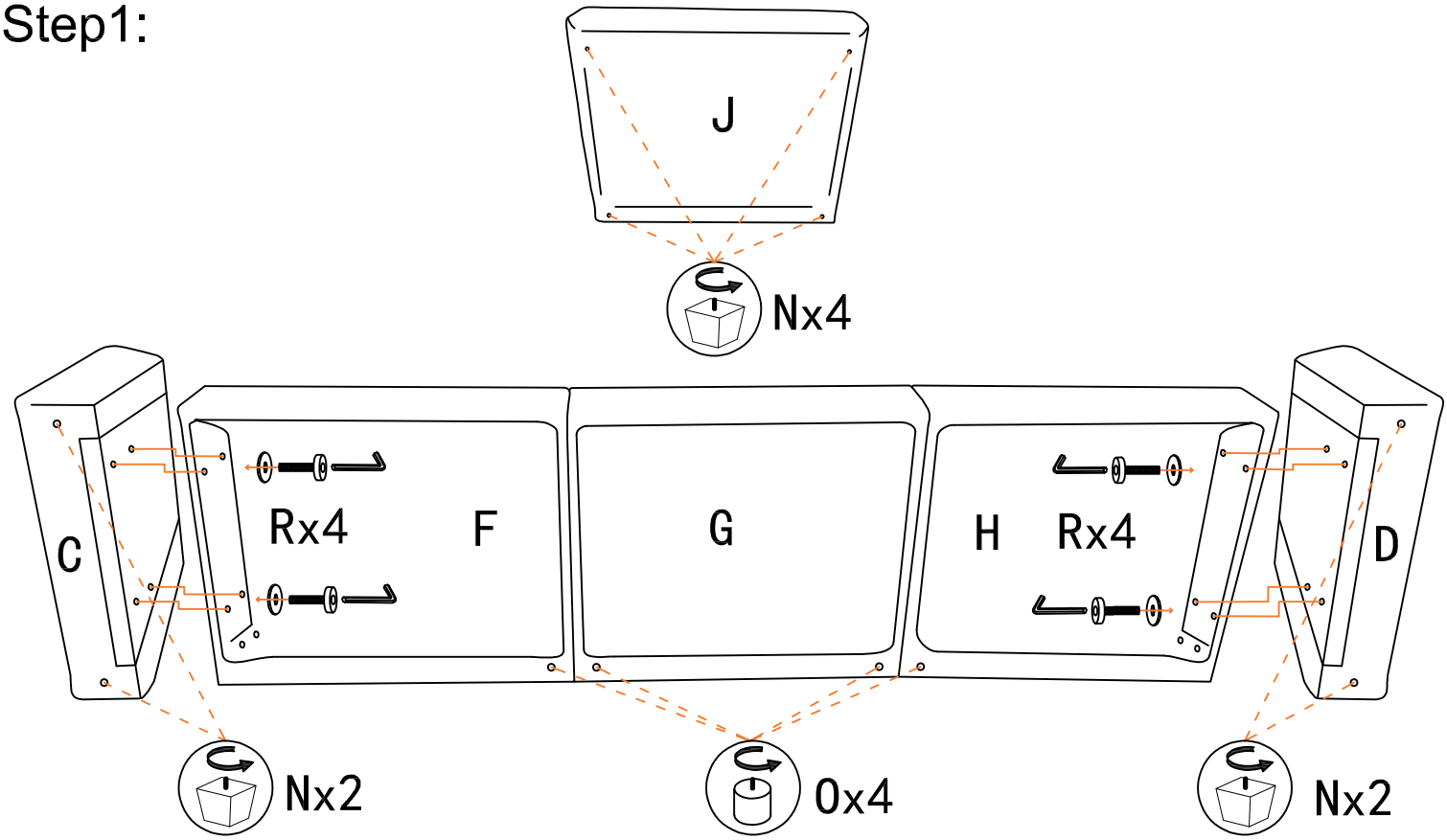

Step2:

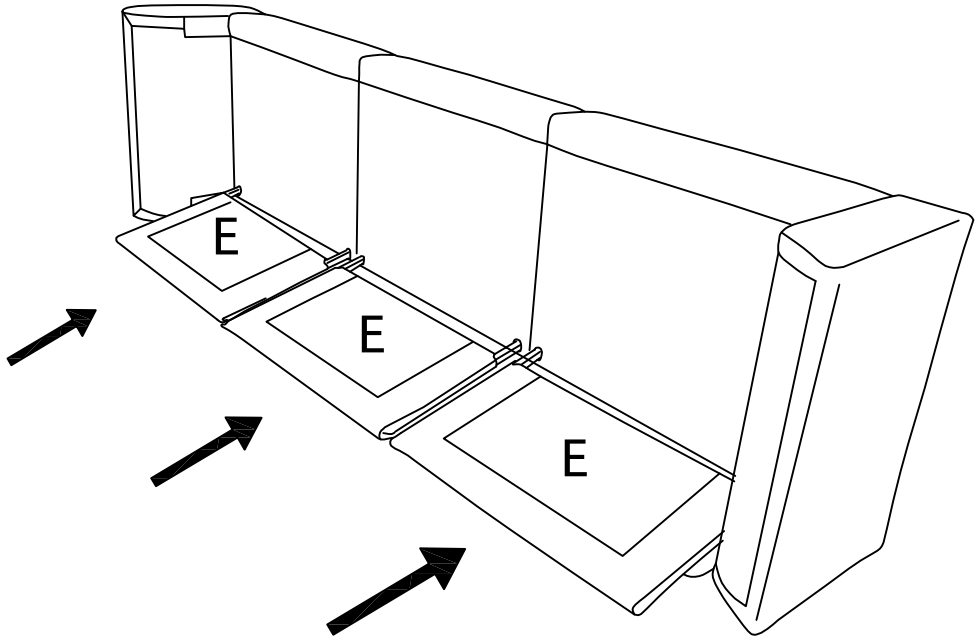

Step3:

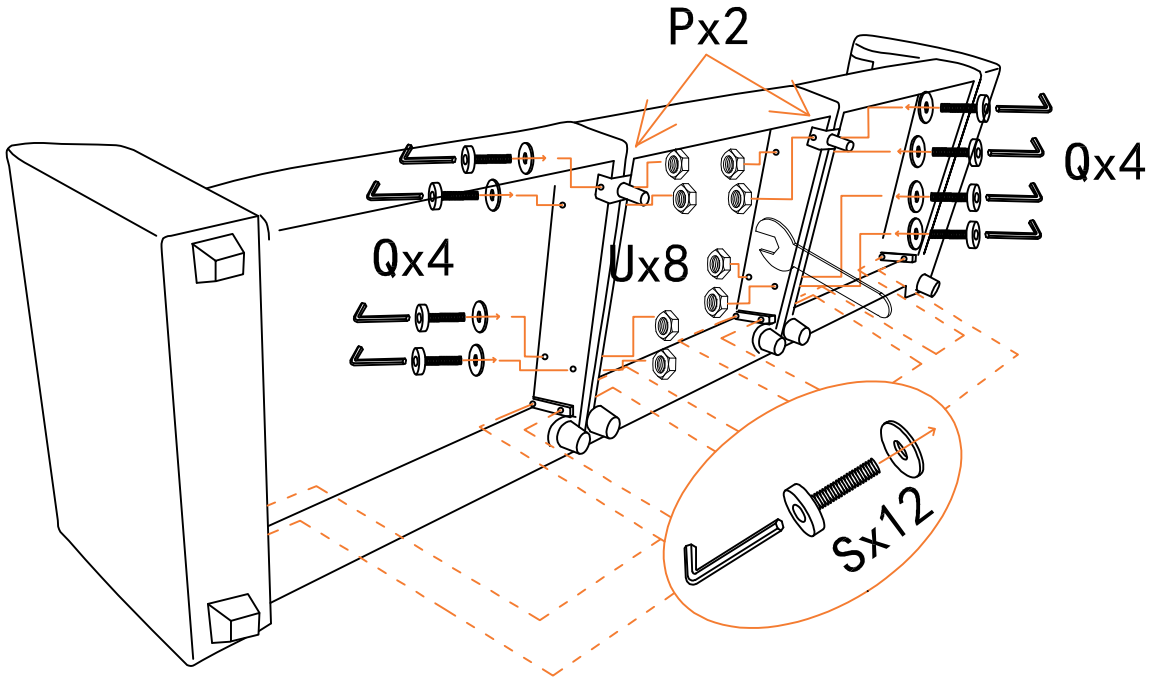

Step4:

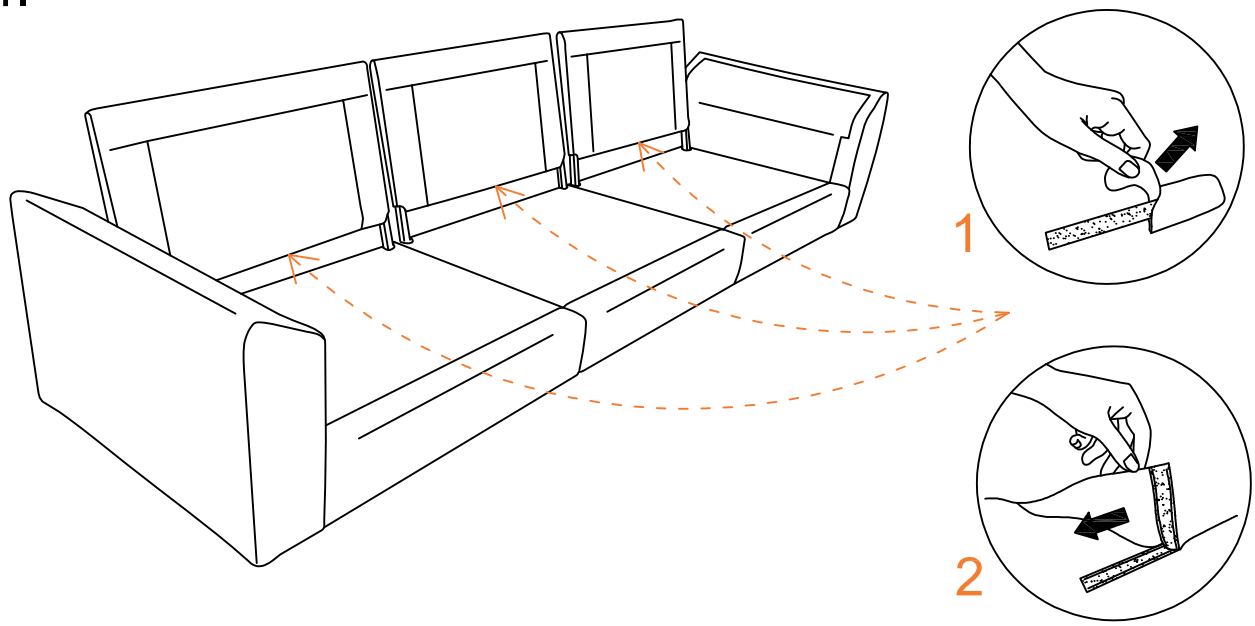

Step5:

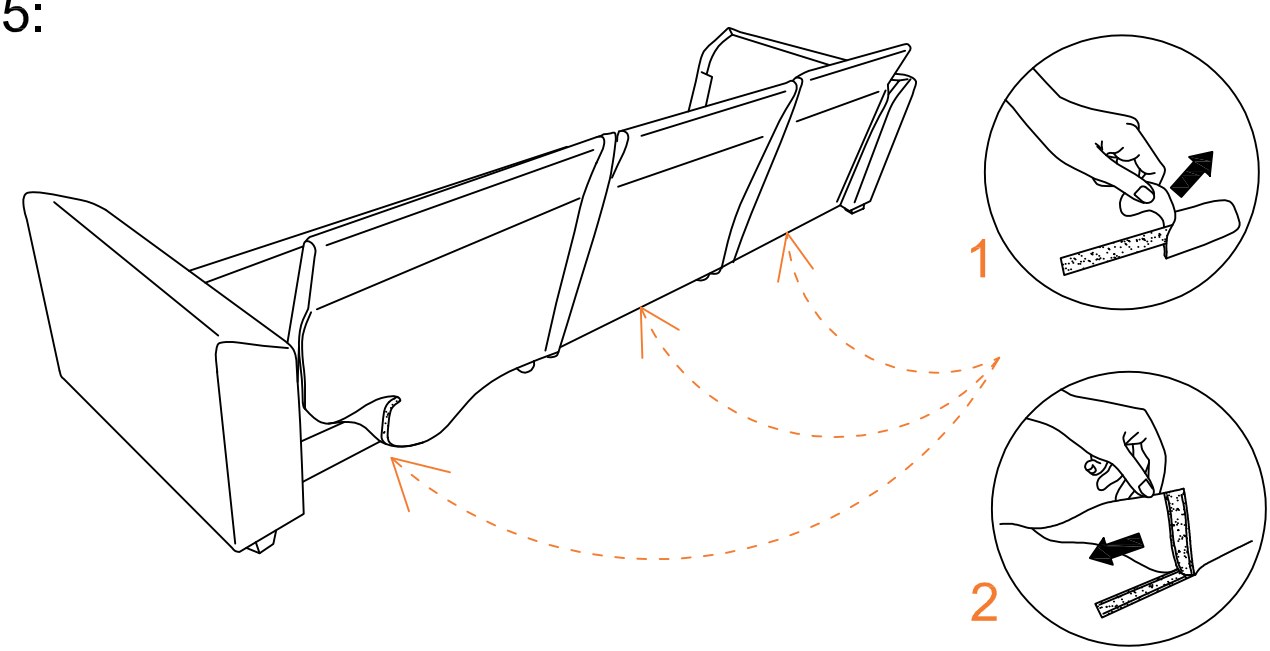

Step6:

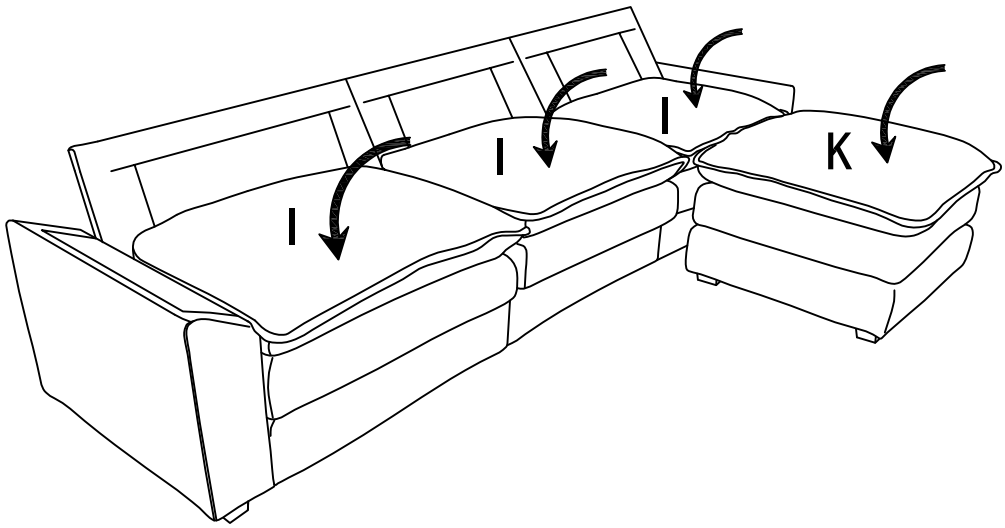

Step7:

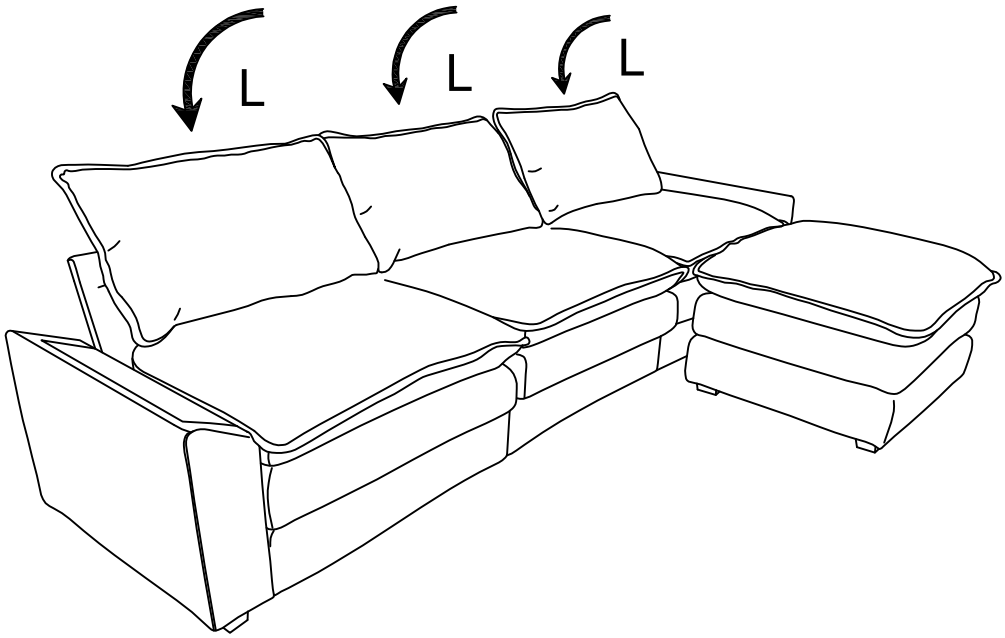

Step8:

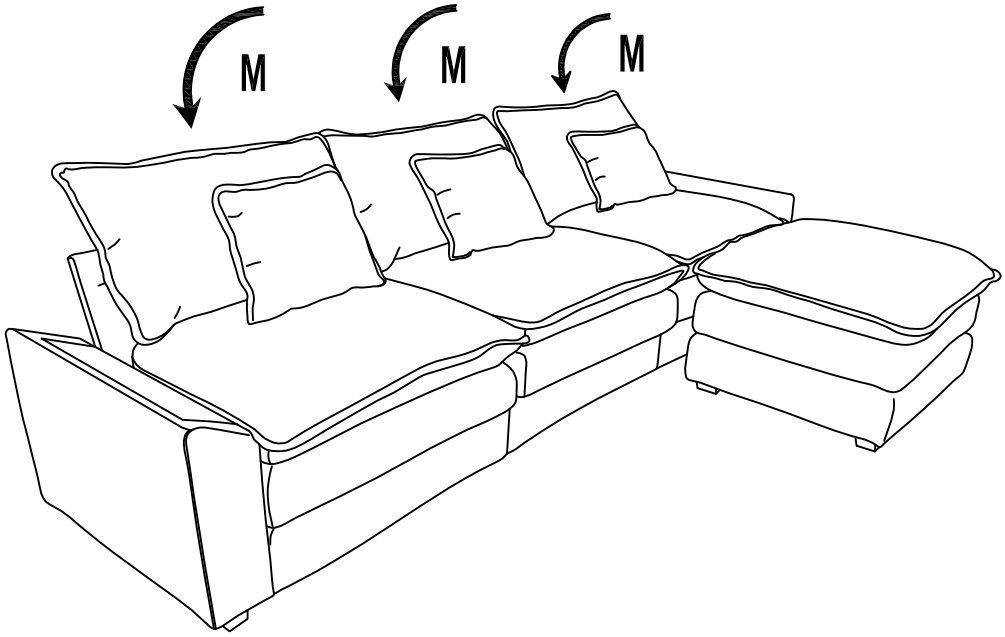

Step9:

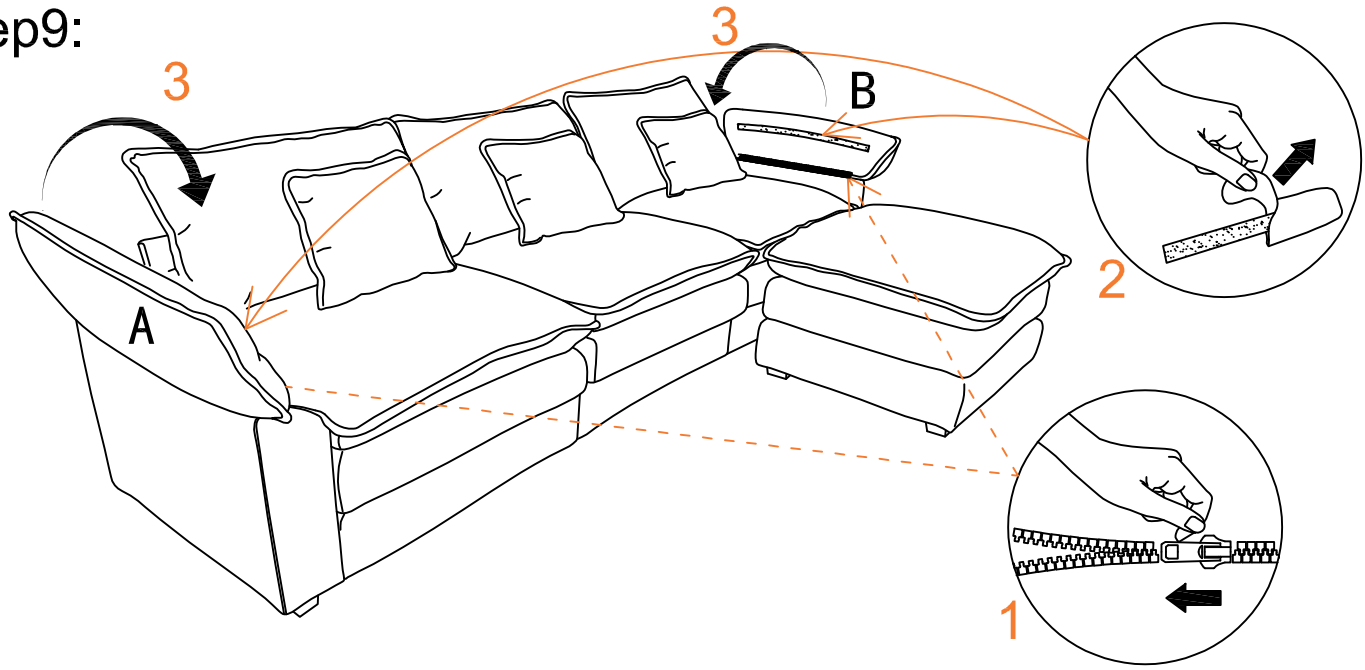

Step10:

