# Dining Chair

## Assembly Guide

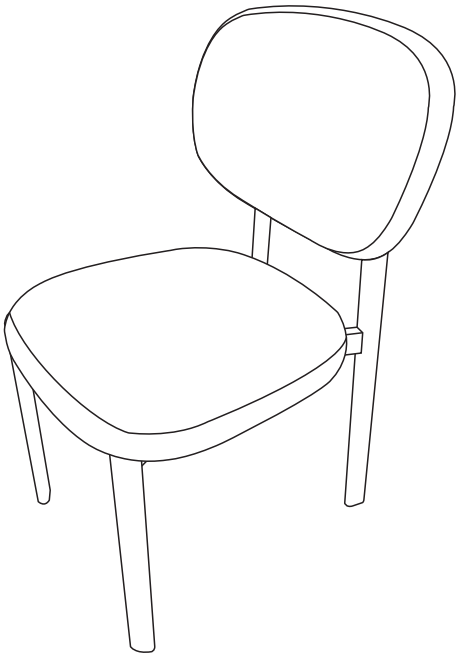

**IMPORTANT**: please read these instructions fully before starting assembly



SAFETY AND CARE ADVICE



NO POWER TOOLS

- Check you have all the components and tools listed
- Remove all fittings from their bags and separate into groups
- We do not recommend use of power tools - this could damage the unit. Only use hand screwdrivers and Allen keys
- Keep children and animals away from the work area, small parts could cause choking if swallowed
- Make sure you have enough space to lay out the parts before starting
- Assemble the item as close to its final position (same room) as possible
- Do not over tighten the nuts to avoid damage to the threads
- Only clean using a damp cloth and mild detergent. Do not use bleach or abrasive cleaners
- From time to time, check there are no loose screws in this unit
- This product should not be discarded with household waste. Take to your local authority waste disposal centre
- Unless otherwise stated, this product is designed for domestic use and is not certified for commercial or contract settings.

## IMPORTANT INFORMATION



20 Minute Build



Two Person Build




Max Weight Capacity 120kg

**Note**: Assembly estimates are approximate and can differ based on the specific environment and user experience.

## WHAT'S IN THE BOX

**Note**: the quantities are the correct amount to complete the assembly. In some cases more fixings may be supplied than are required.

| Label | Part Name | Drawing | Quantity |
|---|---|---|---|
| 1 | Rear leg |  | 1 |
| 2 | Front leg |  | 1 |
| 3 | Chair Seat |  | 1 |

| Label | Hardware Description | Drawing | Size (mm) | Quantity |
|---|---|---|---|---|
| A | Washer |  | M6 x 16 | 8 |
| B | Screw |  | M6 x 40 | 2 |
| C | Screw |  | M6 x 60 | 6 |
| D | Allen Key |  | M5 | 1 |

Note:

- Use a clear, flat surface to avoid bumps or scratches before assembling.
- Insert all fixings loosely at first to allow for alignment; only tighten them once everything is properly positioned, as some adjustment may be required.
- Avoid over-tightening, as this may damage the parts.
- Seek assistance when moving large or heavy parts

## STEP 1

Carefully align the legs together and secure with 2x washers [A] followed by 2x screws [B] and loosely tighten with Allen key [D].




| | | |
|---|---|---|
| A |  | X2 |
| B |  | X2 |
| D |  | X1 |

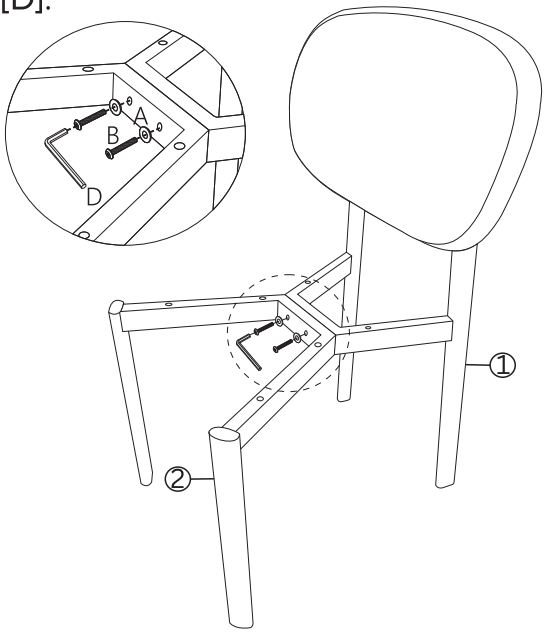

## STEP 2

Attach the chair seat [3] to the legs [1 , 2]. You may find it easier using the edge of a table to assist. Align the pre-drilled holes and secure the chair seat using 1x washer [A] + 1x Screw [C] per hole (4 of each in total). Tighten with Allen key [D].

Fully tighten all screws [B] in step 1 and screws [C] in step 2.

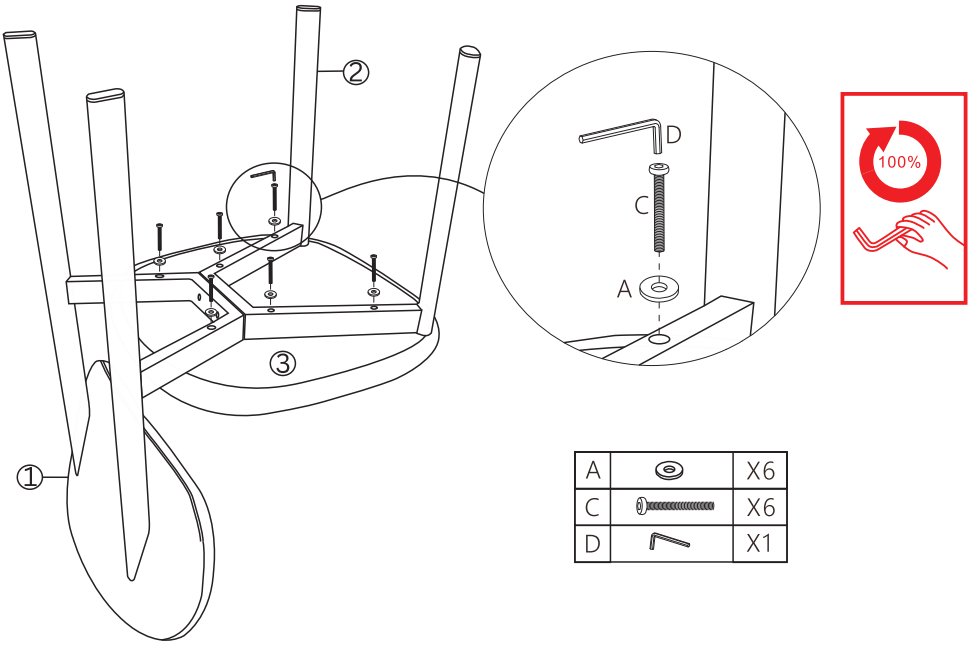


| | | |
|---|---|---|
| A | | X6 |
| C | | X6 |
| D | | X1 |

## STEP 3

Carefully, and with help, place the chair on its feet and check for stability.

Your new chair is ready to use!

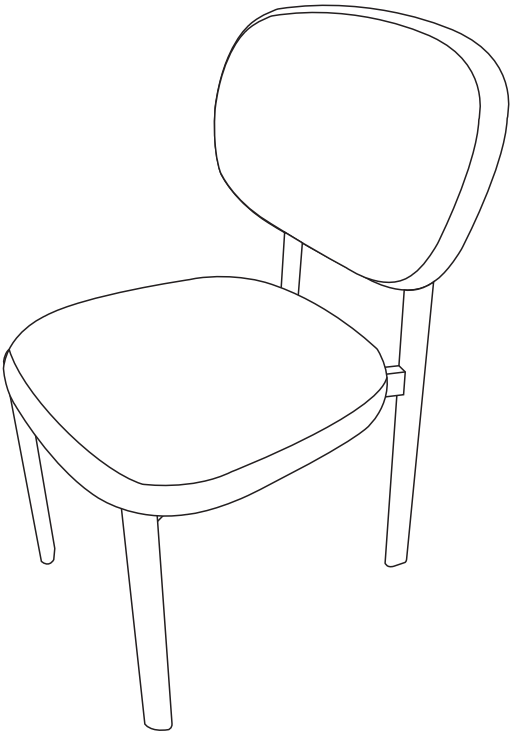

**Please ensure any and all fixings and fittings are FULLY tightened before using this product**

# our 2 year GUARANTEE

Our products come with a 2 year guarantee, giving you extra peace of mind when shopping with us!

## What the guarantee covers

**PRE-INSERTED FIXINGS**
e.g. loose metal threads

**FAULTY JOINTS**
e.g. legs bending

**EXTERNAL FIXING FAULTS**
e.g. metal discs removing from table top

**STRUCTURAL INTEGRITY**
e.g. the frame of the product