OWNER'S MANUAL

LIFT RECLINER

PURCHASER'S AGREEMENT

By accepting delivery of this product, you promise that you will not change, alter, or modify this product or remove or render inoperable or unsafe any guards, shields or other safety features of this product.

You will not refuse or neglect any retrofit kits that MCombo may provide to enhance and preserve the safe use of this product.

CONTENTS

I **SAFETY GUIDELINES** - 01
- Mandatory
- Danger
- Warning
- Symbols information
- Disclaimer

II **ASSEMBLY INSTRUCTIONS** - 04
- Product Parameters
- Part List
- Assembly Steps

III **OPERATING INSTRUCTIONS** - 11
- Operation Precautions
- Lift Operation Instruction
- Massage Remote Operation Instruction

IV **CARE AND MAINTENANCE** - 14
- Fabric Care
- Faux Leather Care
- Electronics Care
- Disposal & Recycling

V **TROUBLESHOOTING** - 16

VI **DISASSEMBLY INSTRUCTION** - 23
- Disconnect all Connections
- Disassemble Backrest
- Disassemble Armrests

VII **WARRANTY** - 25

VIII **RETURN / REPLACEMENT POLICY** - 26

IX **MCOMBO CUSTOMER SUPPORT** - 27

I. SAFETY GUIDELINES

1. Mandatory

Read the safety and other instructions thoroughly before using your MCombo® product. Failure to follow the guidelines, warnings in this manual and those located on your product can result in personal injury or product damage and will void the product warranty. Keep this manual for future reference.

2. ⚠ Danger

- To prevent suffocation, keep plastic bags away from children.
- Do not allow children play on or near the chair when in use. Serious injury or death could occur if a child is under the chair when the chair is in motion.
- Keep cord out of reach of small children, and do not use where it may be a trip hazard.
- Plug directly into a wall outlet. Do not use an extension cord or adapter.
- Avoid exposing upholstered chair to burning cigarettes or cigars, open flames, and high temperatures.
- Do not use this product if it is wet, in water, around water or any liquid.
- Always leave in an upright and closed position. Keep hands and feet clear of mechanism and all moving parts. Footrest must be completely closed before getting in or out of the chair. Only the occupant should operate the chair.
- Before moving the product, disconnect the electrical plug from the wall outlet and secure the mechanism to prevent unexpected lifting and movement of the chair.

3. Warning

- Weight Capacity: 350 lbs.
- Do not use outdoors. INDOOR USE ONLY.
- To avoid tip over, do not put your weight against the back of the chair.
- Do not stand, sit, or place extra weight on the arms, back or open footrest.
- Do not use this product if it is damaged. Do not use attachments or substitute parts.
- Do not use this product if you have poor circulation, are mobility-impaired, or cannot sense heat, except as directed by your health care provider.
- Do not operate the unit until the back is installed and locked.

- Do not attempt to disassemble or repair the actuator or pump; no serviceable parts are inside.
- Do not allow electrical cord to be pinched between moving parts or between the frame and the floor. Do not place cord under carpet or in a location where it could become worn.
- Do not use pillow, blanket, or other cover between occupant and chair surface when heat is engaged.
- Do not attempt to disconnect the power plug by pulling the power cord. Always hold the power plug and pull it out.
- Closely supervise children and disabled persons using this product.
- To reduce the risk of head entrapment and other injuries, keep children and pets away from openings and moving parts in and around furniture.
- Unplug power cords from outlet before relocating or troubleshooting.
- This product has many moving parts, serious injury can occur if not used properly. Keep hands, fingers, and body parts away from the mechanism.
- To exit the unit safely and prevent a tripping hazard, bring the back upright and close the footrest.
- Place tables and area rugs at a distance to allow the footrest to fully extend without rubbing or interference.
- Check the condition of the power supplies, electrical cords, plugs, and connectors often. Keep the power supplies and electrical cords away from heat sources. Never operate the unit with a damaged power supply, electrical cord, plug or connector.
- This product is not intended for use as a health care device. Some medications and physical limitations may impair your ability to operate this product in a safe manner. Consult your physician if you are taking prescribed or over the counter medication, or if you have physical limitations.
- Do not charge your device into the USB charge ports over 24hours.
- Do not charge any devices over 5V/2A with the USB charge ports.
- Do not overlay the USB charge ports with other heat-dissipating electronic products. This may prevent heat dissipation and cause overheating or melting.
- Users of medical devices should contact their health care provider before using this product.
- Unplug the power cord immediately if you detect strange odors or fumes coming from the chair. Contact your MCombo Customer Support.
- Burns may result from improper use and care of internal heating parts. To avoid risk of burns, do not use pins, do not allow heating pad area to become wet, and do not remove upholstery cover.
- The chair is intended for a single occupant, not exceeding 350 pounds. Do not operate the chair with more than one occupant in or on any part of the chair.
- If you give this product to someone else, must include this owner's manual.

4. Symbols Information

The symbols below represent labels used on the product to identify warnings, mandatory actions, and prohibited actions. It is especially important for you to read and understand these symbols completely. Do not remove these labels from your product. Please note that not all the symbols may be used on your chair.



Read and follow the information in the owner's manual



Weight capacity: 350 lbs



Do not connect an extension cord to the AC/DC converter



Do not place objects under the footrest when lift chair is in fully reclined position



Do not cover or place the external transformer and other objects under lift chair



Pinch/Crush Points Hazard



Electrical Hazard



Class II Equipment



Indoor Use Only

5. Disclaimer

Make sure that you read this manual completely before assembling and operating your new product. We are not and cannot be held responsible for any damage or injury incurred due to improper or unsafe use of the MCombo Power Lift Recliner. We specifically disclaim responsibility for any bodily injury or property damage that may occur during any use that does not comply with applicable federal, state, or local laws or ordinances.

II. ASSEMBLY INSTRUCTIONS

■ Notice

- Please read these instructions thoroughly before using.
- Do not plug the power supply in until assembly complete.
- Choose a location for the lift chair that is close to an electrical outlet (1 power outlet required).

1. Product Parameters

Specification		Description
Model No		6160-R7070/R7166
Rated Voltage		100~240V
Rated Current		2A
Output Voltage		29V
Reclining Angle		165°
Weight Capacity		350lbs
Package Quantity		3
USB power specifications	Voltage	5V
	Power (Single)	7.5W

2. Part List

Notice

• Use MCombo parts only for all replacements.

Box 1 of 3

A Base x 1

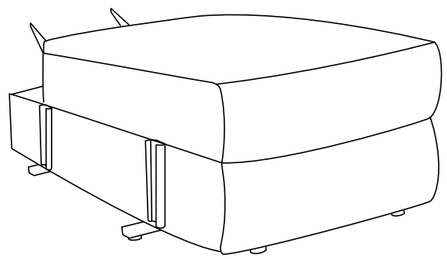

Box 2 of 3

B Backrest x 1

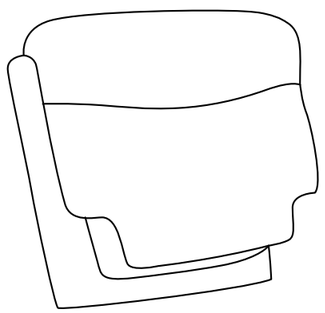

D

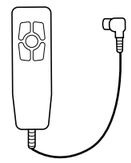

Lift Remote x 1
6160-FF-HLR

E

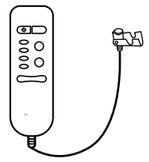

Massage Remote x 1
6160-CC-BM

F

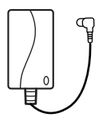

Power Adapter x 1
6160-FF-29V-Angle

G



Anti-back-tipping x 2
6160-SS-BW02

H



Rack circular gasket x 2
(Spare parts)

Box 3 of 3

C1 Right Armrest with USB × 1

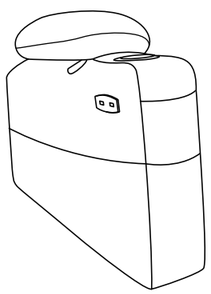

C2 Left Armrest x 1

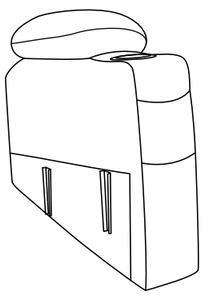

3. Assembly Steps

Step1 - Anti-back-tipping Part Assembly

1. Place the Anti-back-tipping parts (G) near the bottom of base.
2. Align the screws with the holes then tighten the wing screws (Figure).

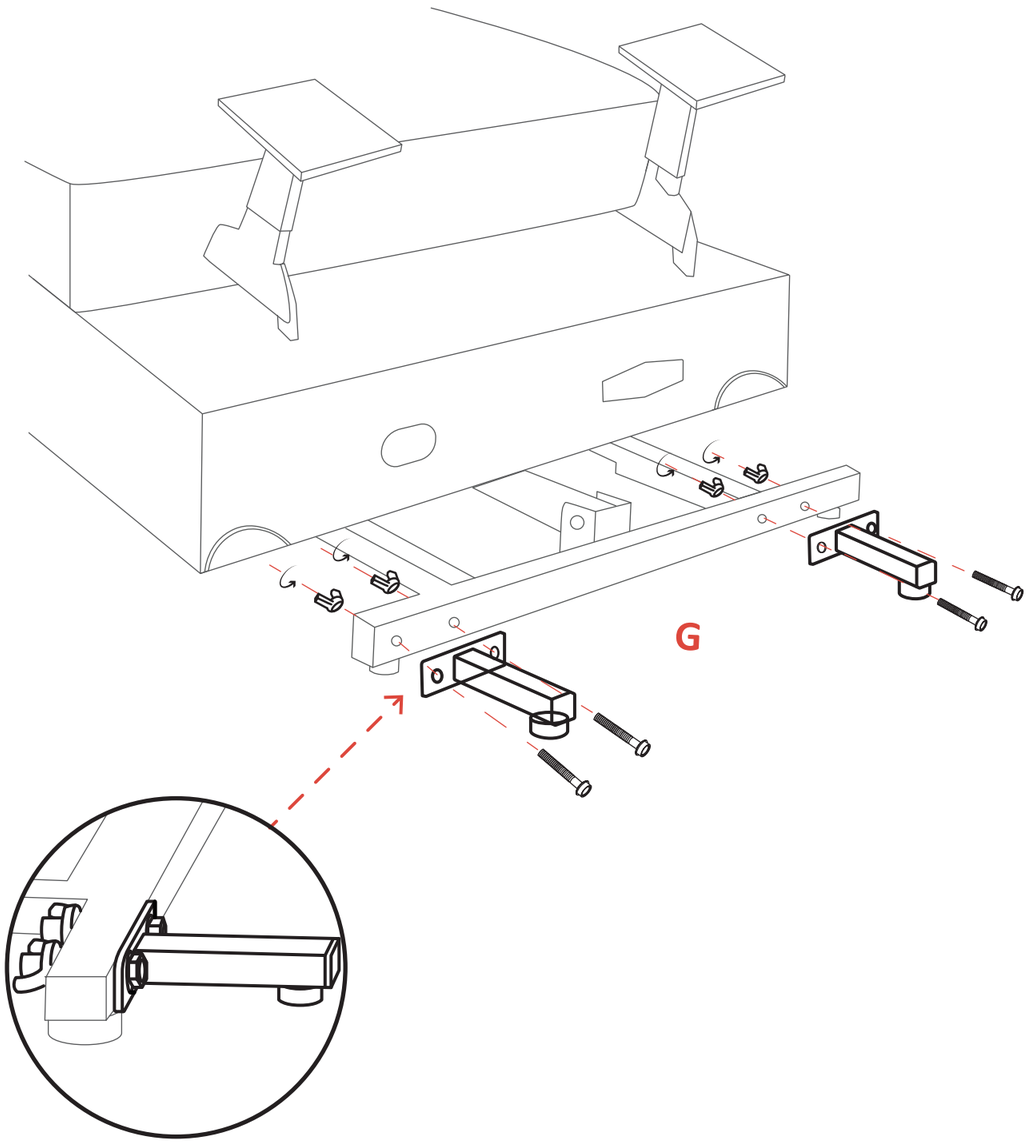

Step2 - Armrest Assembly

1. Ensure the armrest which has USB charge port is located on right of base.
2. Slide the left and right armrest into the brackets of the base.
3. Press each armrest down as far as it will go (Figure).

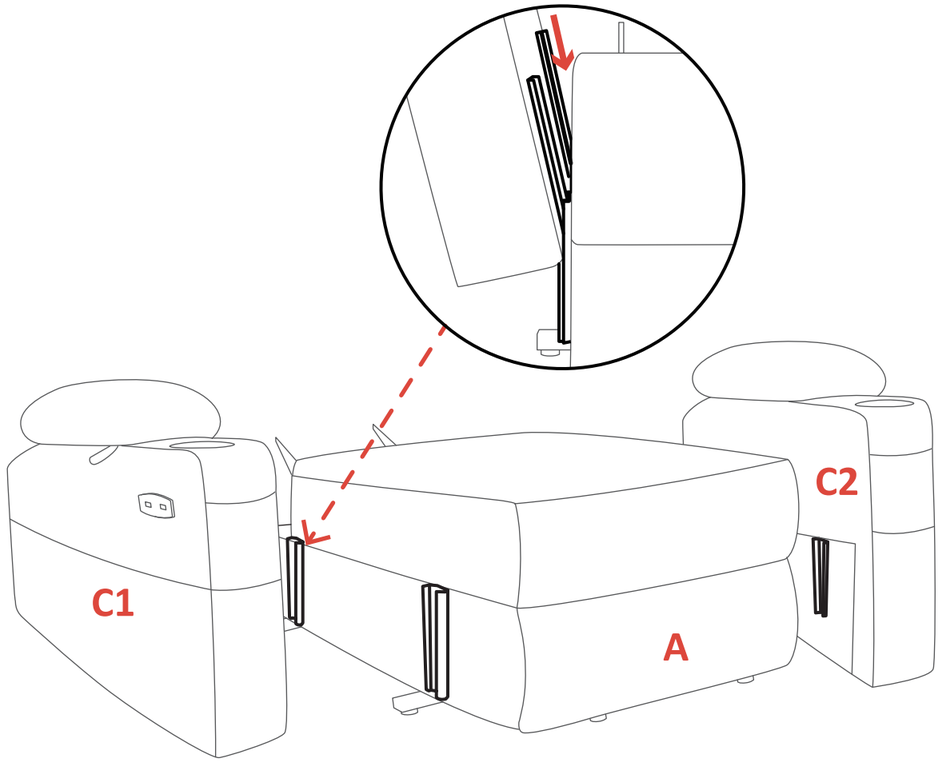

NOTE: Ensure the two connections on each armrest are both inserted into the seat tightly.

ATTENTION

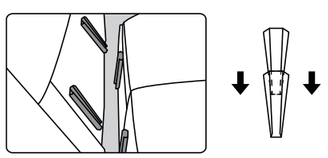

Ensure the two connections on each armrest are all inserted onto the seat tightly.

Step3 - Backrest Assembly

1. Align the brackets of backrest at the clips of seat-back (Figure).
2. Push the brackets into the seat-back tightly. Listen for a “click” sound on each side to ensure the backrest is locked in properly.

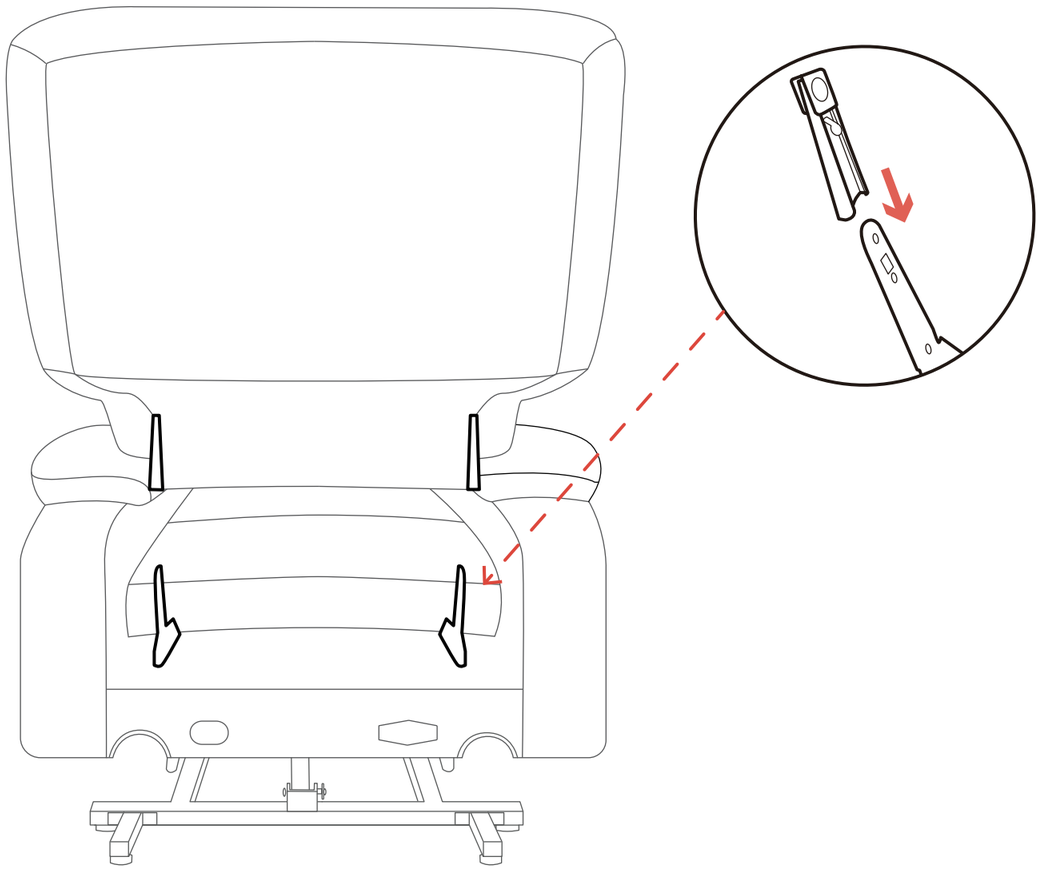

NOTE: Pull up the backrest to check if it is locked in place.

ATTENTION

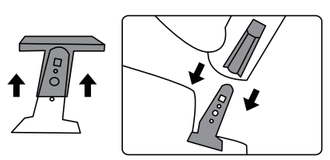

Remove the plastic cap before assembling backrest.

Step4 - Lift Connections

1. Before attaching the lift remote and massage remote to the base, please get wires through the side loops of either side armrest according to the user's preference.

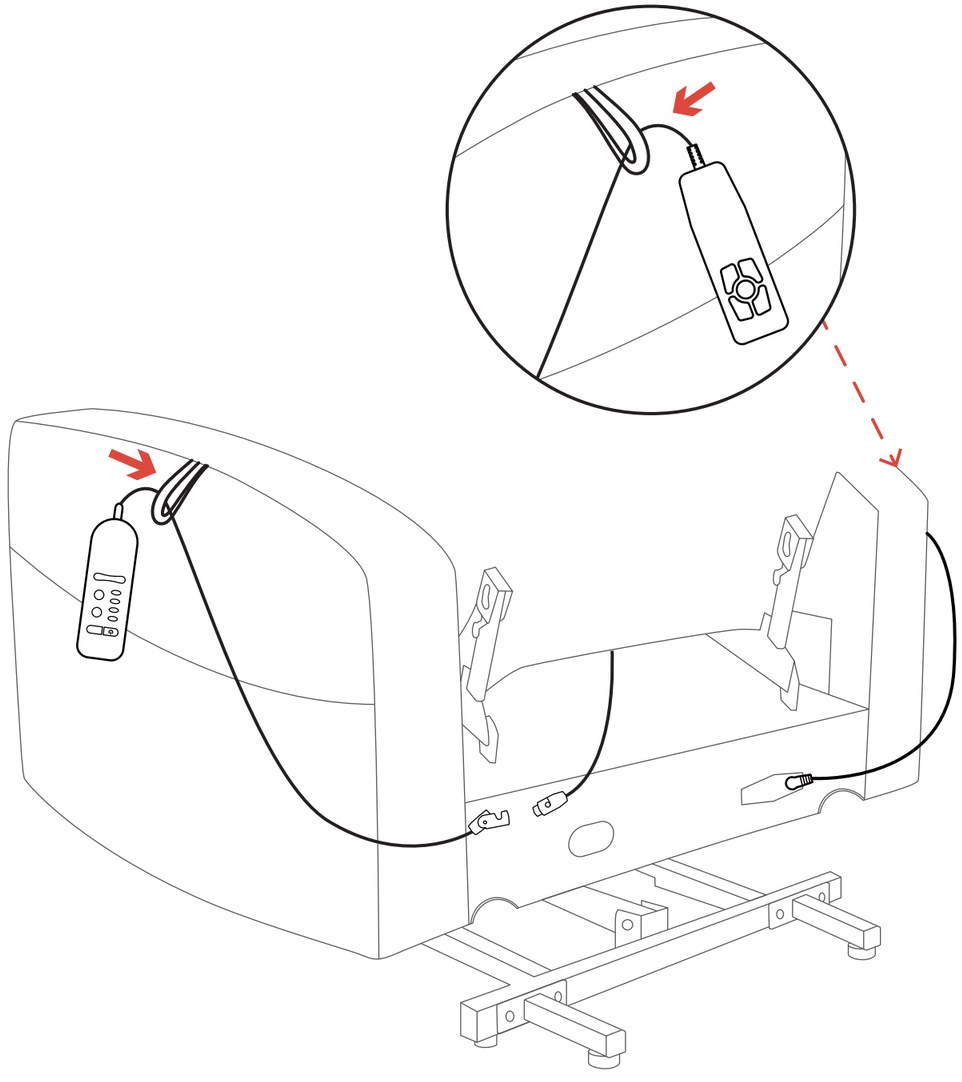

2. Connect the chairs according to the following wiring diagram (Figure).

3. Attach the chair-back to the velcro on the bottom of the chair base.

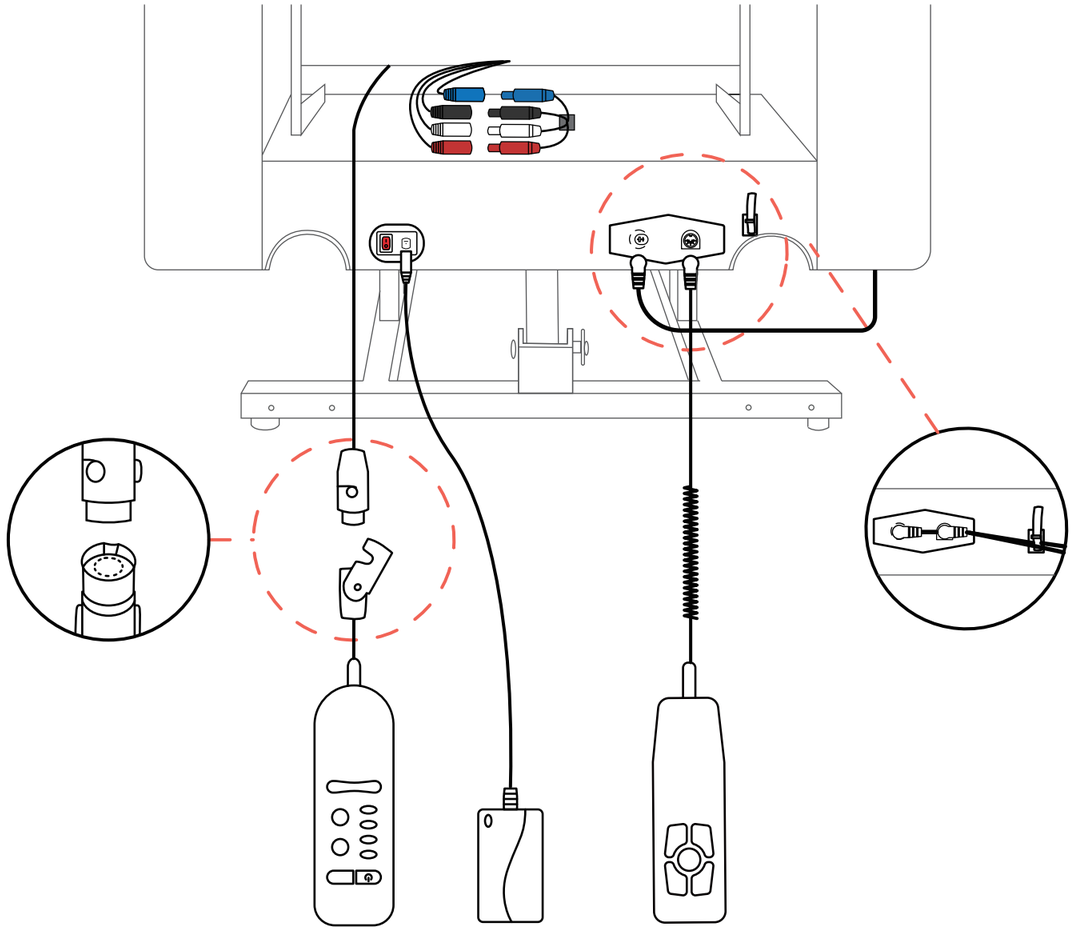

Step5 - Final Check

1. Make sure both metal brackets on each armrest are mounted on the base.
   (There are two metal brackets on each side of the base, it looks like assembly finished when you insert armrest into only one bracket instead of two, however all pressure will apply to one bracket, that is one likely reason that the armrest fall apart from the seat.)
2. Make sure the backrest inserts are locked to the base.
   (Pull up the backrest to check if it is locked in place.)
3. Make sure all wires are connected tightly.
4. Make sure all wires are not placed on the bottom of the rack and will not be pressed by frame.
   (If the wire is pressed by the frame, the wire will be broken by the frame and the chair will stop working.).
5. Make sure the anti-tilt fitting screws are tightened.

III. OPERATING INSTRUCTIONS

1. Operation Precautions

- Do not use an extension cord.
- Do not exceed recommended weight limit.
- Do not use attachments not recommended by the manufacturer.
- Do not use outdoors. INDOOR USE ONLY.
- Stay away the backrest from wall at least 21.3 inches before using.
- Use this lift only for its intended use as described in the operating.
- Keep dry. Do not operate in a wet or moist environment.
- Keep all cords away from heated surfaces and pinch points.
- Ensure the hand control is out of the way before sitting in the chair.
- Always leave the lift chair in an upright and closed position when not in use.
- Periodically check the hand control and all power cords for visible damage.
- Do not use the footrest as a seat, or for purposes outside its intended use.
- Do not lean or apply downward force to the chair-back while in recline position.

NOTE:

If you discover a problem at any point during the setup and positioning of your lift chair,stop and contact the MCombo Customer Support immediately. To avoid personal injury and/or product damage, do not plug the unit into the electrical outlet until the problem is corrected and do not attempt to fix electrical problems by yourself.

2. Lift Operation Instruction

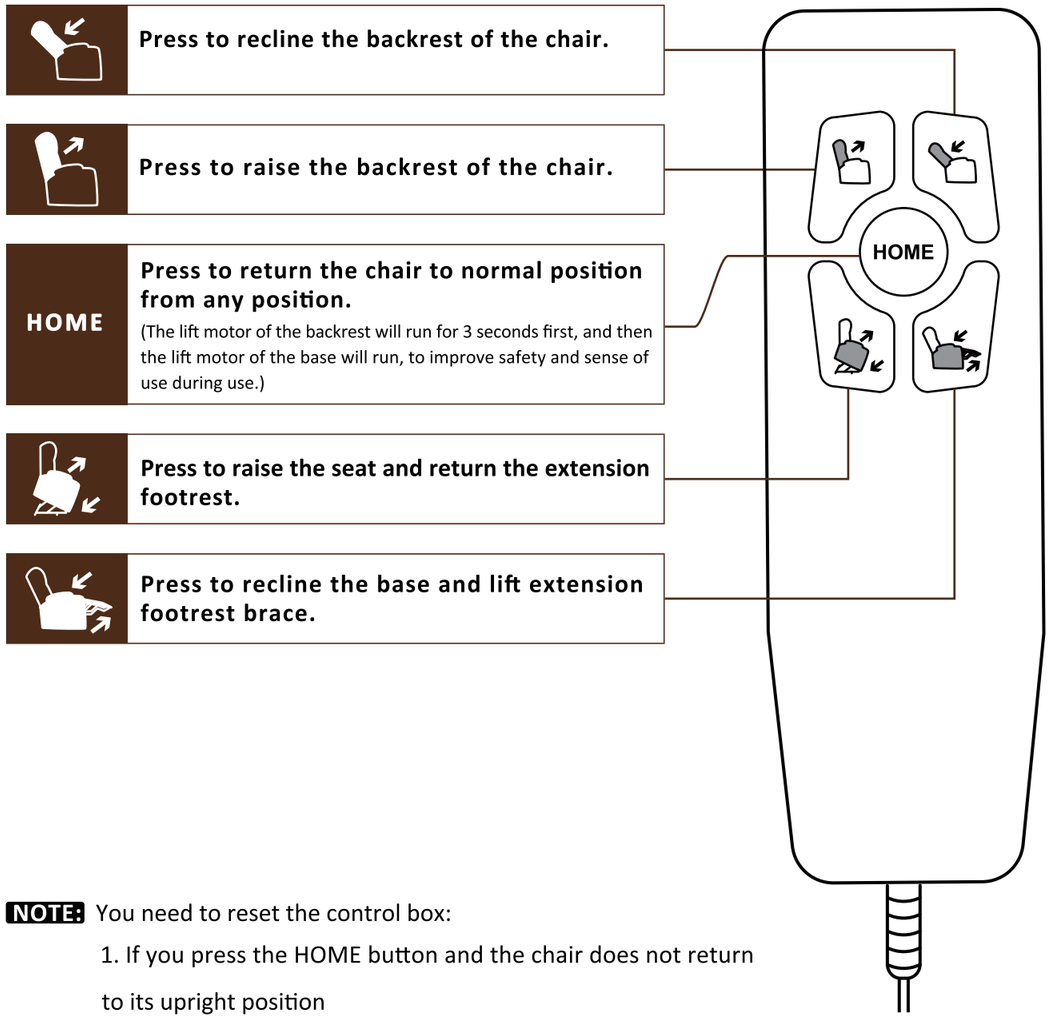

NOTE: You need to reset the control box:

1. If you press the HOME button and the chair does not return to its upright position
2. If the lift and recliner functions do not work as the lift remote request.

To reset the control box, keep pressing any one of the two buttons that control the footrest until you hear a "beep" sound which signifies that the control box has been reset.

3. Massage Remote Operation Instruction

INTENSITY	**Press to adjust massage intensity from low to high**
POWER	**Turn on/off remote control (Only control massage function)**
MODE	**Press to select 3 different massage mode**
TIMER	**The timer can be set in fixed time 10 / 20 / 30 minutes**
BACK	**Turn on/off heat function of the backrest**
SEAT	**Turn on/off heat function of the seat**
POINTS	**Control massage points (back, lumber, Thigh, Leg)**

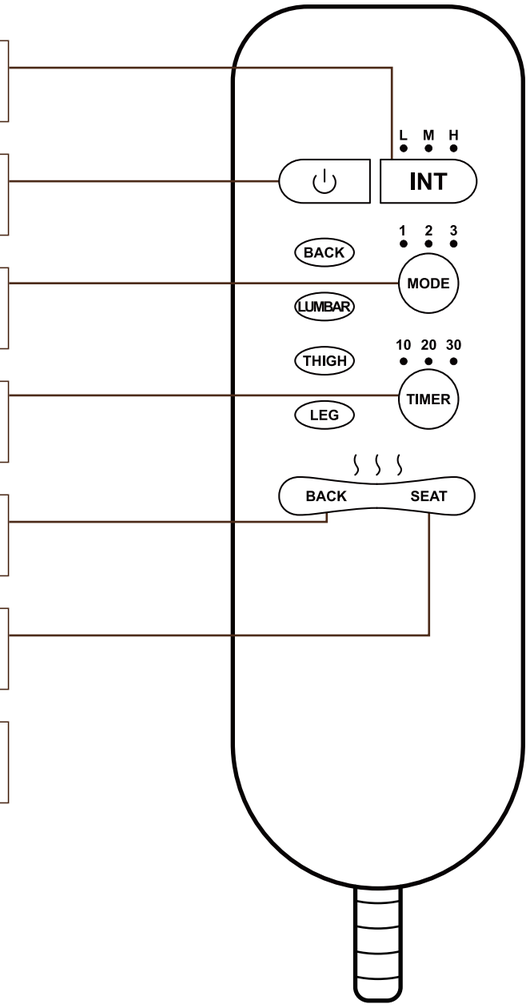

NOTE: When using the heating function alone, the time cannot be set.

IV. CARE AND MAINTENANCE

Your MCombo product will provide years of superior performance and satisfaction with regular care and maintenance. To maintain the finish quality of your "assistant", please follow the guidelines and cleaning procedures provided below.

■ Notice

- Do not place your chair in direct sunlight, as sunlight causes fading.
- Do not smoke cigarettes while seated in or using your chair.
- Avoid extreme changes in temperature by arranging chair away from radiators, heat and air vents.
- Do not use solvent-type cleaners to spot clean.
- Do not saturate fabric.
- Please be careful that pet scratch may cause fabric or leather break.

1. Fabric Care

- Inspect the fabric on a regular basis for any pulls, tears, or gaps.
- Frequent vacuuming or light brushing with a nonmetallic, stiff bristle brush to remove dust and grime is recommended.
- When liquid spills onto the fabric, please immediately wipe off liquid spills with a dry or lightly dampened clean white cloth, sponge, or paper towel.

2. Faux Leather Care

- Wipe leather down regularly with a clean, dry microfiber cloth.
- For more stubborn dust, dampen the cloth with distilled water. Make sure that the cloth is not soaking wet. Never let water soak into leather.
- Always be sure to use a soft cloth and never use an abrasive brush or scrubber as this can scratch and damage the leather.

3. Electronics Care

- Inspect all wiring harnesses to make sure they are not damaged or stuck under chair.
- Keep all the electronics free from moisture and temperature extremes.
- Check electrical components frequently for signs of corrosion and replace as necessary.
- Contact MCombo Customer Support if damage is present, do not fix it by yourself.

4. Disposal & Recycling

Your power recliner sofa must be disposed of according to applicable local and national statutory disposal regulations. Contact your local waste disposal agency for information on proper disposal of recliner sofa packaging, metal/wood frame components, fabric, electronic components.

V. TROUBLESHOOTING

The following troubleshooting FAQs should summarize what you need to know about your power recliner sofa. If at any time you do not feel comfortable performing the troubleshooting steps listed in this manual, please contact MCombo Customer Support for service.

Questions	Answers
What if my lift chair does not operate at all?	• Make sure all the connections at the bottom of the chair are secured; refer to the Assembly Instructions. • Make sure the **GREEN** light of the lift remote is on. • Check if the **GREEN** light on the power adapter is on. • Check all the electrical cords are not crimped or pinched. • Check if the light of the **RED** button at the back of the base is on. • Make sure all wires are connected tight into the control box on the bottom.
What if the massage and heat do not work?	• Make sure the light of the massage remote is on. • Check whether the USB light is on to determine whether there is a problem with the connecting box. • Check all the electrical cords are not crimped or pinched. • Check if the **GREEN** light of the power adapter is on. • Check if the light of the **RED** button at the back of the base is on.
What if the USB charge ports do not work?	• Check if the **GREEN** light at the power adapter is on. • Make sure the USB cable coming out of the right armrest is properly connected to the connecting box behind the bottom of the chair; refer to the Step 3 lift connection in the "Assembly Instructions". • Check if the light of the **RED** button at the back of the base is on.

Questions	Answers
What if my lift chair is wobbly?	• Check the base of chair to make sure all the rubber seat retainers are not broken. • Make sure the armrests are installed tightly; refer to the Assembly Instructions.
What if the armrest falls apart from seat?	• Ensure the two connections on each armrest are all inserted onto the base tightly. • Check the brackets of armrest and base to ensure there is no defects.
What if my lift chair makes a clicking noise?	• Check the lift motor and make sure the end of lift motor at the center of pivot point. • Make sure the weight capacity of 350 Ibs has not been exceeded.
What if my lift chair tilted to one side?	• Check the brackets of backrest are installed into seat tightly. • Make sure the rack of lift chair is in a good condition without any distortion. • Use lift chair on the flat carpet, not smooth floor.
What if the remote is very hot?	• Check all wiring harnesses to make sure they are not damaged or frayed. • If all cords are in a good condition, please unplug the remote and cool it for a while before using it. • If there is a burning smell, unplug the remote and contact MCombo support to replacement.

NOTE:
If the lift recliner still does not operate properly, please contact the MCombo® Customer Support for help and never attempt to make any repairs or adjustments yourself.

Lift Motor Replacement:

Step1 - Turn the Chair to the Left

First turn the chair to the left, the right armrest is upward, be careful not to break the wire of USB charge ports.

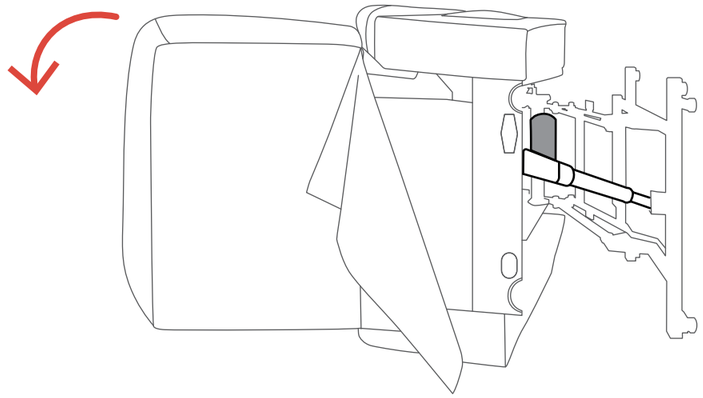

NOTE: Take an original bottom picture for reference before disassembling.

Step2 - Unplug the Wire of Lift Motor

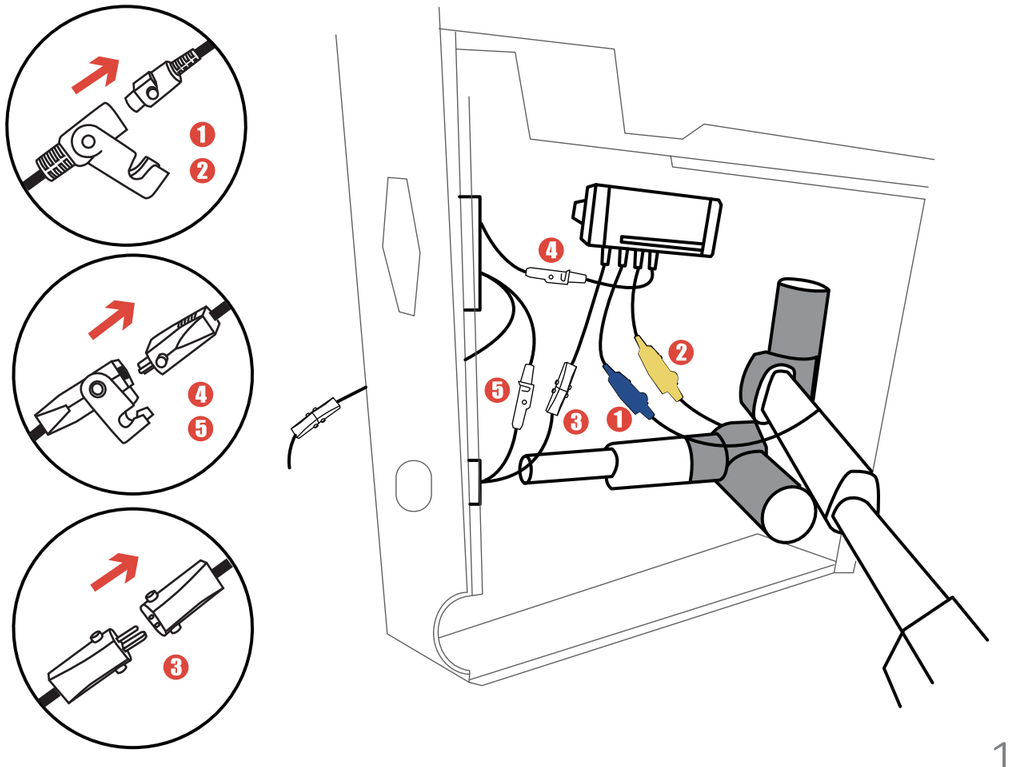

Step3 - Remove Bolts

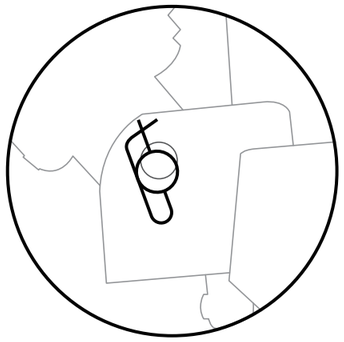

(1) The original position of the paper clip

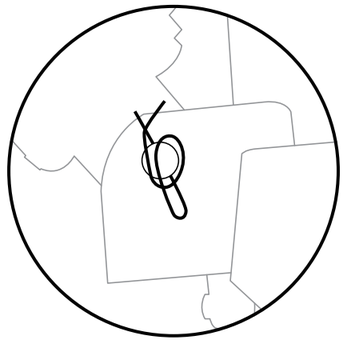

(2) Twist the paper clip

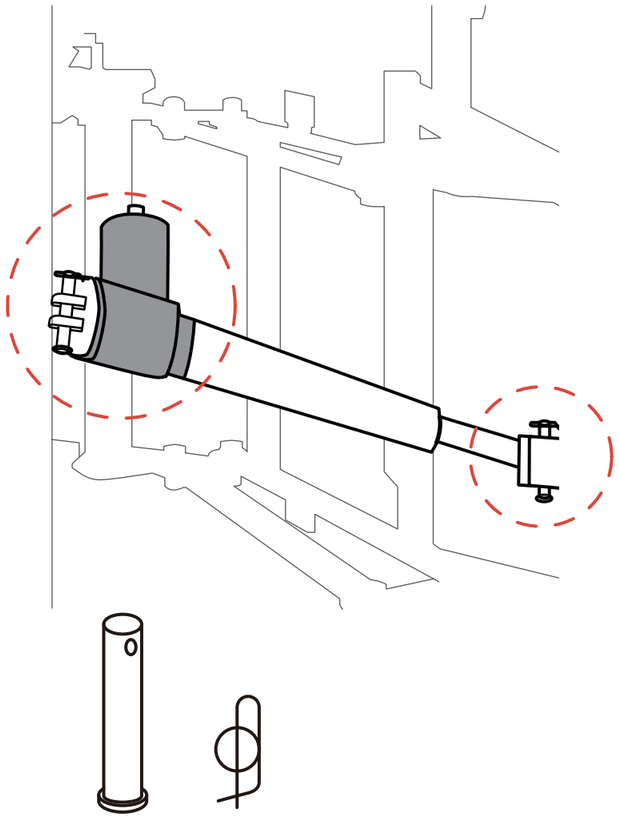

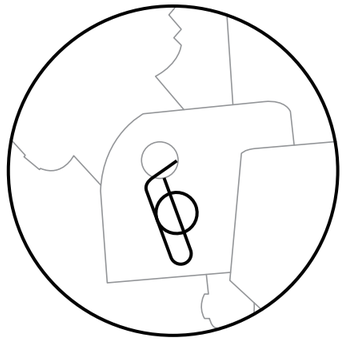

(3) Pull out the paper clip

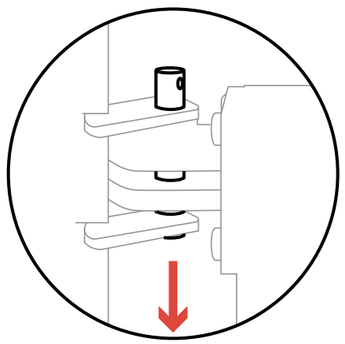

(4) Pull out the bolt

NOTE: The disassembled small parts need to be put away to prevent falling into the rack.

Step4 - Replace the New Lift Motor

Insert bolts and paper clips at both ends of the lift motor.

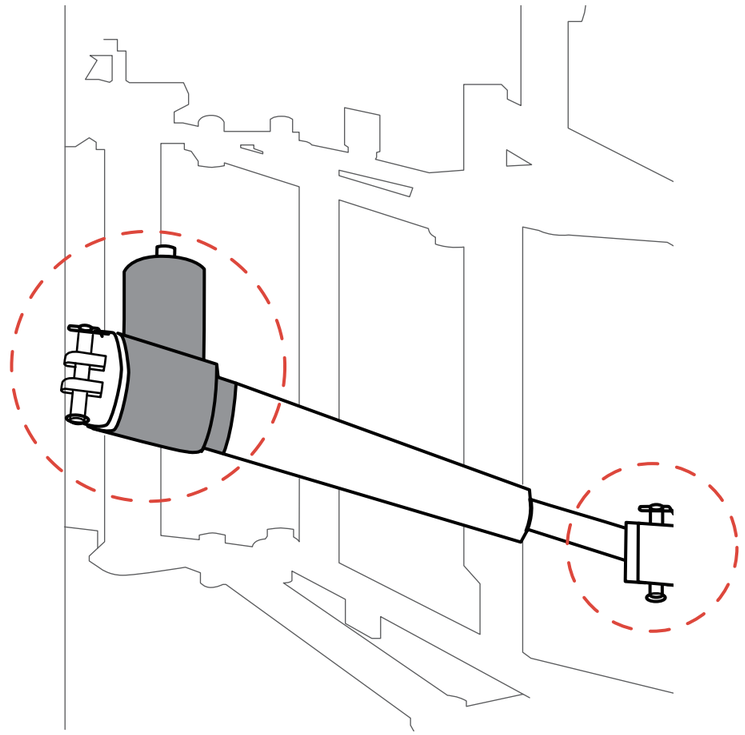

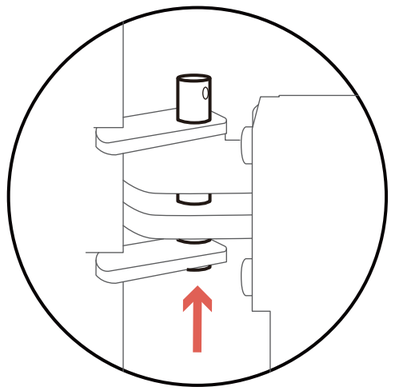

(1) Insert the bolt

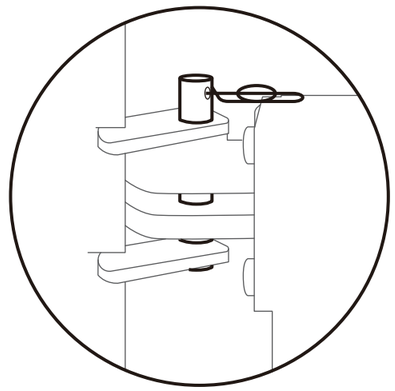

(2) Insert the paper clip

NOTE: Please note that the motor of the lift motor is upward, be careful not to install it backwards, otherwise the lift motor will break.

Step5 - Plug in the Wire of Lift Motor

NOTE: Please make sure all wires are not been crushed or pulled.

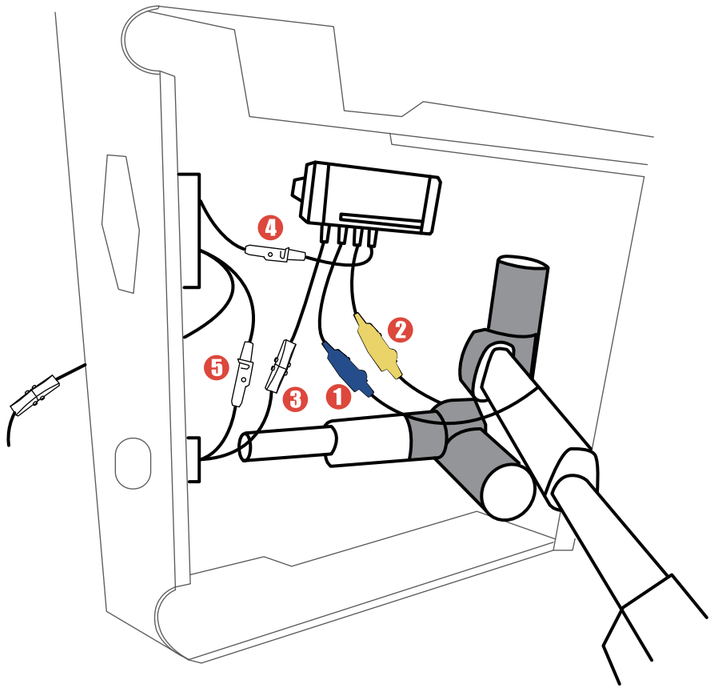

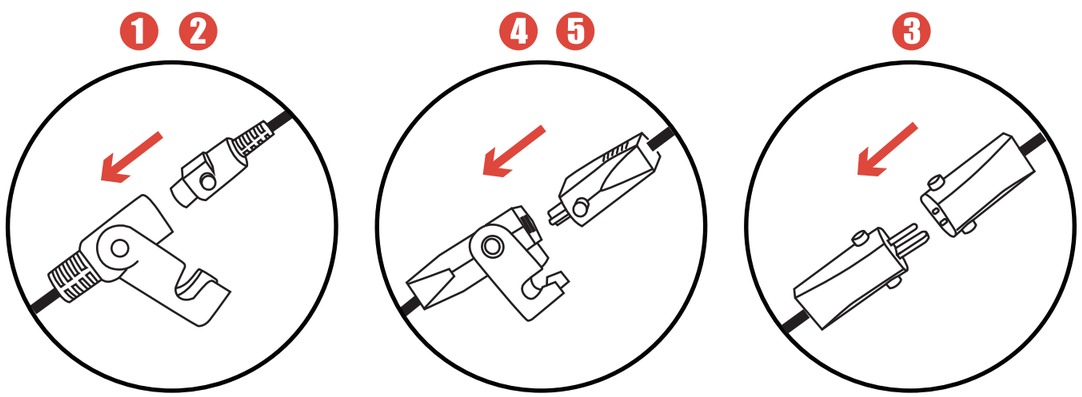

Step6 - Final Check

Check & Confirm

1.Make sure bolts and paper clips are fully inserted.

2.Make sure the lift motor is installed in the correct direction.

3.Make sure the wires are not crushed by the seat frame.

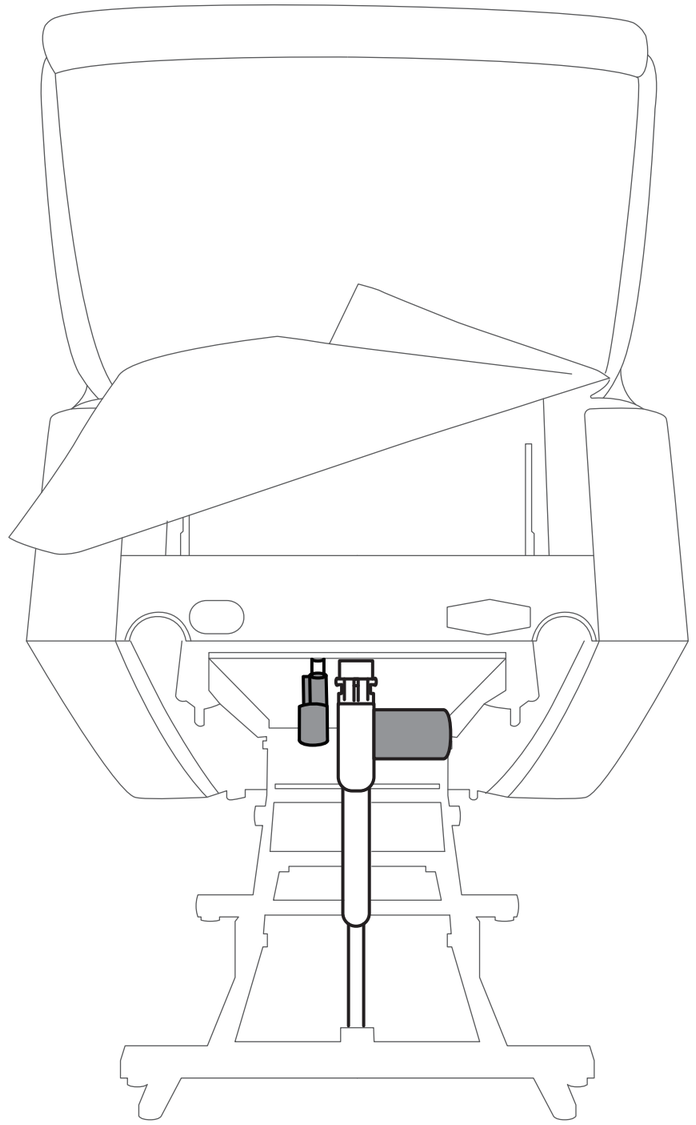

VI. DISASSEMBLY INSTRUCTION

■ Notice

- Ensure the chair is in seated position and its footrest return to original position.
- Please unplug the power cord before disassembling.
- Please refer to the installation steps from back to front and disassemble the chair in reverse order.

Step1 - Disconnect all Connections

Please disconnect all connections on the chair base and backrest before disassembling.

Step2 - Disassemble Backrest

1. Pushing the metal ears of the backrest inserts outward (Refer to arrow direction).
2. After unlocking the metal lugs on both sides of the backrest, hold the bottom part of the backrest marked in the picture below and pull it vertically upward.

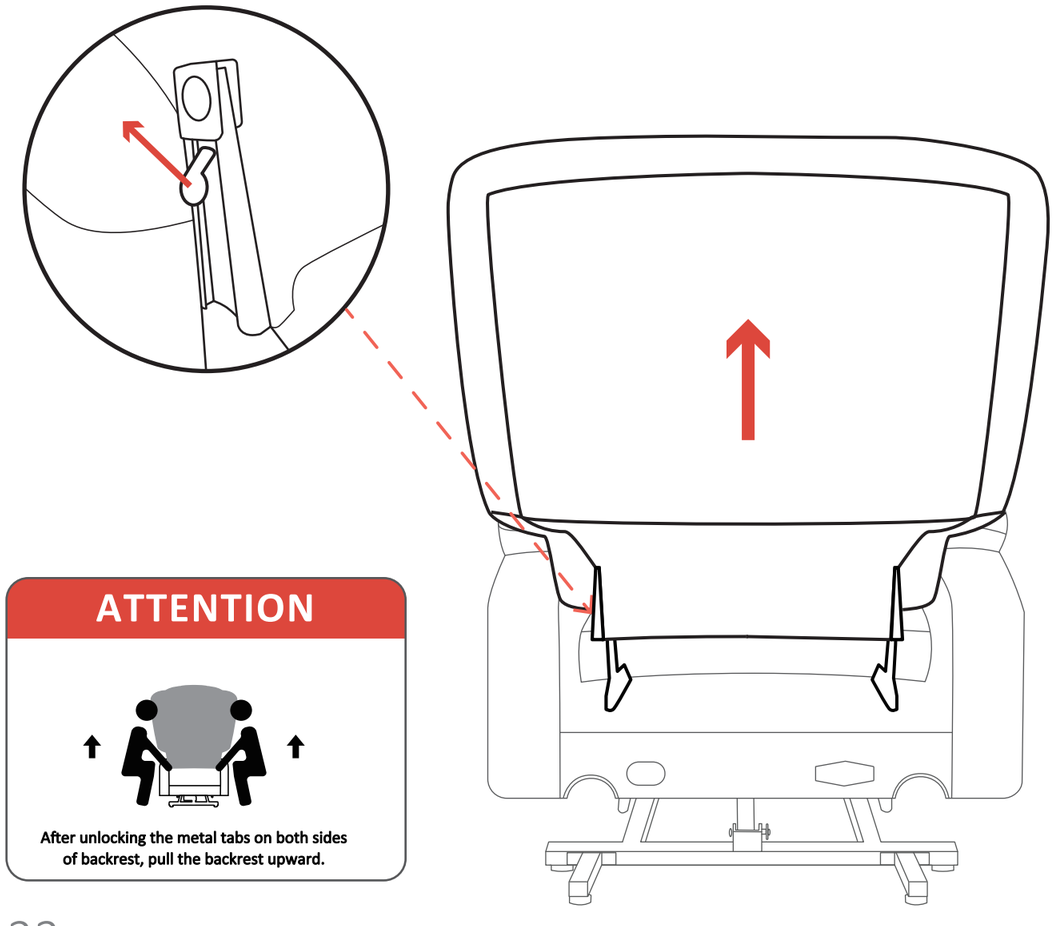

ATTENTION

After unlocking the metal tabs on both sides of backrest, pull the backrest upward.

Step3 - Disassemble Armrests

NOTE:

- Need to remove the backrest first.
- It is best to remove armrest by two people.
- When lifting the armrest, be sure to hold the bottom of the armrest to avoid damaging the armrest bag and cup holder.

1. Use your knees to find a support point on the seat and press on the base with your own strength.
2. Hold the two marked positions at the bottom of the armrest and lift the armrest vertically upward. (Refer to arrow direction and the circular marking area.)

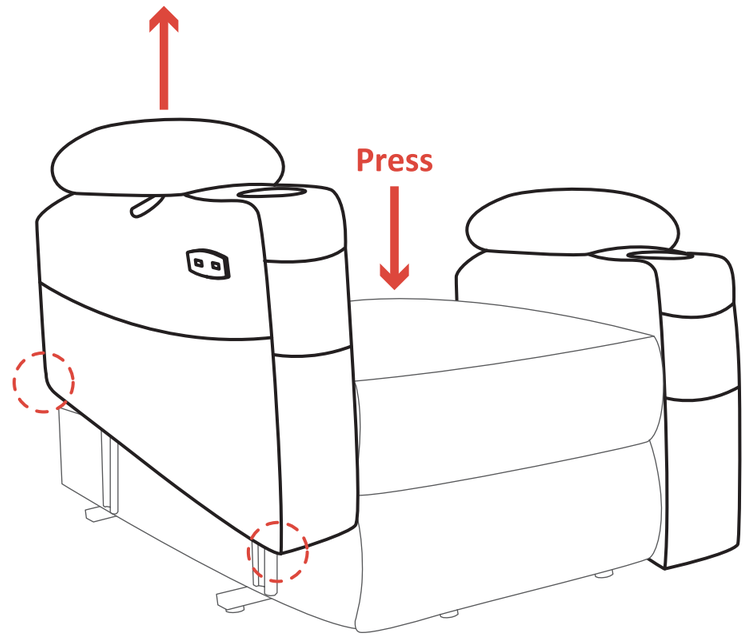

ATTENTION

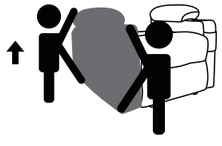

Shake the armrest slightly to loosen the brackets, make it easier to detach from the base.