ASSEMBLY INSTRUCTIONS
36INCH BATH VANITY (COMBO)

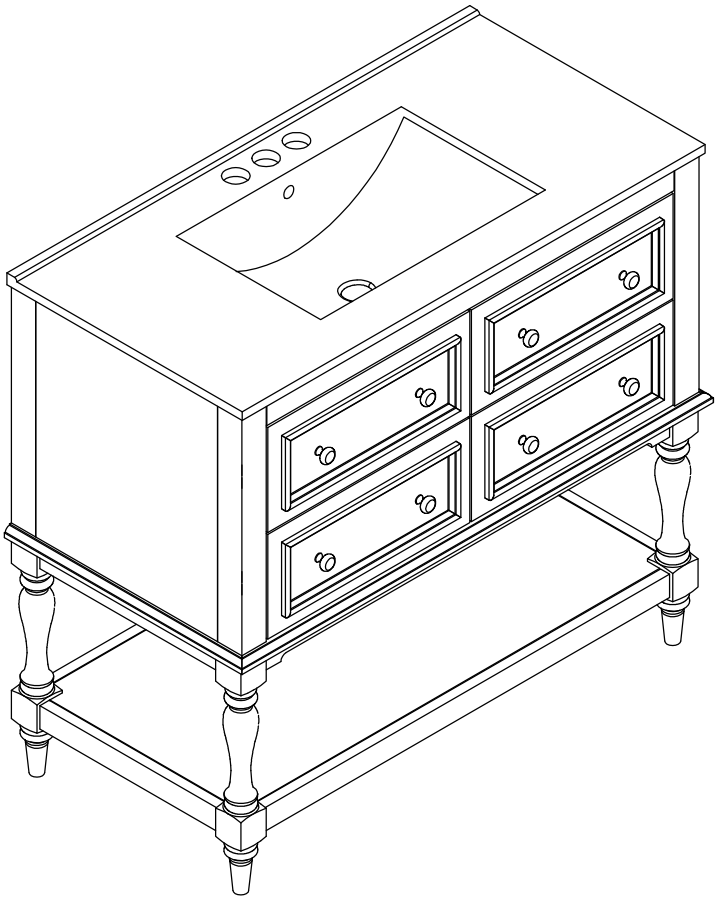

Thank you for purchasing this quality product. Be sure to check all packing material carefully for small parts which may have come loose inside the carton during shipment. Separate, identify and count all parts and hardware. Compare with the parts list to be sure all parts are present.
"DO NOT TIGHTEN SCREWS UNTIL COMPLETELY ASSEMBLED"

* Use of power tool to assemble this product will invalidate any claim and damage this product making unsafe !!!
* Please assemble on a clean soft surface to avoid damage.

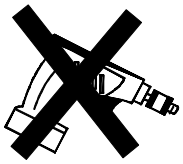

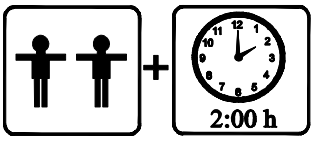

Tools Required

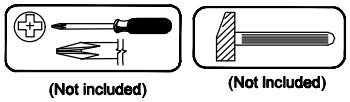

(Not included) (Not Included)

IMPORTANT:

PLEASE READ INSTRUCTION BEFORE STARTING THE ASSEMBLY

PLEASE DO NOT RETURN TO STORE

Please do not return this product to the retailer!!
We are able to assist you in ANY way

If you find that you have any trouble with assembly or missing or damaged parts please contact the seller.

Before Installation

Important – Please read these instructions fully before starting assembly

Thank you for purchasing this quality product. Be sure to check all packing materials carefully for small parts, which may have come loose inside the carton during shipment. Identify and count all items according to the PARTS LIST and/or HARDWARE LIST shown below. Check you have all the components and tools listed on the following pages.

- We recommend that you assemble this product with the assistance of another person; this will make the assembly easier, and will help eliminate damage to the product or injury to persons during assembly.
- Please do not over tighten screws or bolts until the assembly is completed.
- Keep children and animal away from the work area, small parts could choke if swallowed.
- Please put all parts on a non-abrasive floor before assembly,and follow the assembly steps to assemble your newly purchased product correctly and efficently.

Cam Lock Assembly Instructions

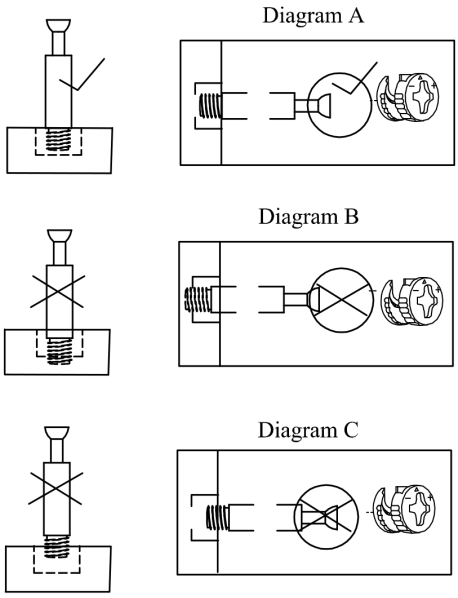

Insert Cam Bolt into hole as shown in diagram A.

Make sure not to insert the Cam Bolt:
Too deep as shown in figure B as this will cause the Cam Lock to be misaligned and unable to interlock properly.

Also avoid inserting the Cam Bolt too close to the surface of the hole as shown in figure C, as this will cause the Cam Lock to be too loose, and not interlock properly.

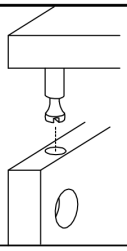

Connect the panels together.

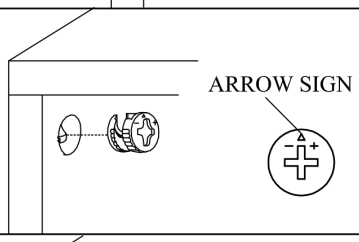

Insert the Cam Lock so the side opening fits over the head of the Cam Bolt.

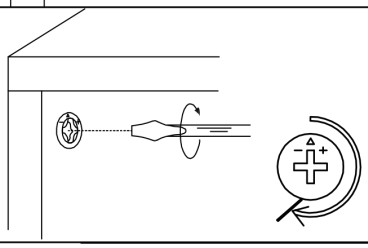

To tighten the Cam Lock, turn it clockwise on half a turn with a flat screwdriver.
**Do not use an automatic screwdriver as it may bend or break if too much power is imposed.*

Detail View - CABINET

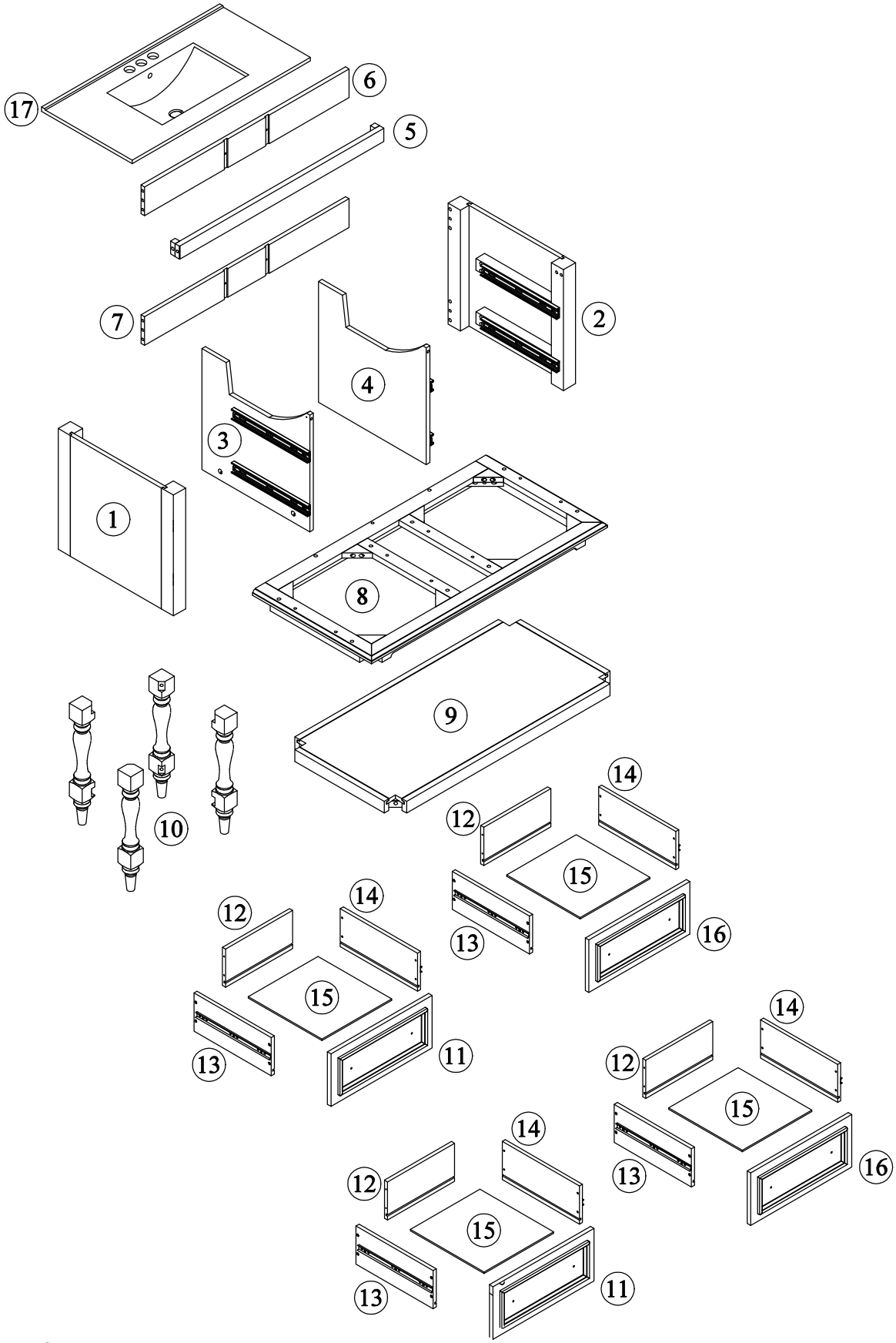

Identifying the Hardware-Identify the hardware using the illustrations below.

Part List

1 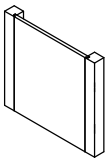 Side Panel (L) - 1pc	2 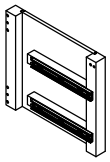 Side Panel (R) - 1pc
3 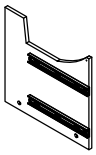 Mid Panel (L) - 1pc	4 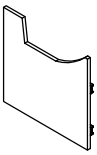 Mid Panel (R) - 1pc
5 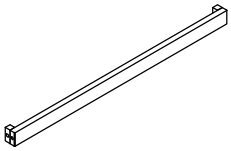 Top Bar Front - 1pc	6 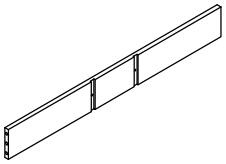 Top Panel Rear - 1pc
7 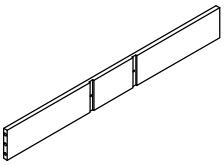 Bottom Panel Rear - 1pc	8 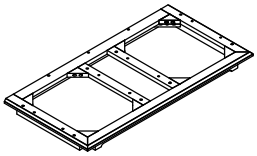 Mid Frame - 1pc
9 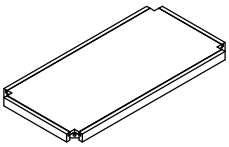 Bottom Frame - 1pc	10 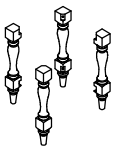 Cabinet Feet - 4pcs
11 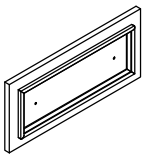 Left Drawer Face - 2pcs	12 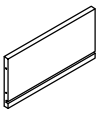 Drawer Back Panel - 4pcs
13 Drawer Side Panel (L) - 4pcs	14 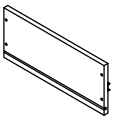 Drawer Side Panel (R) - 4pcs

Part List

15 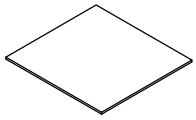 Bottom Drawer Panel - 4pcs	16 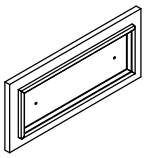 Right Drawer Face - 2pcs
17 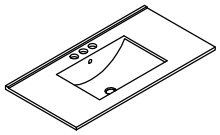 Sink - 1pc	

Hardware List

A ø6x35mm Three in one bolts(18pcs)	B ø14.5x12mm Three in one lock(18pcs)	C ø13x1/4"x38mm Hex-Head bolts(8pcs)
D ø13x1/4"x28mm Hex-Head bolts(2pcs)	E ø1/4"x16x1mm Washer(10pcs)	F Handle (8pcs)
G ø5/32"x15mm Handle screw (4pcs)	H ø5/32"x28mm Handle screw (4pcs)	I L-Bracket (2pcs)
J ø7xø3.5x12mm Round head screw (4pcs)	K ø8x30mm Wood dowel(17pcs)	L ø8xø4x25mm Round head screw(4pcs)
M ø8xø4x32mm Round head screw(32pcs)	N 4mm Allen key(1pc)	O Anti fall hardware(1set)
P ø6x30mm Wood dowel(16pcs)		

STEP: 1

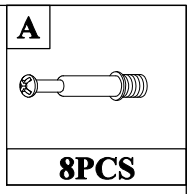
A
8PCS

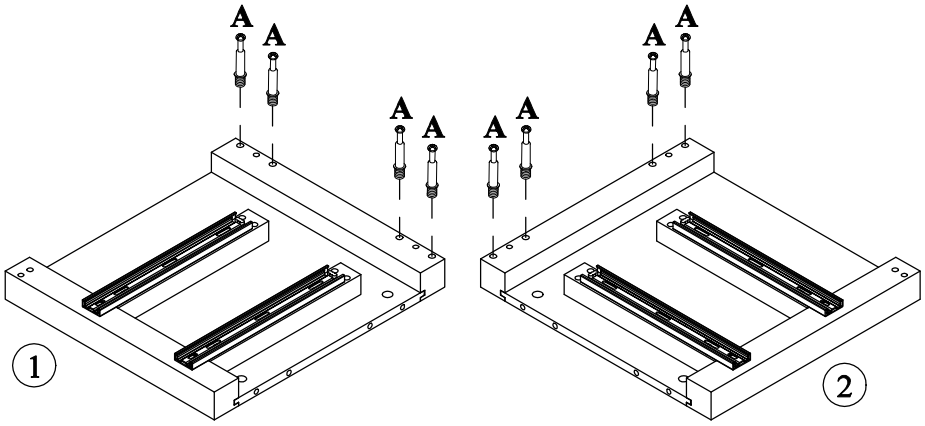
A
A
A
A
A
A
A
A
1
2

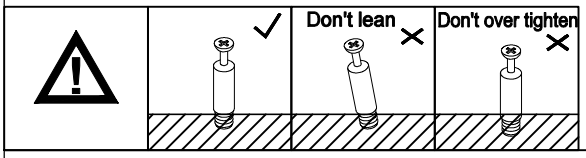
Don't lean
Don't over tighten

STEP: 2

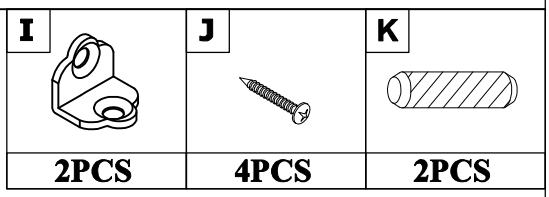
I
2PCS
J
4PCS
K
2PCS

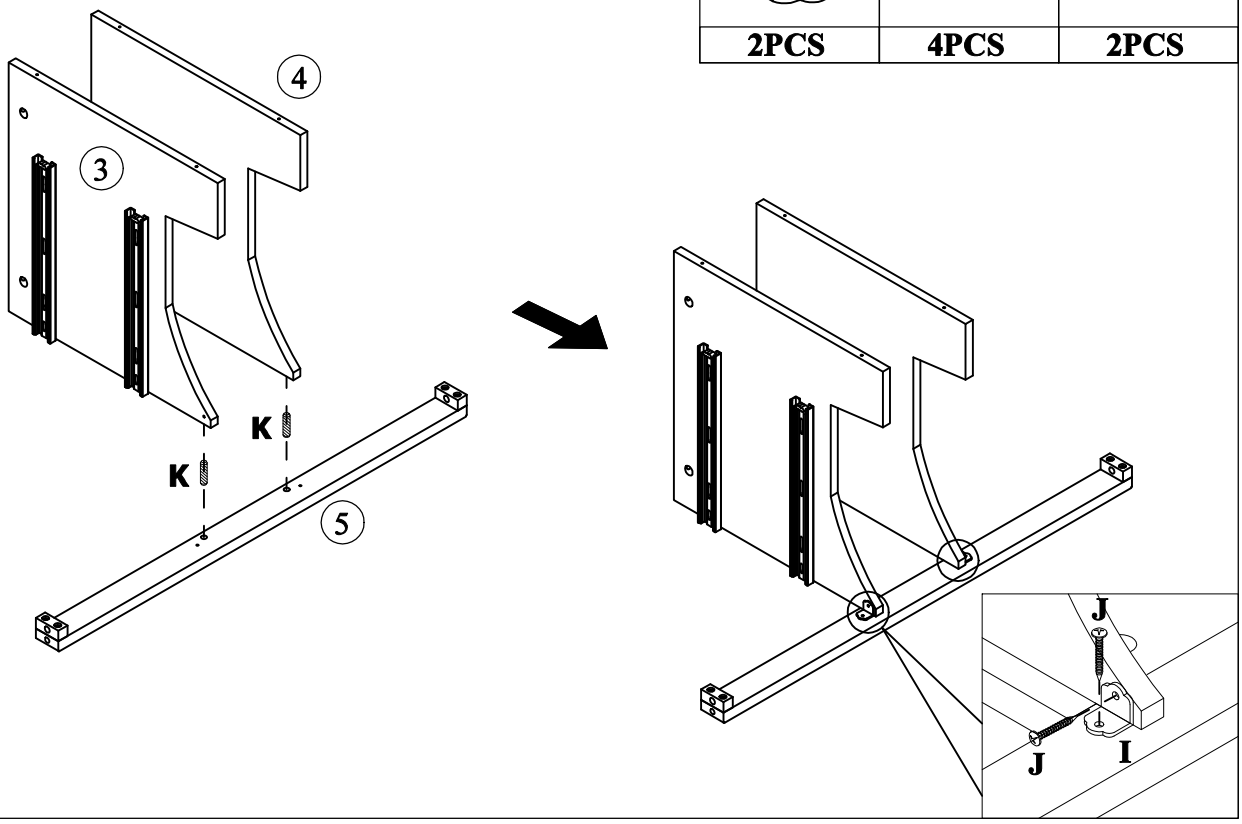
4
3
K
K
5
J
J
I

STEP: 3

L
4PCS

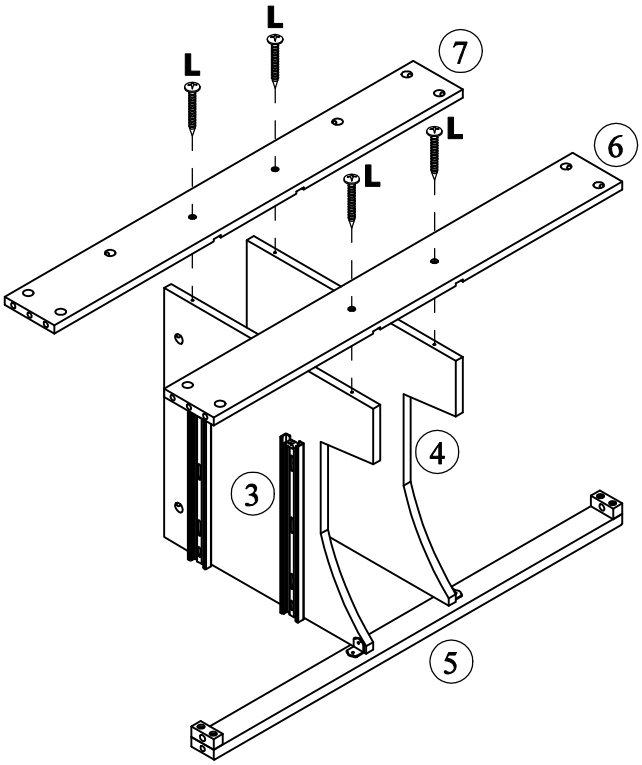

STEP: 4

D	E	B	K
2PCS	2PCS	8PCS	6PCS

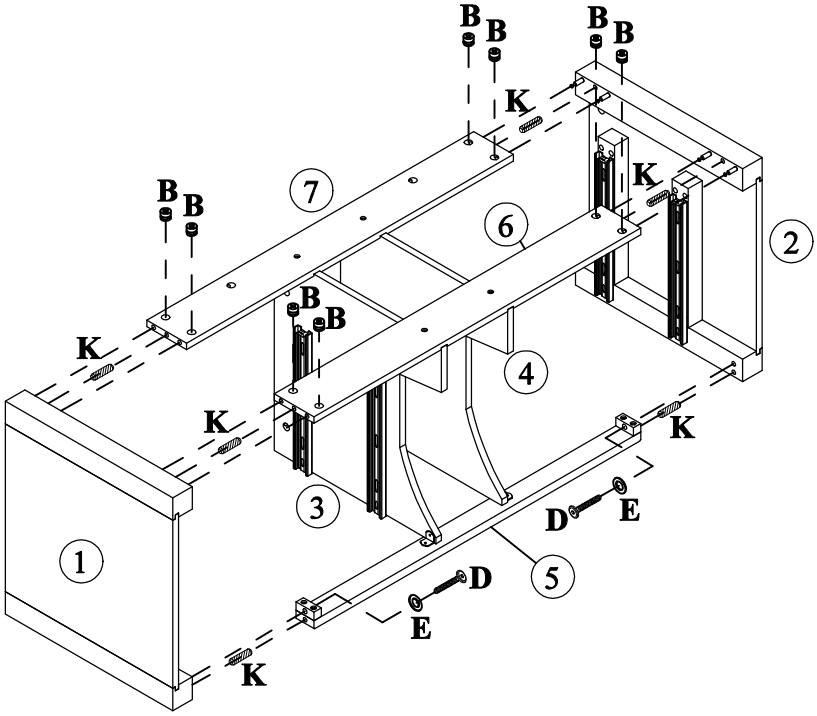

STEP: 5

C	E
3PCS	3PCS

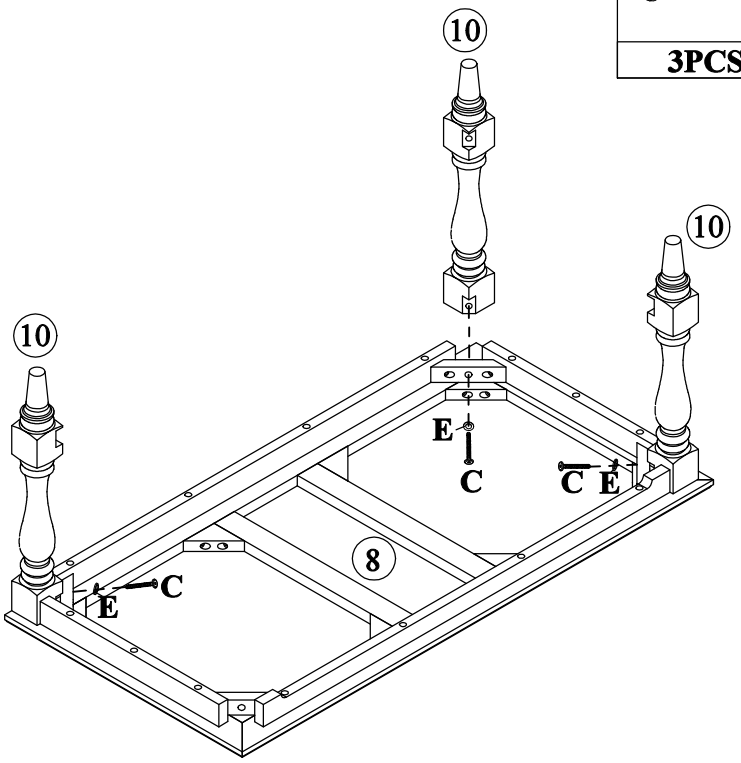

STEP: 6

C	E
3PCS	3PCS

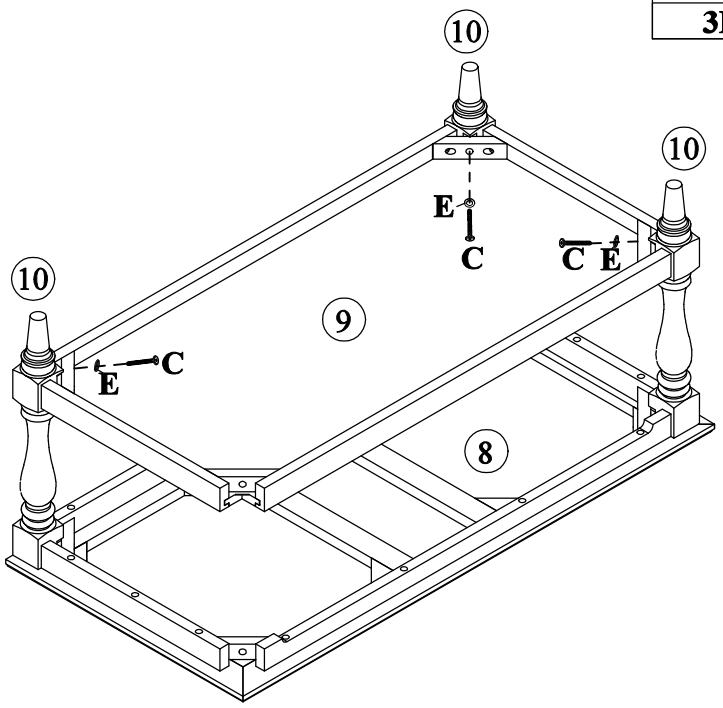

STEP: 7

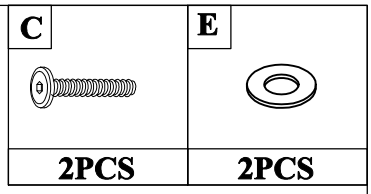
C
2PCS
E
2PCS

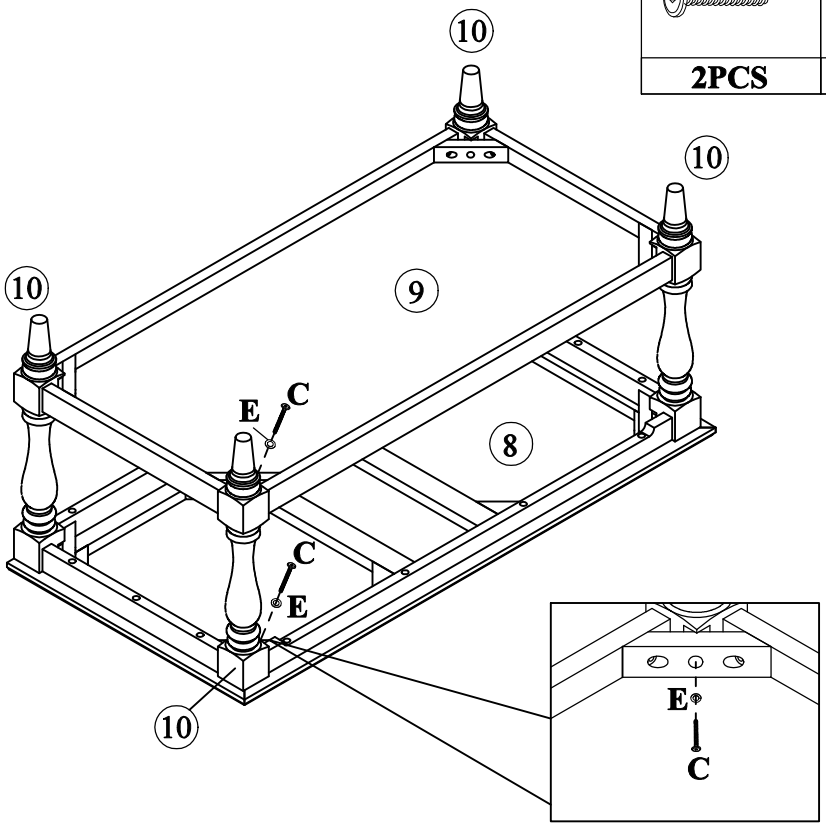
10
10
10
9
E
C
8
C
E
10
E
C

STEP: 8

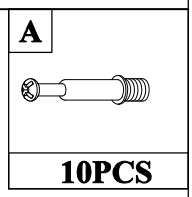
A
10PCS

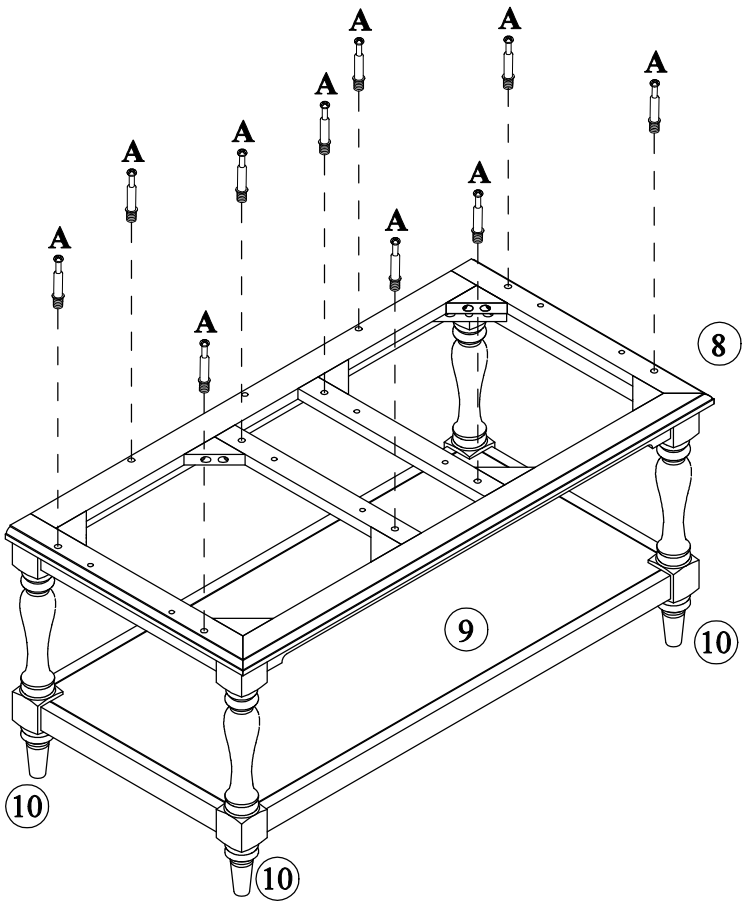
A
A
A
A
A
A
A
A
A
A
A
8
9
10
10
10

STEP: 9

B	K
10PCS	9PCS

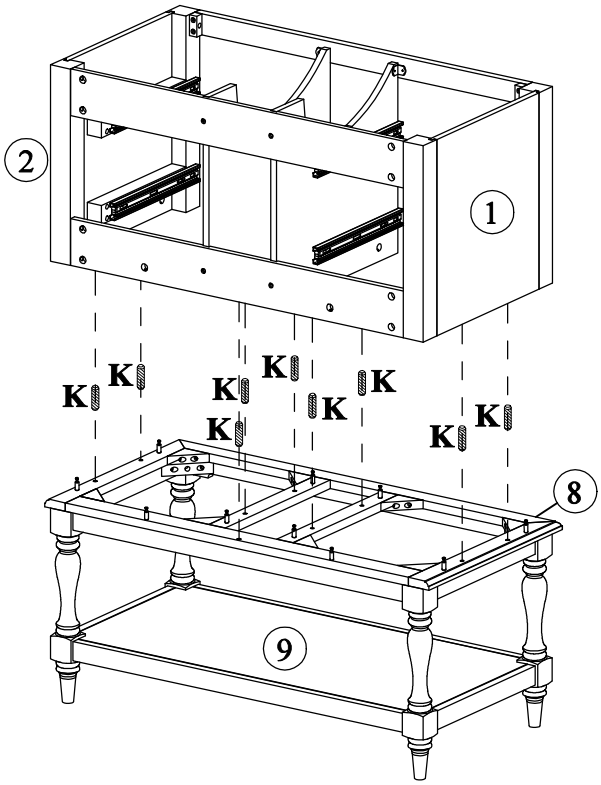

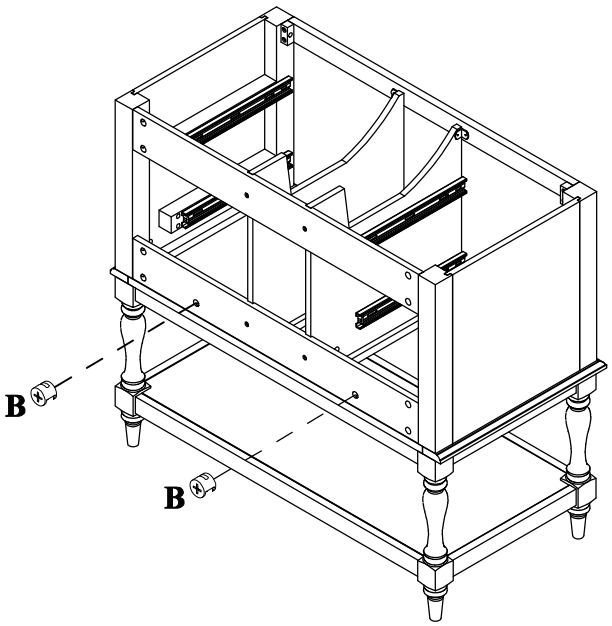

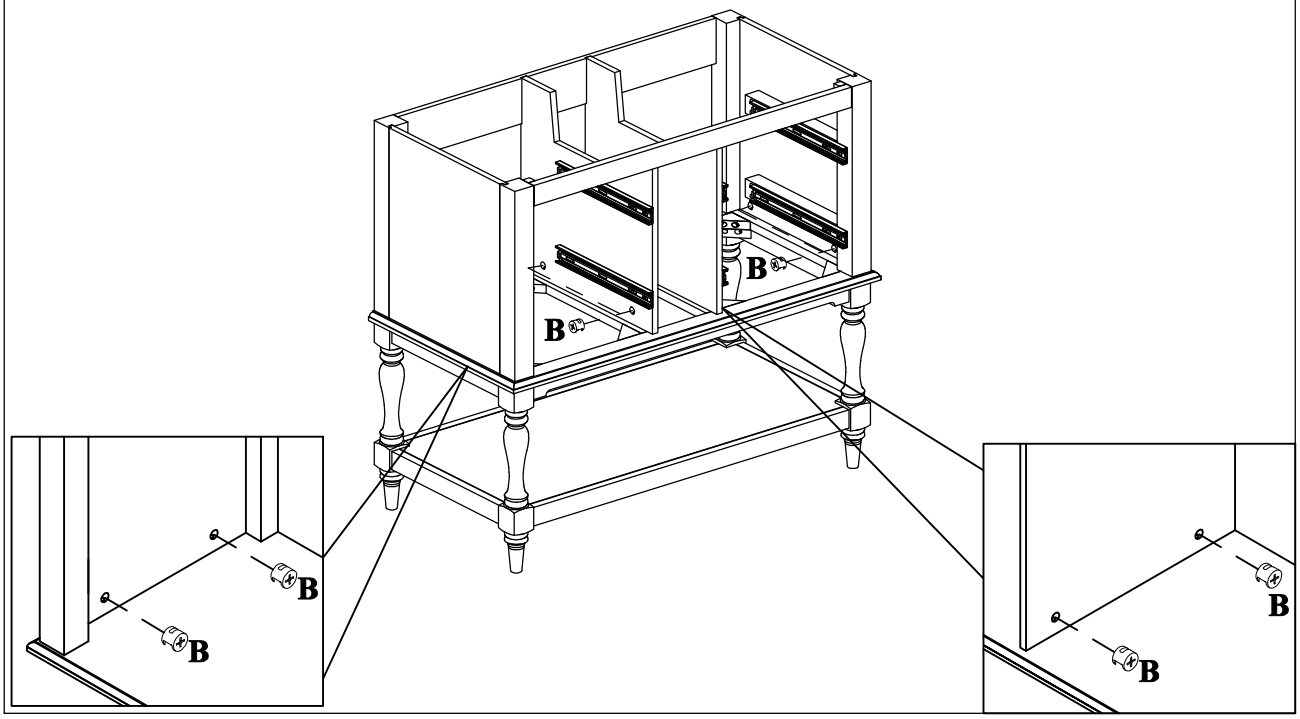

STEP: 10

M	F	G	H
		(ø5/32"x15mm)	(ø5/32"x28mm)
16PCS	4PCS	2PCS	2PCS

P
8PCS

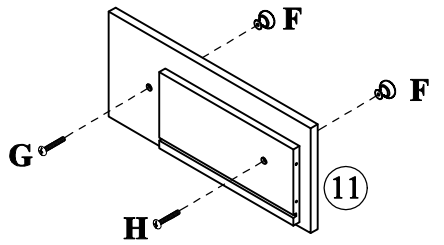

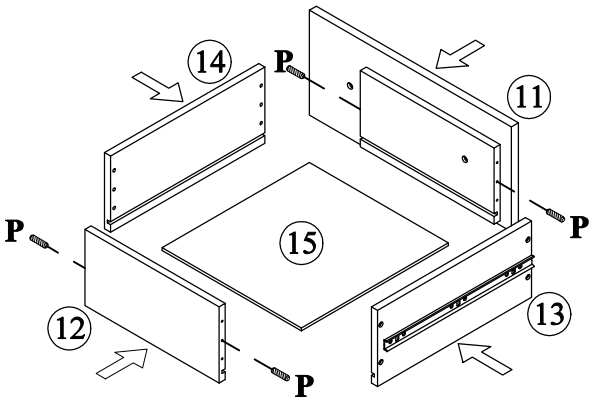

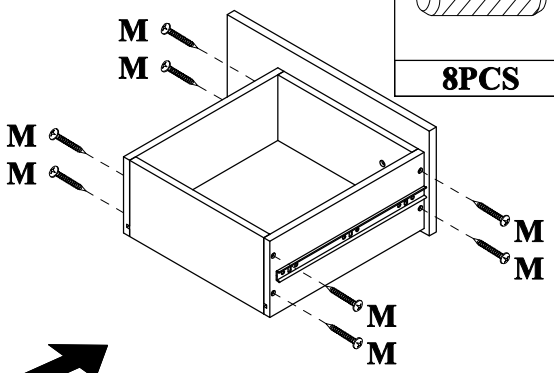

x2

STEP: 11

M	F	G	H
		(ø5/32"x15mm)	(ø5/32"x28mm)
16PCS	4PCS	2PCS	2PCS

P
8PCS

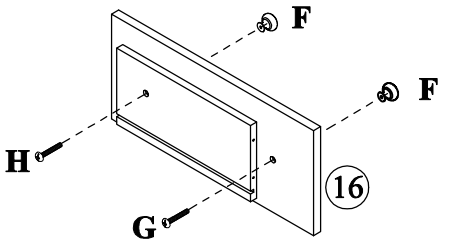

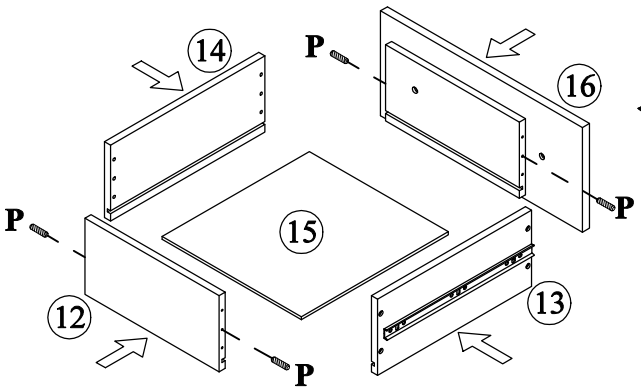

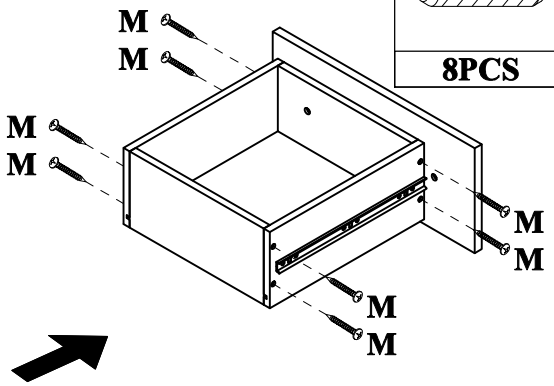

x2

STEP: 12

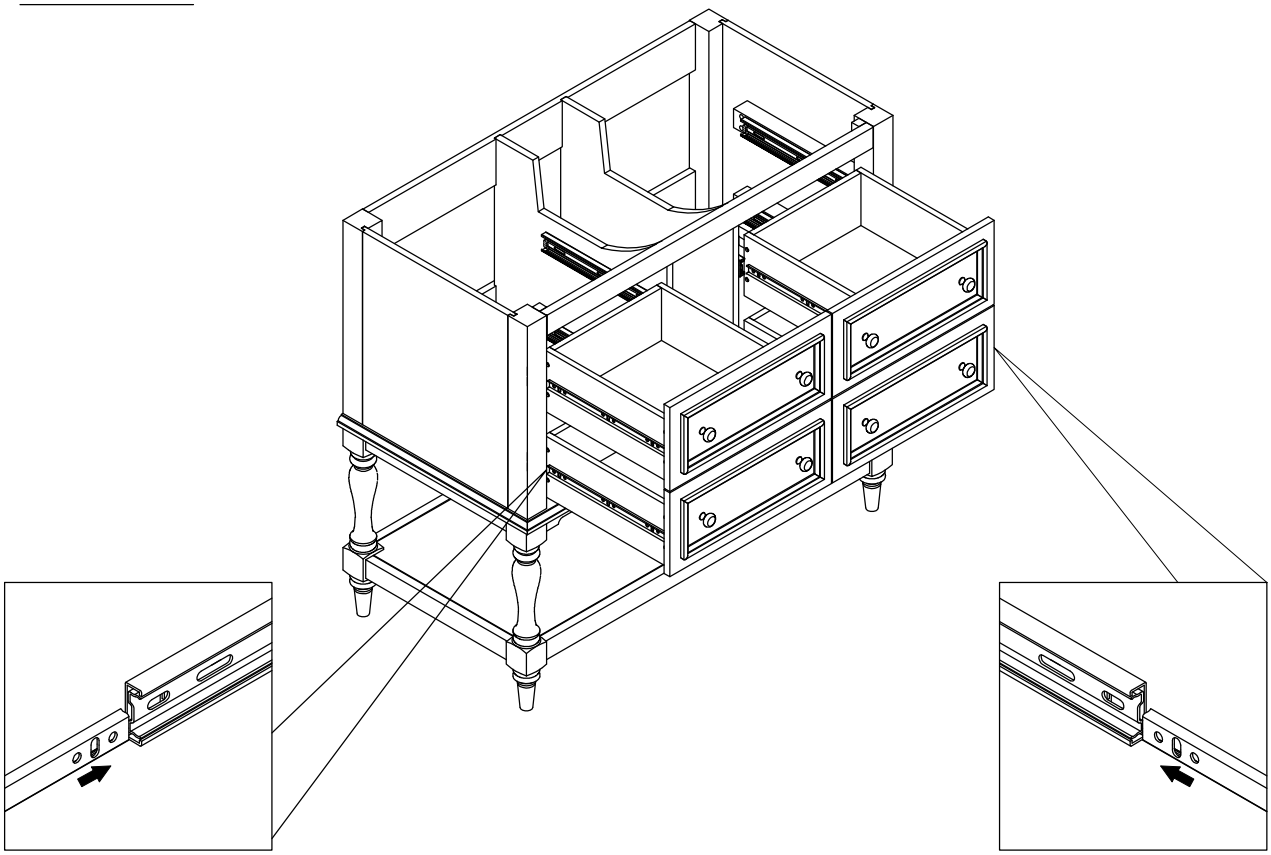

STEP: 13

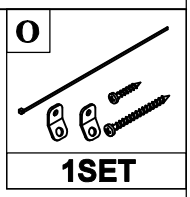

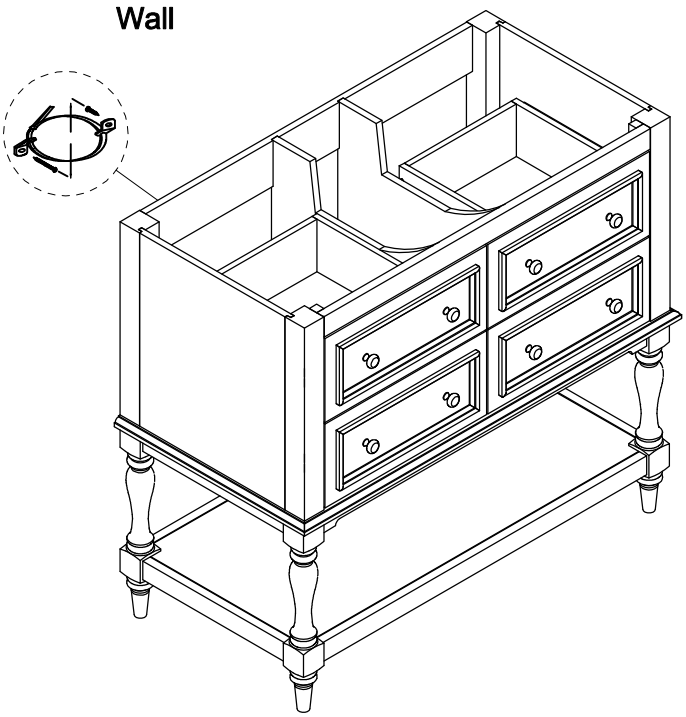

STEP: 14

Install the sink on the cabinet with glue.
Let stand for 24 hours

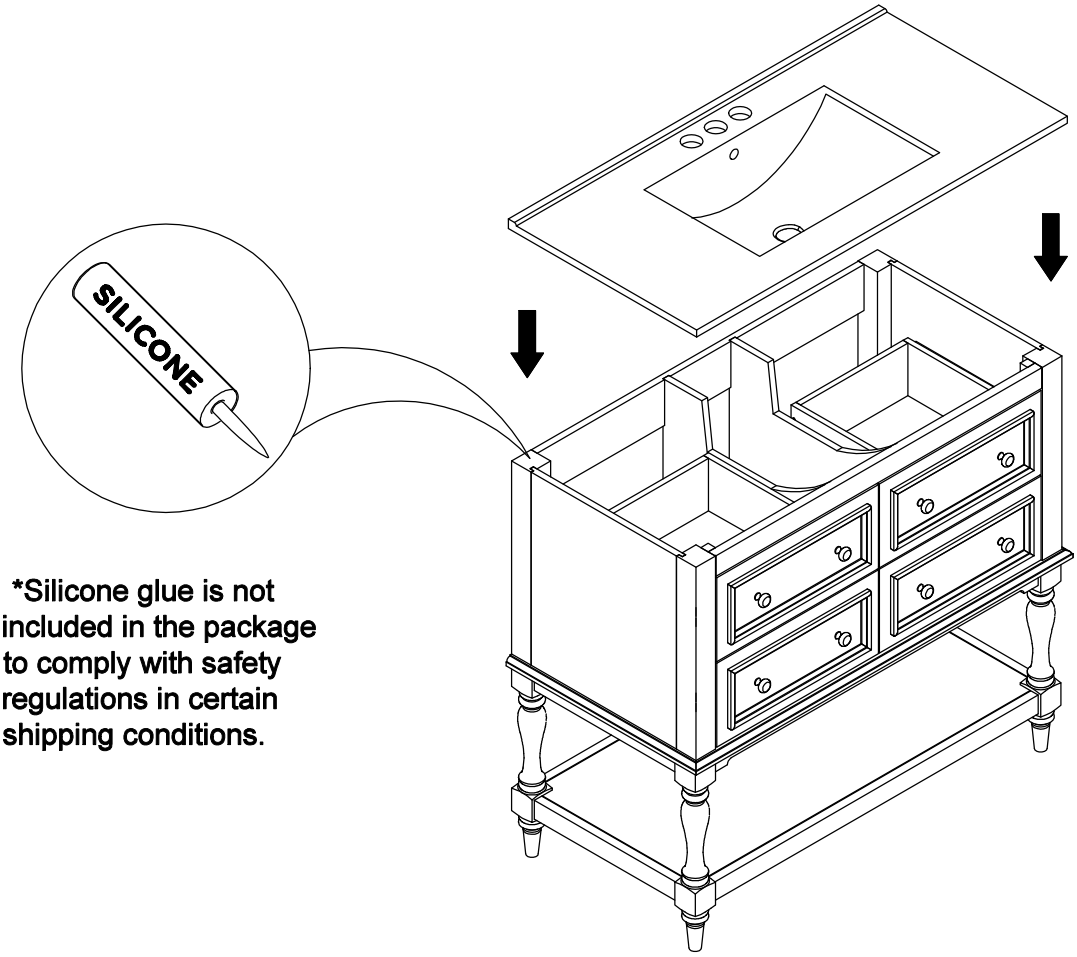

*Silicone glue is not included in the package to comply with safety regulations in certain shipping conditions.

STEP: 15

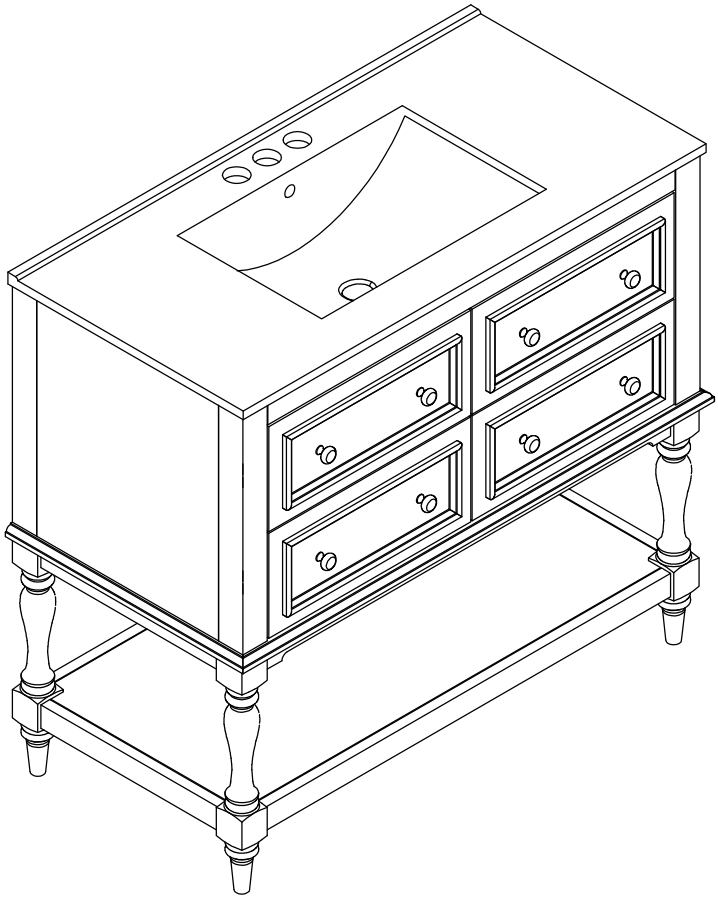

HINGE ADJUSTMENTS

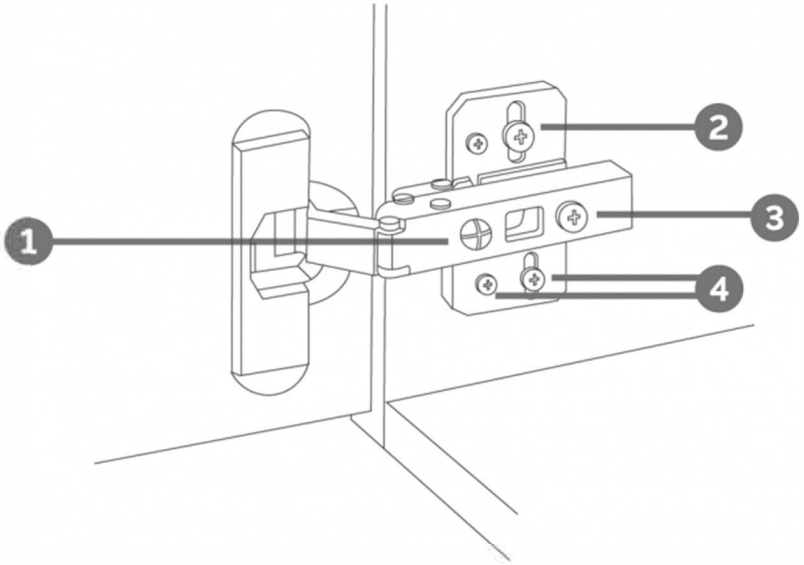

1 Sideways / Tilt adjustment

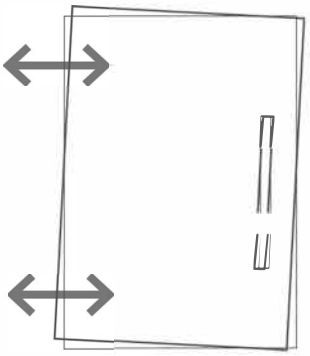

Turn the screw
clockwise to move the door further away from the side of the cabinet
anticlockwise to move the door closer to the side of the cabinet

2 4 Height adjustment

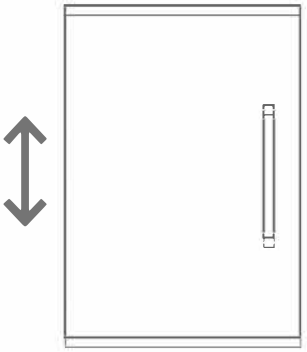

While supporting the weight of the door, turn the screws
clockwise to move the door up
anticlockwise to move the door down

3 Forward and back adjustment

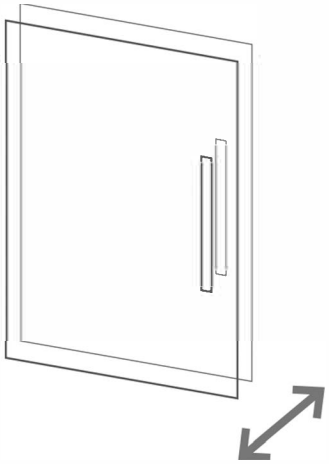

If the gap between the back of the door and the cabinet is too small, and the door may not close fully. Turn the screw
clockwise to decrease the gap between the door and the cabinet
anticlockwise to increase the gap between the door and the cabinet