DIMENSIONS

Rough-In Dimensions

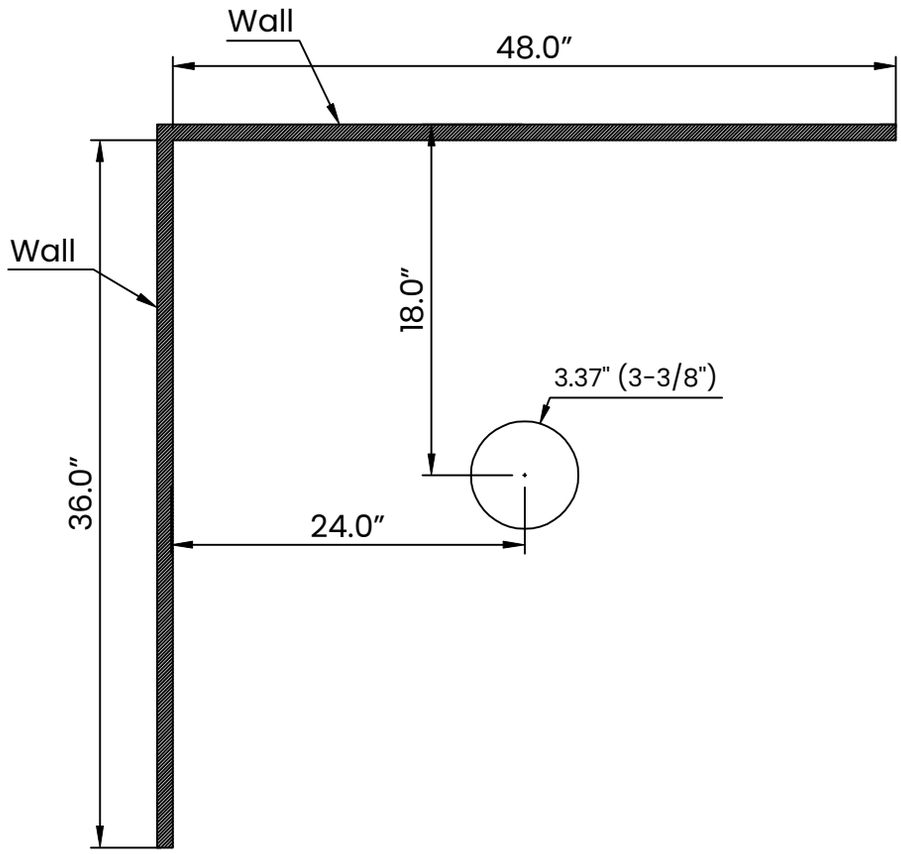

Product Dimensions

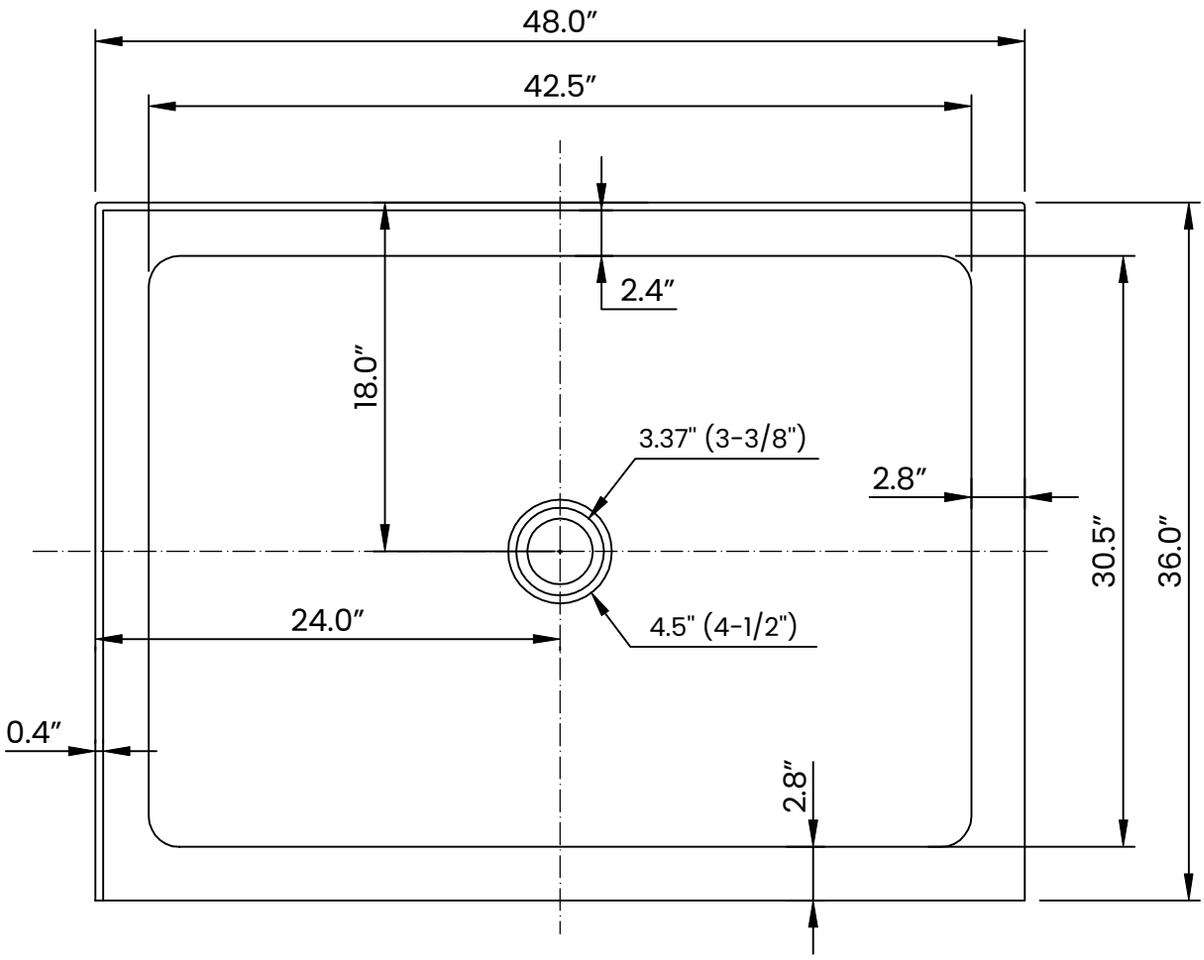

Model number:
NTM-672-48MB-CR

DIMENSIONS

Streamline

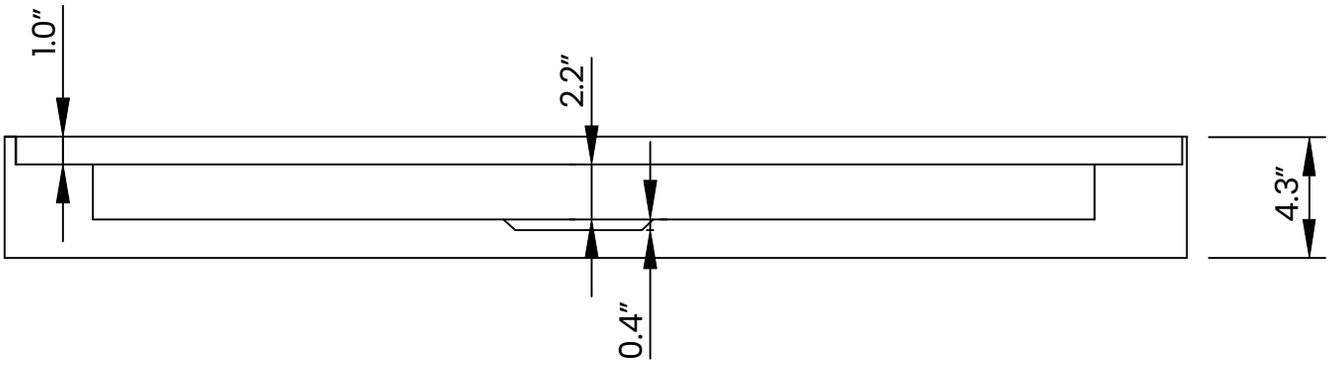

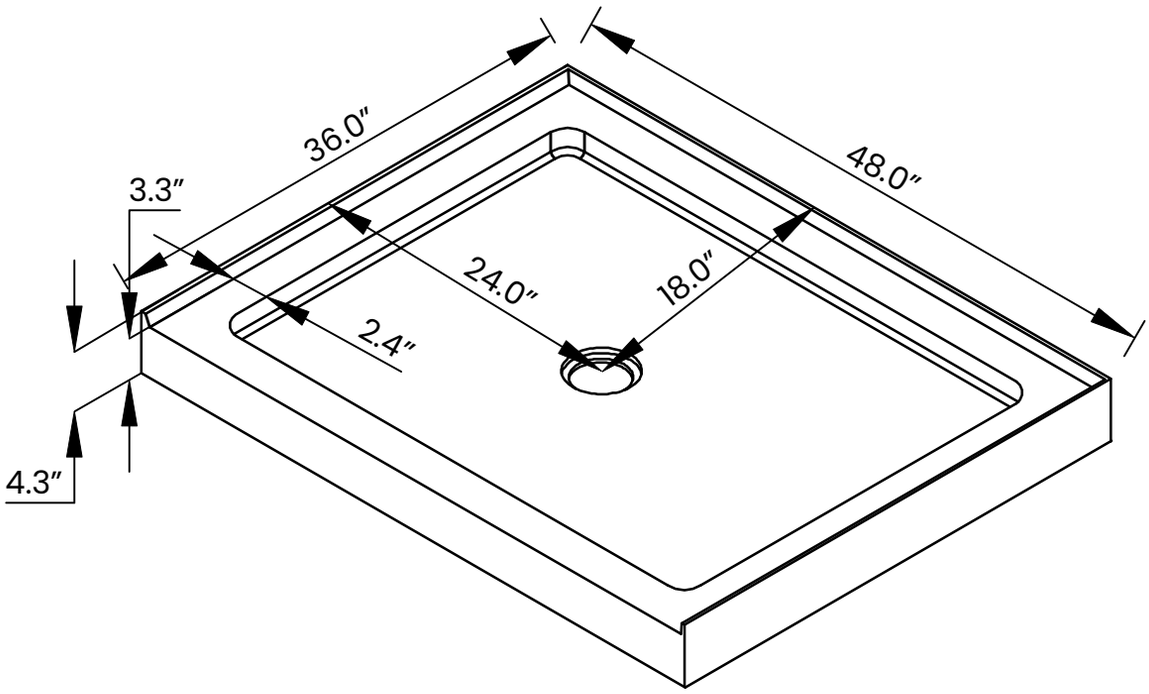
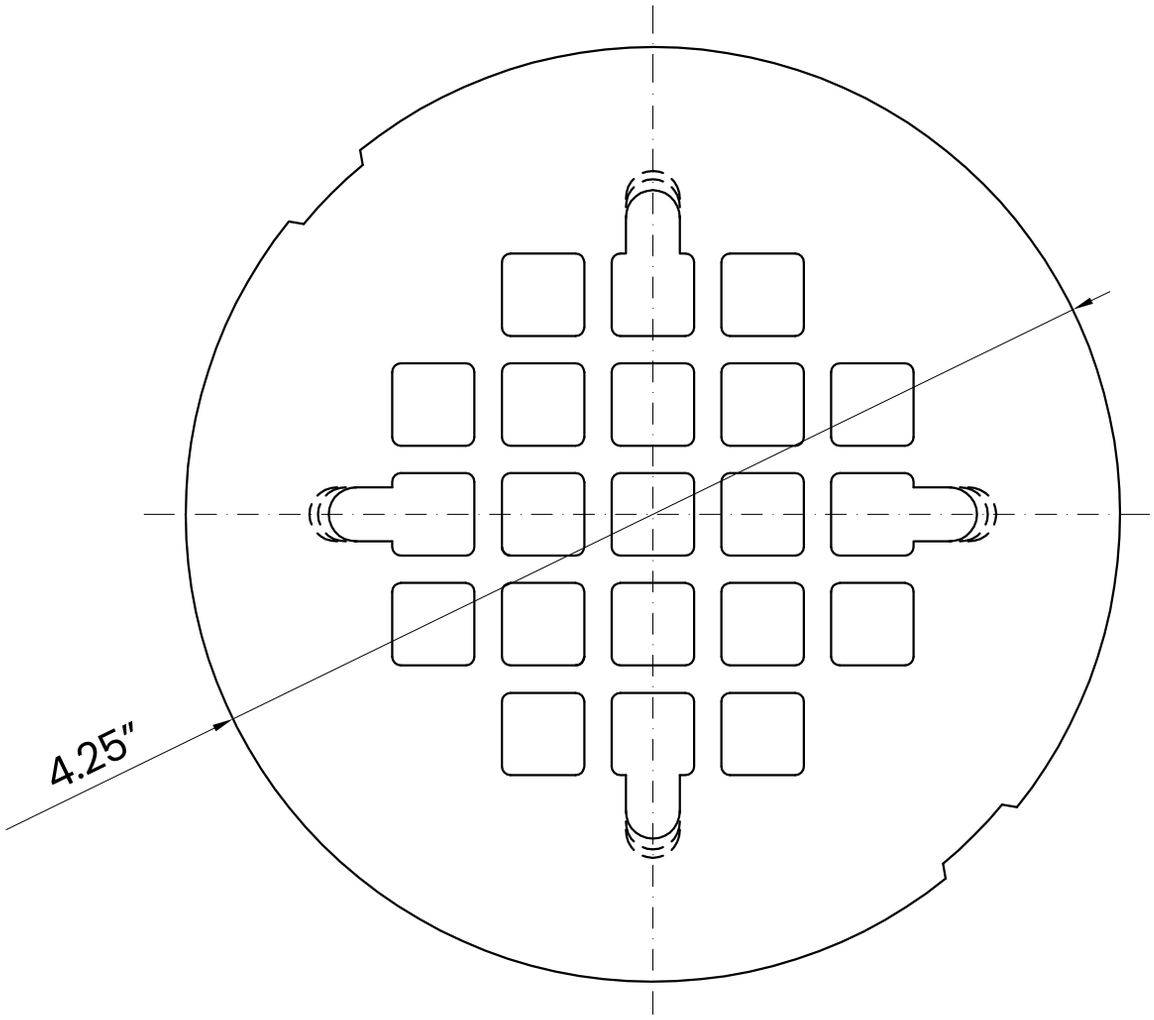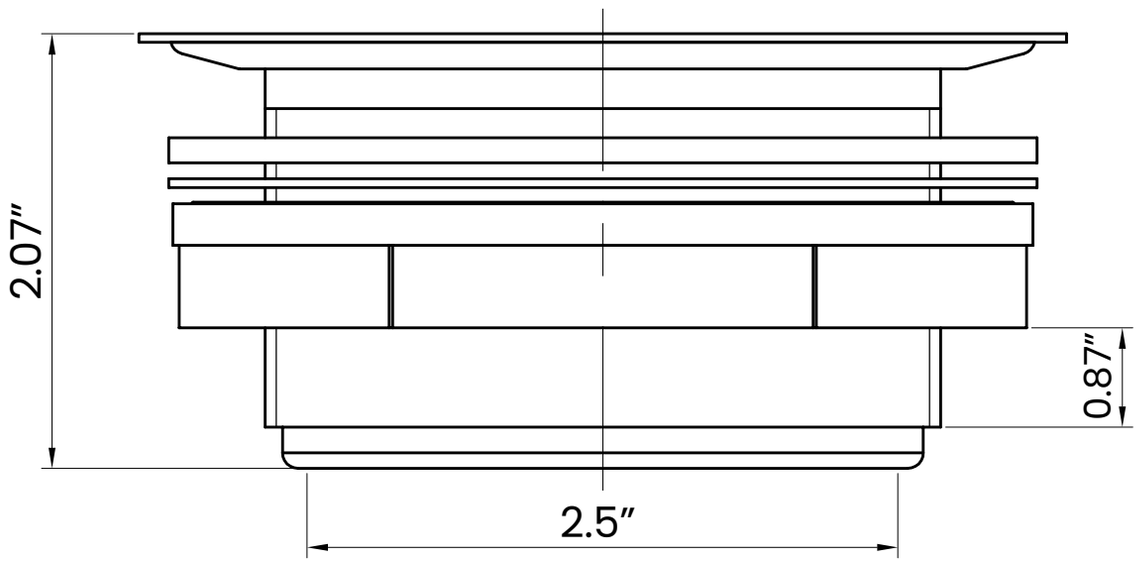
DIMENSIONS