Assembly Instructions

Caution : You must read this before you proceed

Care & Maintenance



- Not for commercial use. For residential use only.



- Furniture may scratch floors. We recommend using furniture pads to protect your floors.



- Do not put hot items directly on furniture surface.



- Do not clean furniture with harsh cleansers or polish.



- Do not place furniture under direct sunlight.



- Do not place furniture near heating or cooling vents.



- Do not write on furniture without a padded barrier to protect the surface.



- Do not place furniture outside . For indoor use only.



- Stains may be removed with mild soap solution and damp cloth.



- Children should not climb or jump on the furniture.



- Dust and pick-up spills using a clean, non-colored, lint-free cloth.

Please look in Leg for hardware pack.

ASSEMBLY INSTRUCTION

ITEM：Kitchen Island Cart

N767P470557

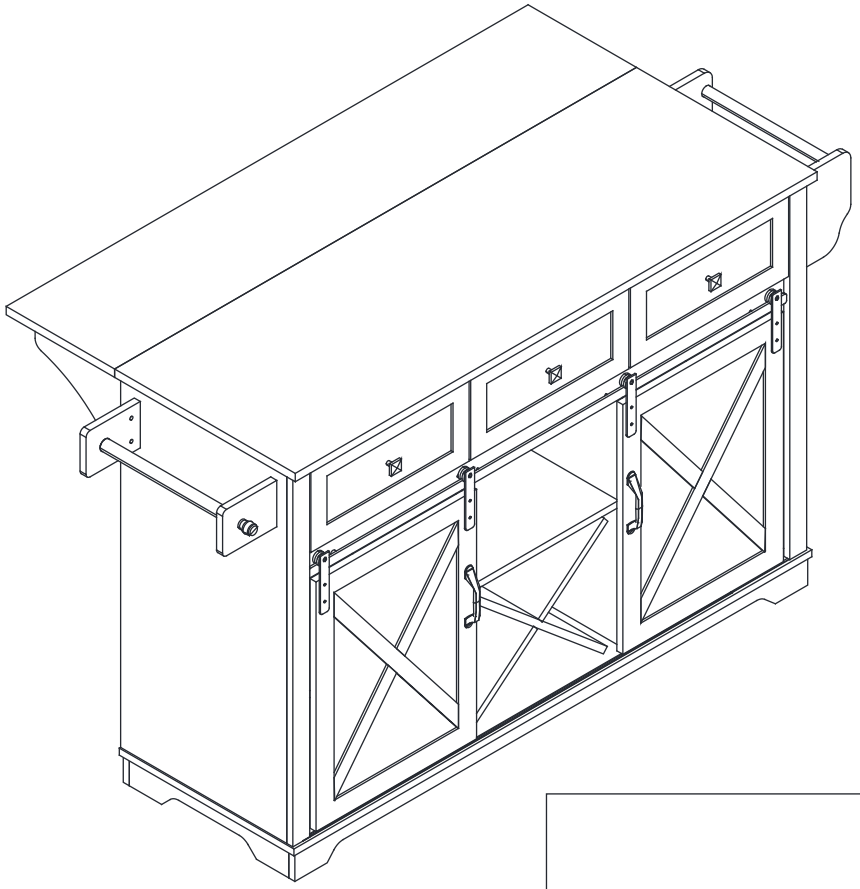

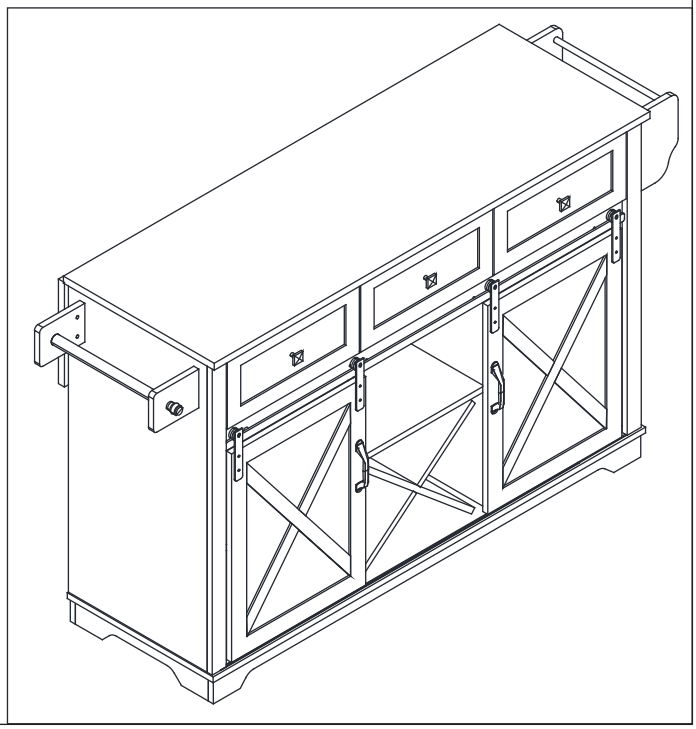

Before Installation

Important-Please read these instructions fully before starting assembly

Thank you for purchasing this quality product.Be sure to check all packing materials carefully for small parts,which may have come loose inside the carton during shipment.Identify and count all items according to the PARTS LIST and/or HARDWARE LIST shown below.Check you have all the components and tools listed on the following pages.

- We recommend that you assemble this product with the assistance of another person;this will make the assembly easier,and will help eliminate damage to the product or injury to persons during assembly.
- Please do not over tighten screws or bolts until the assembly is completed.
- Keep children and animal away from the work area,small parts could choke if swallowed.·Please put all parts on a non-abrasive floor before assembly,and follow the assembly steps to assemble your newly purchased product correctly and efficiently.

Cam Lock Assembly Instructions

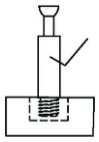

Diagram A

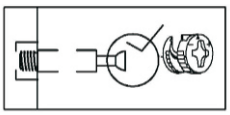

Insert Cam Bolt into hole as shown in diagram A.

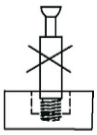

Diagram B

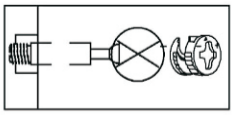

Make sure not to insert the Cam Bolt:
Too deep as shown in figure B as this will cause the Cam Lock to be misaligned and unable to interlock properly.

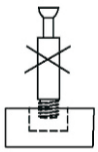

Diagram C

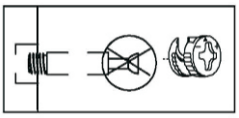

Also avoid inserting the Cam Bolt too close to the surface of the hole as shown in figure C,as this will cause the Cam Lock to be too loose,and not interlock properly.

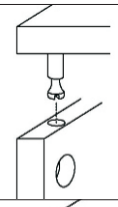

Connect the panels together.

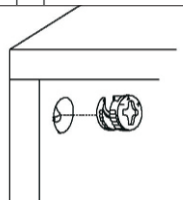

ARROW SIGN

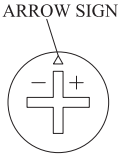

Insert the Cam Lock so the side opening fits over the head of the Cam Bolt.

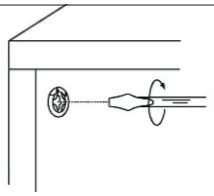



To tighten the Cam Lock,turn it clockwise on half a turn with a flat screwdriver.
*Do not use an automatic screwdriver as it may bend or break if too much power is imposed.

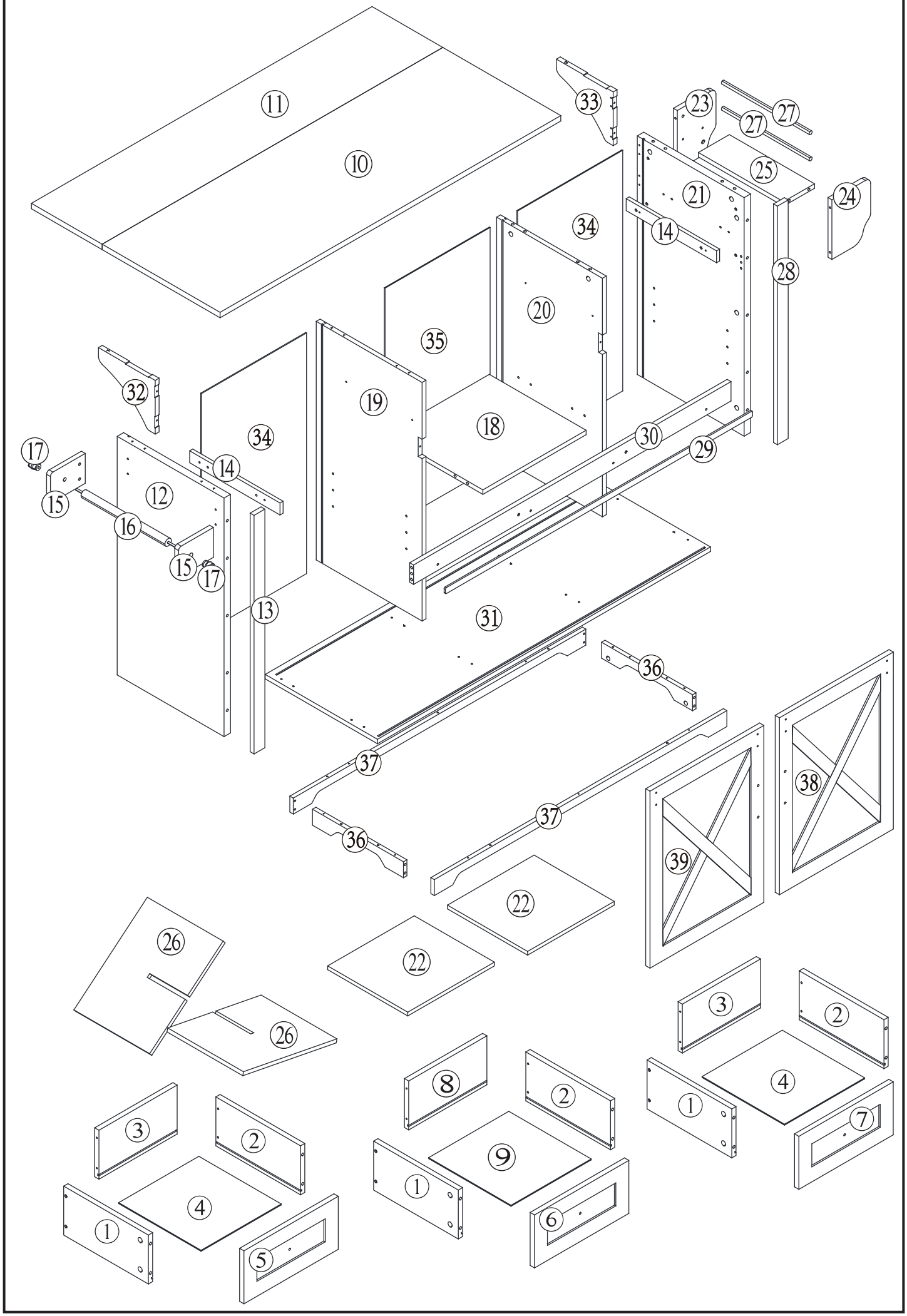
11
10
33
23
27
27
25
24
21
34
14
28
20
35
32
19
18
34
30
29
17
14
12
15
16
15
17
13
31
36
37
38
37
36
39
22
22
26
26
3
2
4
1
7
8
2
9
1
6
3
2
4
1
5

N767P470557

PARTS

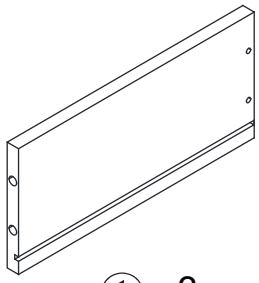

① x 3

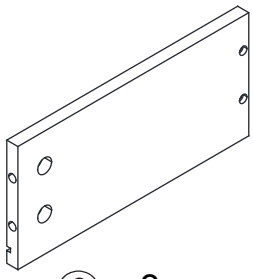

② x 3

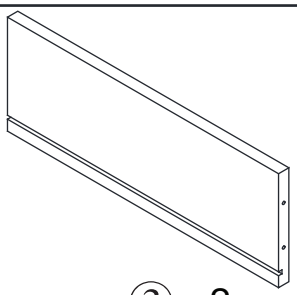

③ x 2

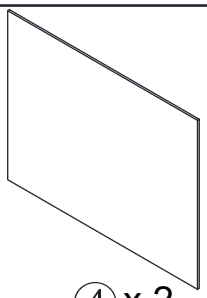

④ x 2

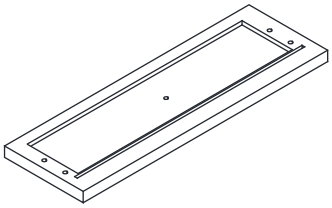

⑤ x 1

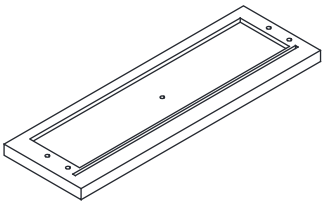

⑥ x 1

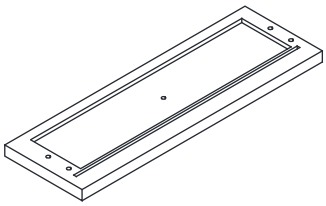

⑦ x 1

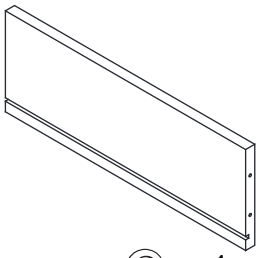

⑧ x 1

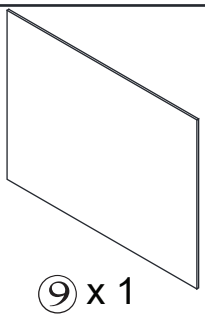

⑨ x 1

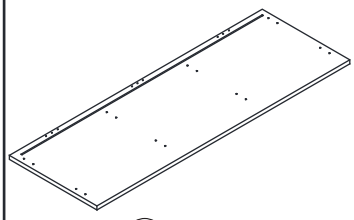

⑩ x 1

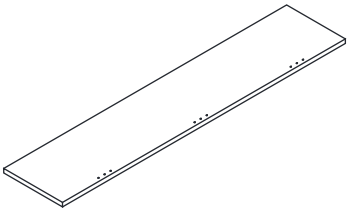

⑪ x 1

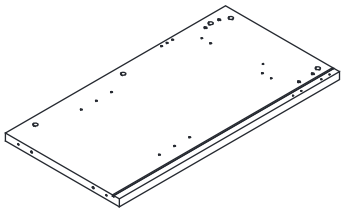

⑫ x 1

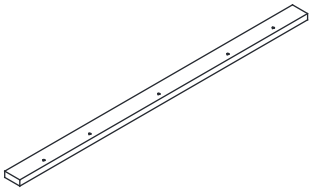

⑬ x 1

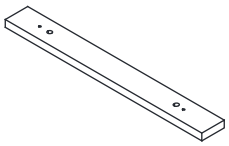

⑭ x 2

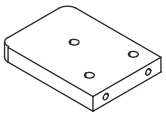

⑮ x 2

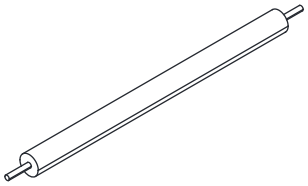

⑯ x 1



⑰ x 2

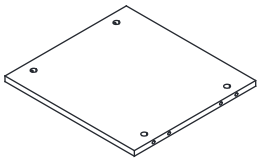

⑱ x 1

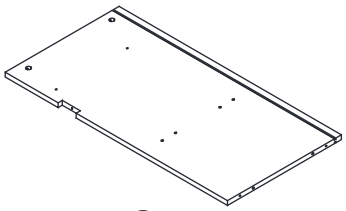

⑲ x 1

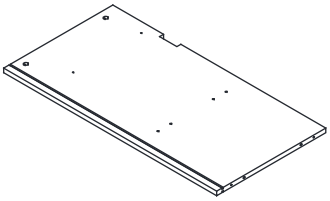

⑳ x 1

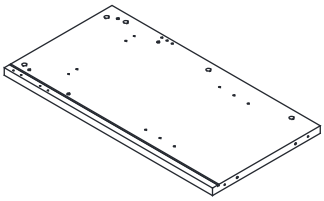

㉑ x 1

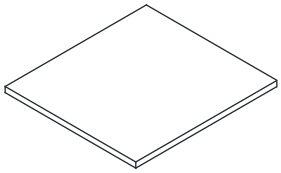

㉒ x 2

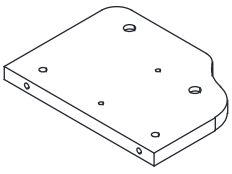

㉓ x 1

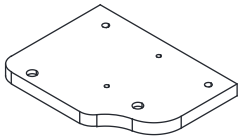

㉔ x 1

PARTS

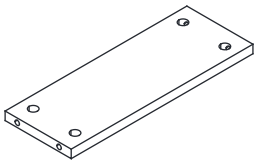 ㉕ x 1	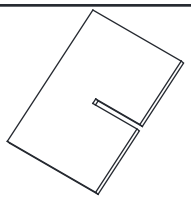 ㉖ x 2	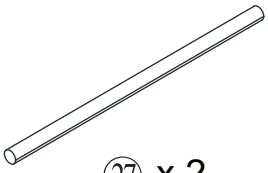 ㉗ x 2	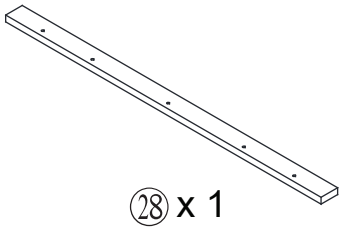 ㉘ x 1
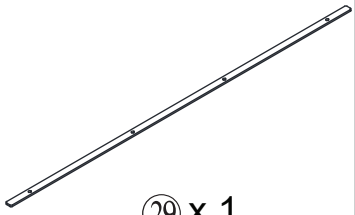 ㉙ x 1	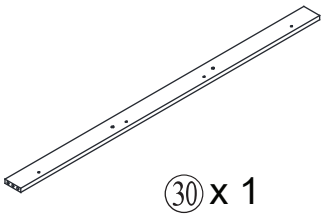 ㉚ x 1	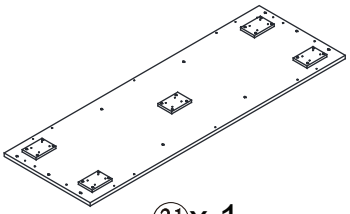 ㉛ x 1	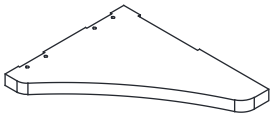 ㉜ x 1
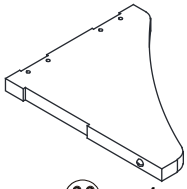 ㉝ x 1	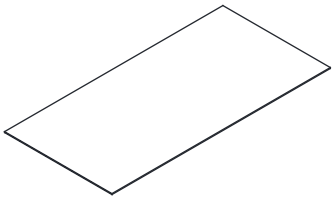 ㉞ x 2	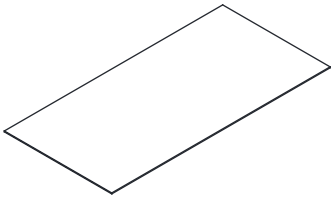 ㉟ x 1	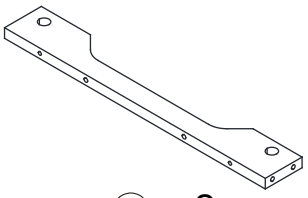 ㊱ x 2
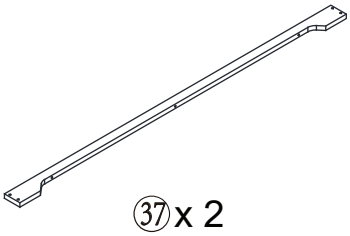 ㊲ x 2	 ㊳ x 1	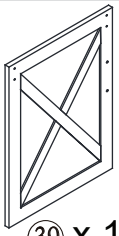 ㊴ x 1	

HARDWARE

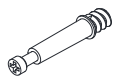 A x 40 +2	 B x 40 +2	 Φ6x30mm C x 44 +2	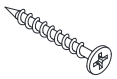 Φ4x30mm D x 18 +1	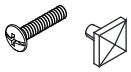 Φ4x6mm E x 3	 Φ4x18mm F x 2	 Φ7x50mm G x 8	 Φ3x12mm H x 70 +3	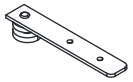 J x 4
 K x 4	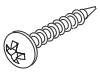 Φ4x40mm L x 10 +1	 Φ3x14mm M x 12+1	 N x 4	 O x12	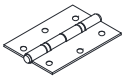 P x 3	 Q x 4	 Φ6x40mm R x 8	 S x 8
 T x 8	 Φ4x12mm U x 28+2	 V x 3	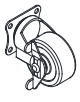 W x 2	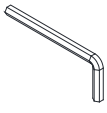 x 1	 CL x 3	 CR x 3	DL x 3	DR x 3

1.

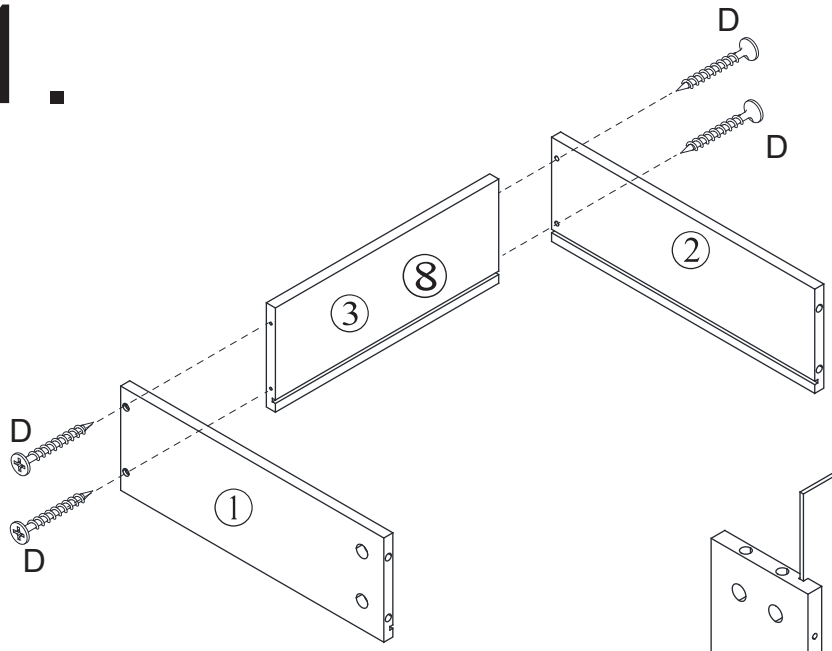

Attached Part (1)&(2) with Part (8),fix by Harware D*4, Then,insert Part(9)

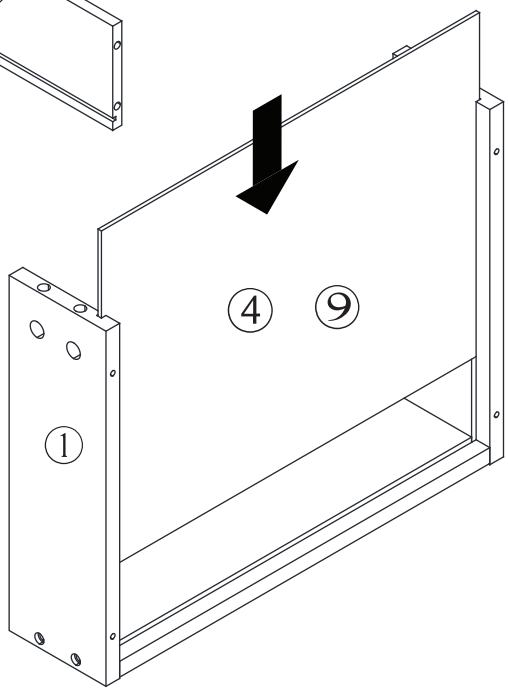

Attached Part (1)&(2) with Part (3),fix by Harware D*4, Then,insert Part(4)
Repeat the above steps.

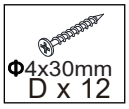

2.

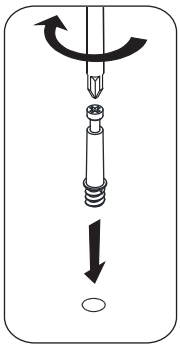

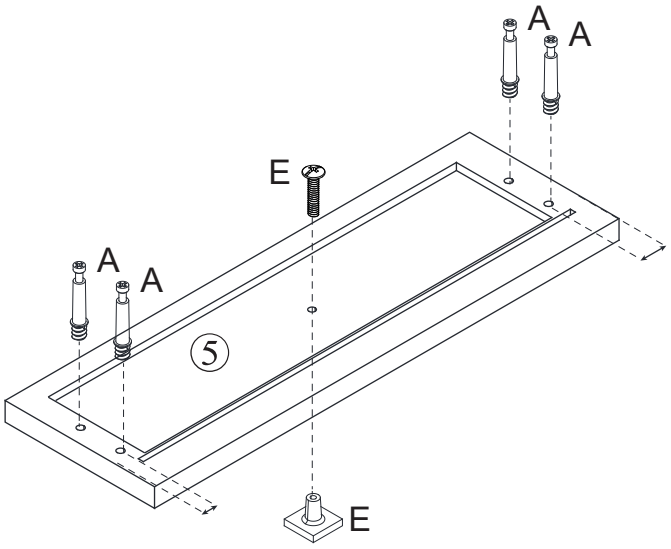

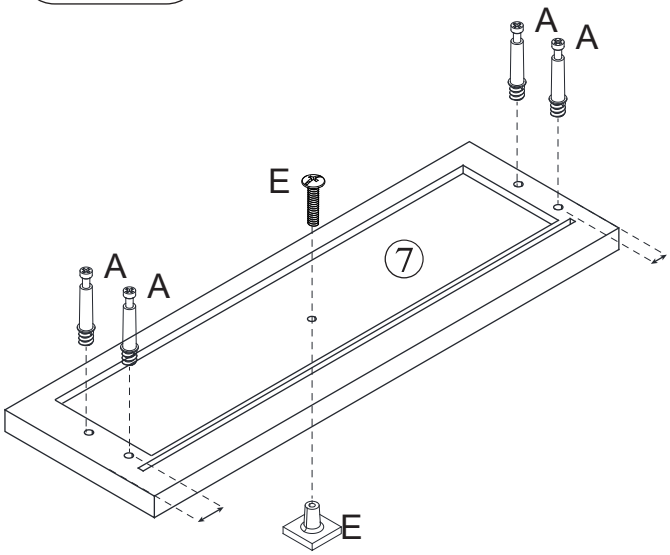

Attached Hardware A *4 with Part(5)&(7)
Attached Handle E and fix it by Hardware E.

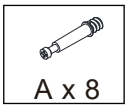



3.

Attached pre-assembly Part(1)(2) with Part (5)fix them by Hardware B*4.

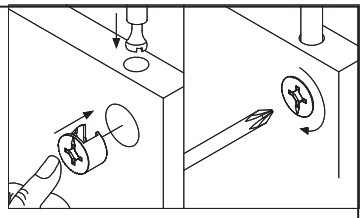

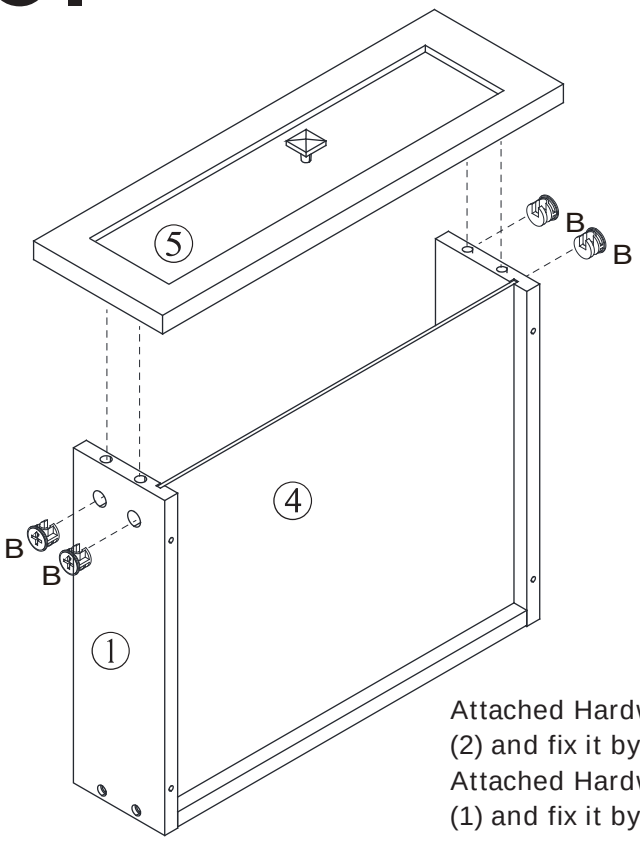

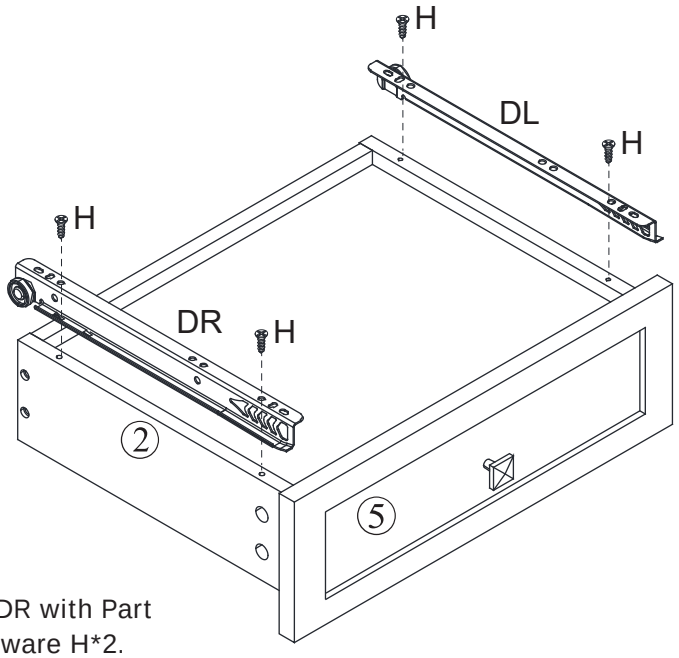

Attached Hardware DR with Part (2) and fix it by Hardware H*2.
Attached Hardware DL with Part (1) and fix it by Hardware H*2.

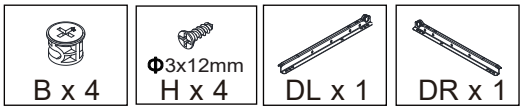

4.

Attached pre-assembly Part(1)(2) with Part (7)fix them by Hardware B*4.

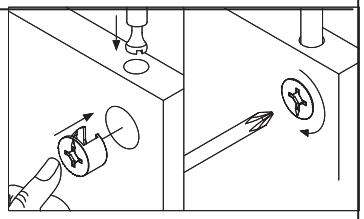

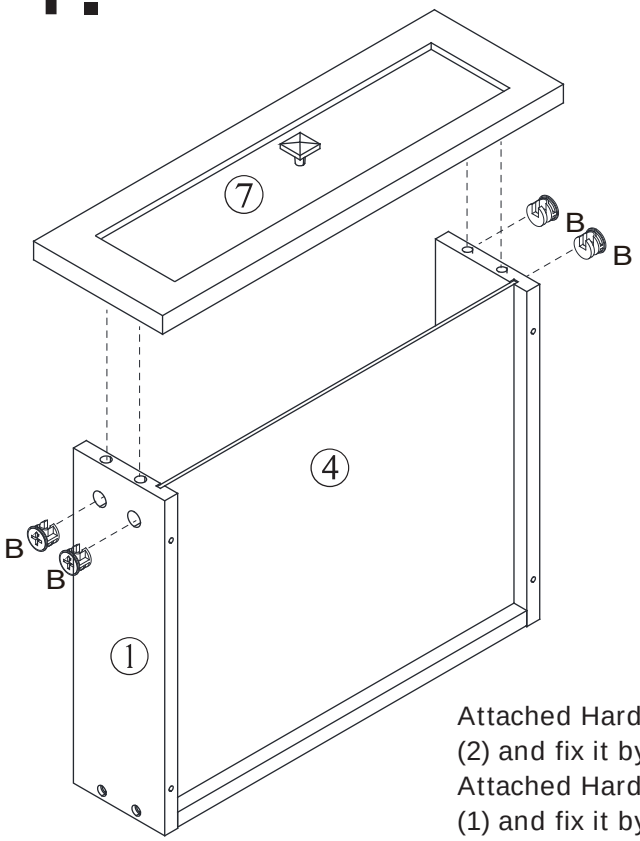

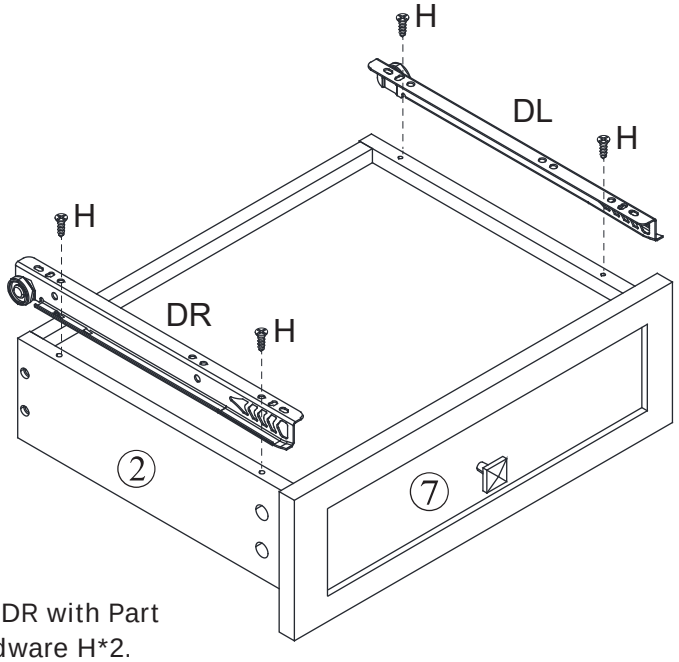

Attached Hardware DR with Part (2) and fix it by Hardware H*2.
Attached Hardware DL with Part (1) and fix it by Hardware H*2.

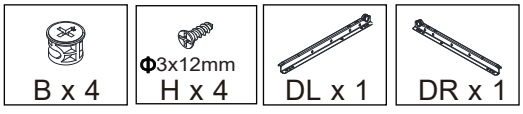

5.

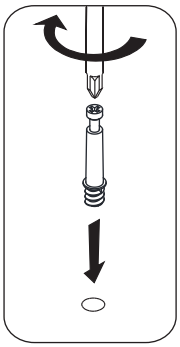

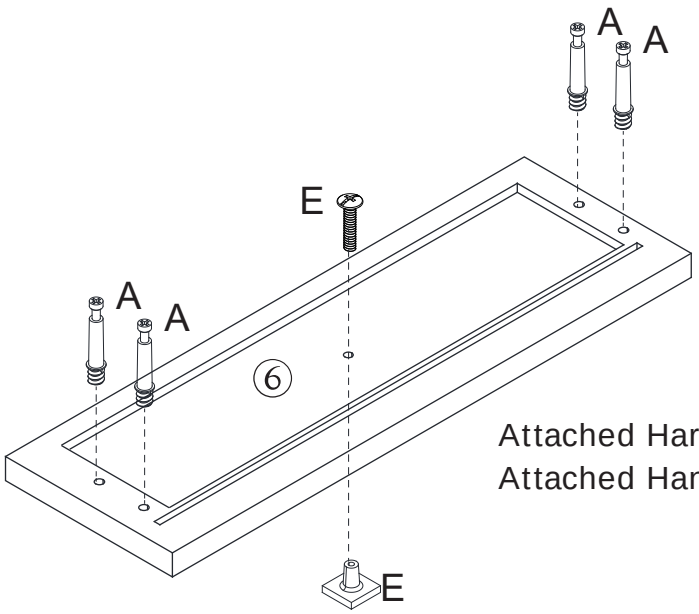

Attached Hardware A *4 with Part(6)
Attached Handle E and fix it by Hardware E.

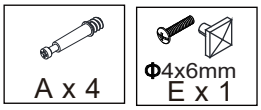

6.

Attached pre-assembly Part(1)(2) with Part (6)fix them by Hardware B*4.

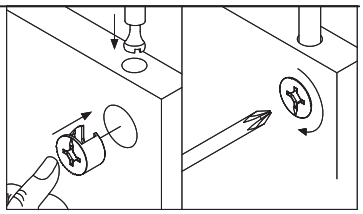

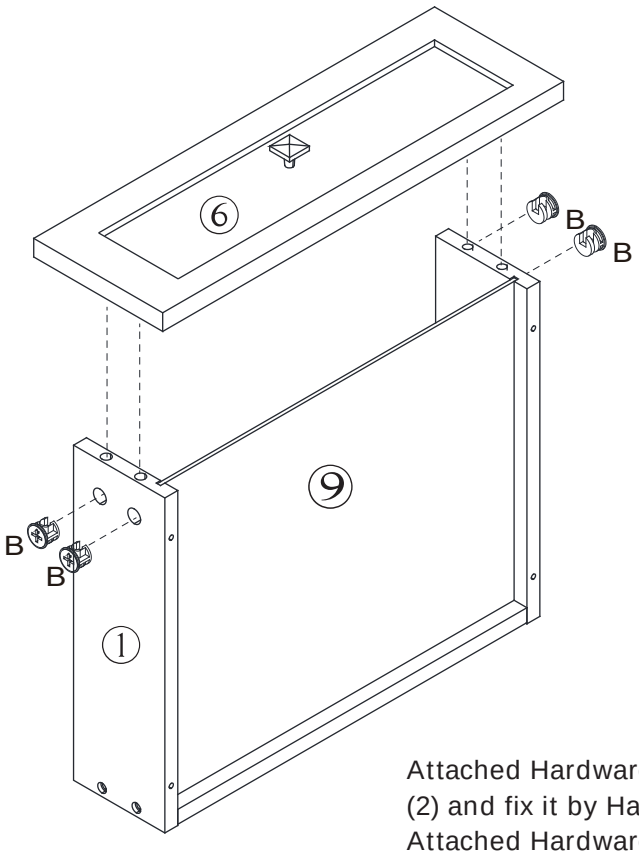

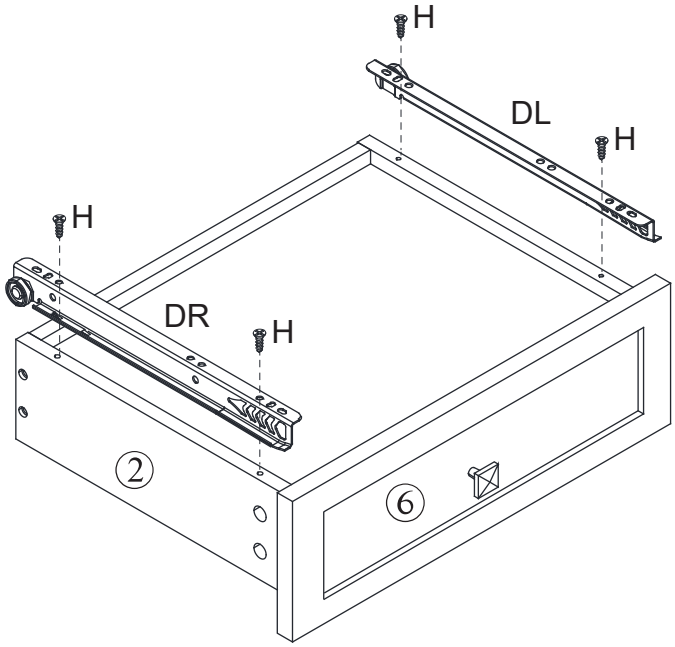

Attached Hardware DR with Part (2) and fix it by Hardware H*2.
Attached Hardware DL with Part (1) and fix it by Hardware H*2.

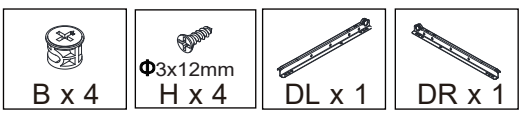

7.

Attached Hardware A*3 with Part (13)

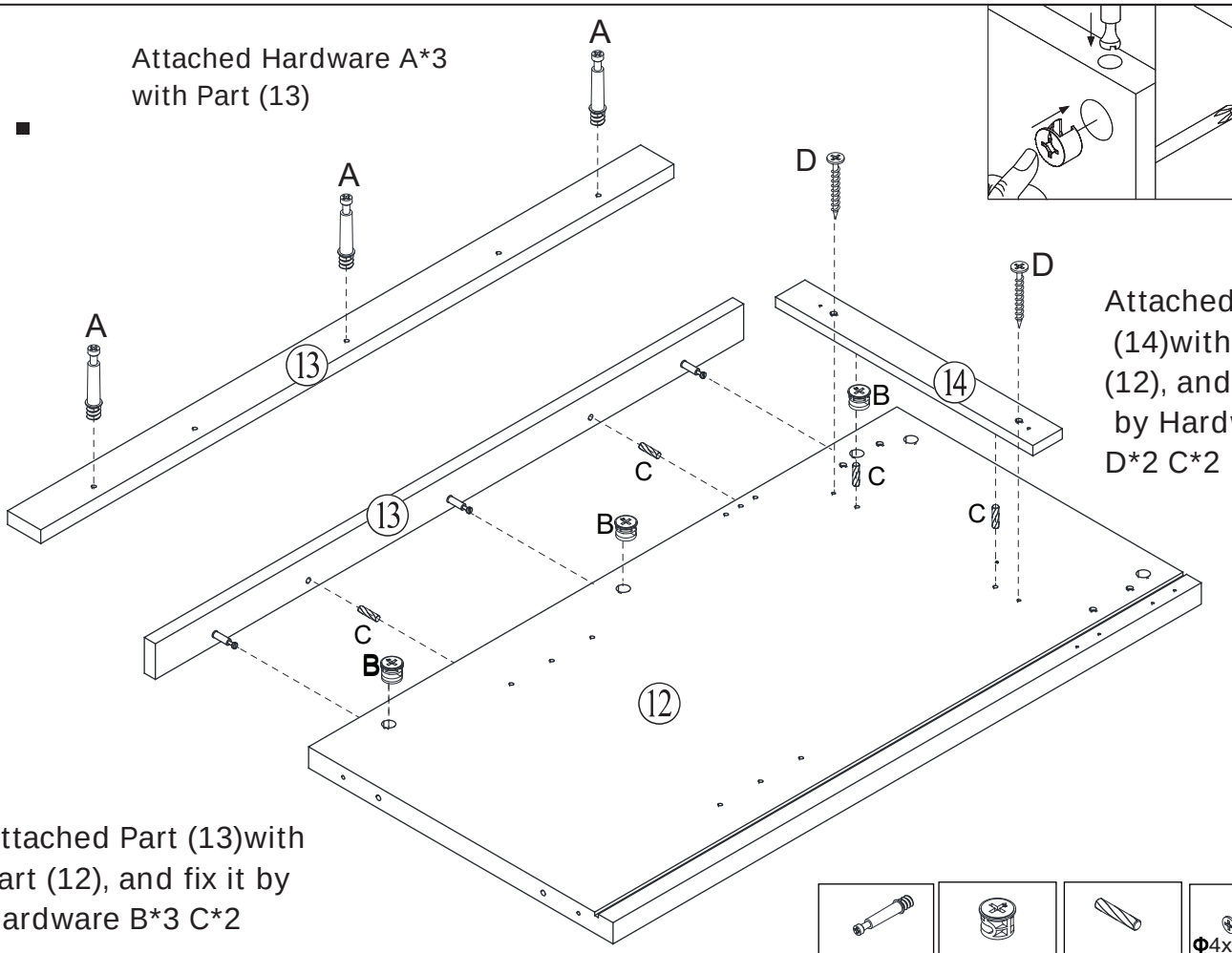

Attached Part (14)with Part (12), and fix it by Hardware D*2 C*2

Attached Part (13)with Part (12), and fix it by Hardware B*3 C*2

8.

Attached Part （15)*2 with Part (16) fix them by Part(17)*2

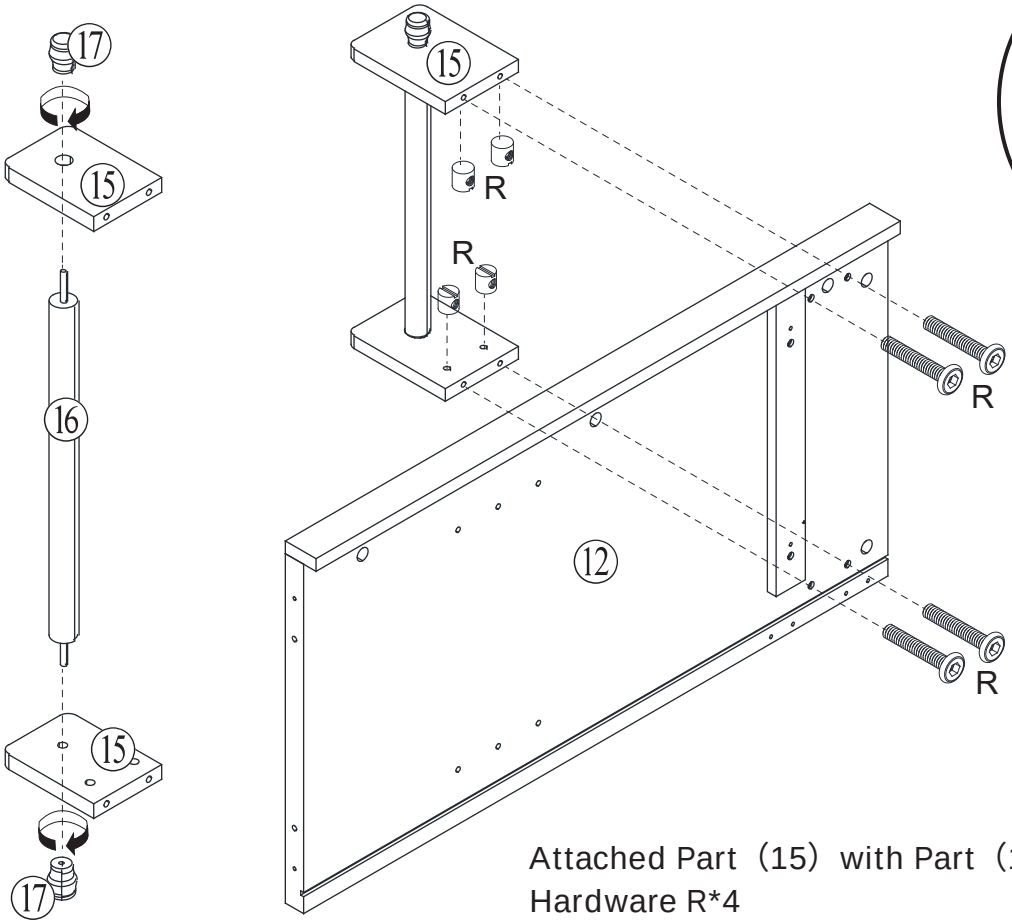

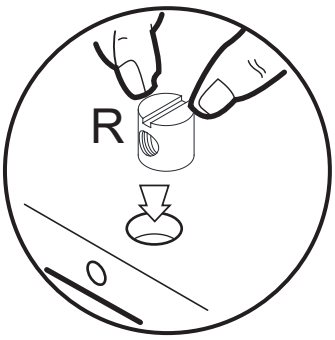

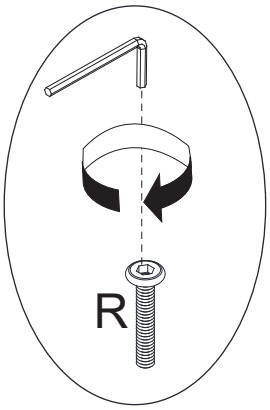

Attached Part（15）with Part（12）by Hardware R*4

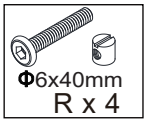

9.

Attached Hardware A with Part (12)
Attached Hardware CL with Part (12)
and fix it by Hardware H*2.

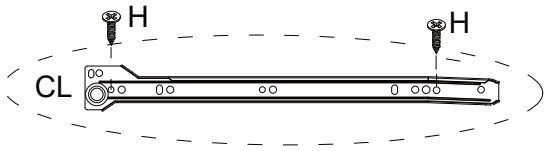

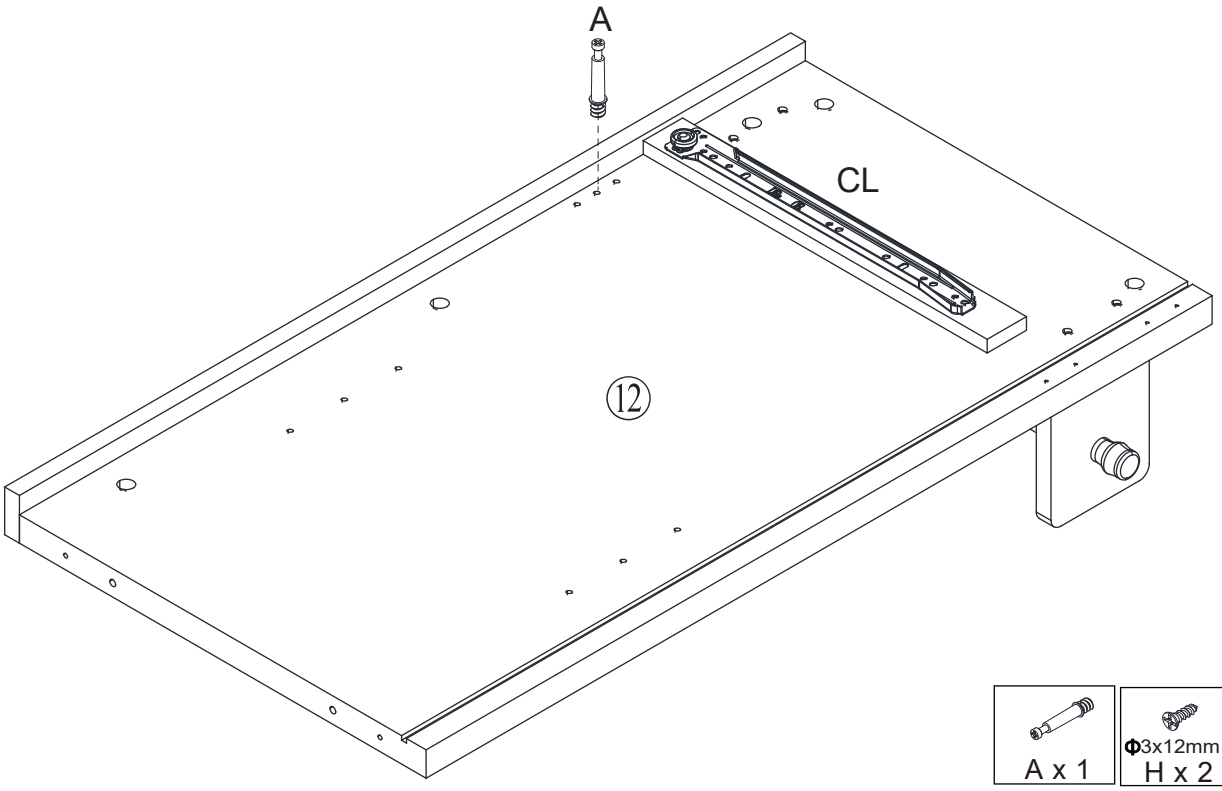

10.

Attached Part
(25)& (24), fix it
by Hardware B*2

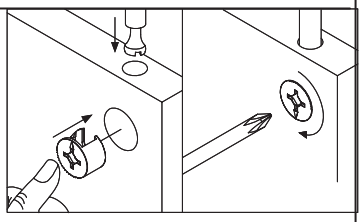

Attached Hardware A *2
with Part (24)

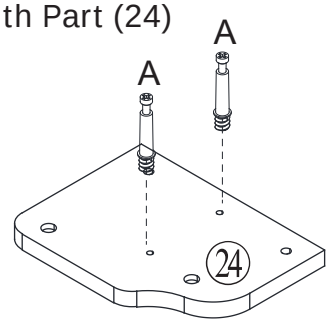

Attached Hardware A *2
with Part (23)

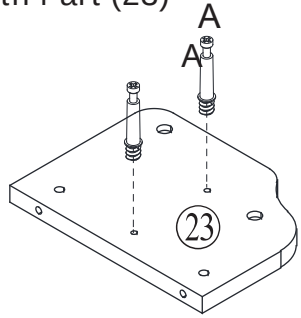

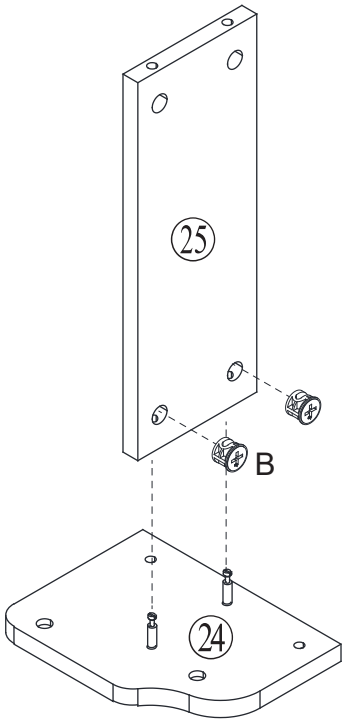

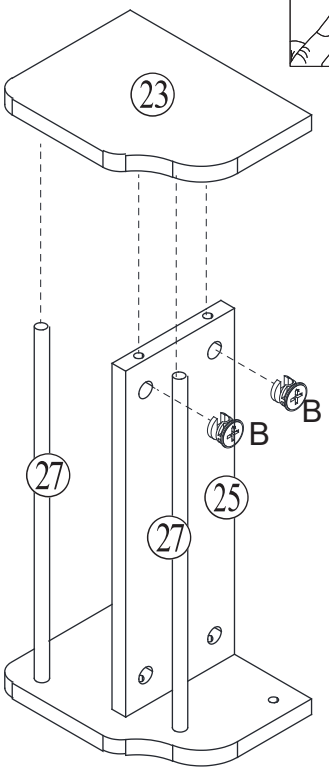

Attached pre
- assembly
(24)(25)&(27)
*2with Part
(23), and fix it
by Hardware
B *2

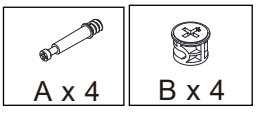

11.

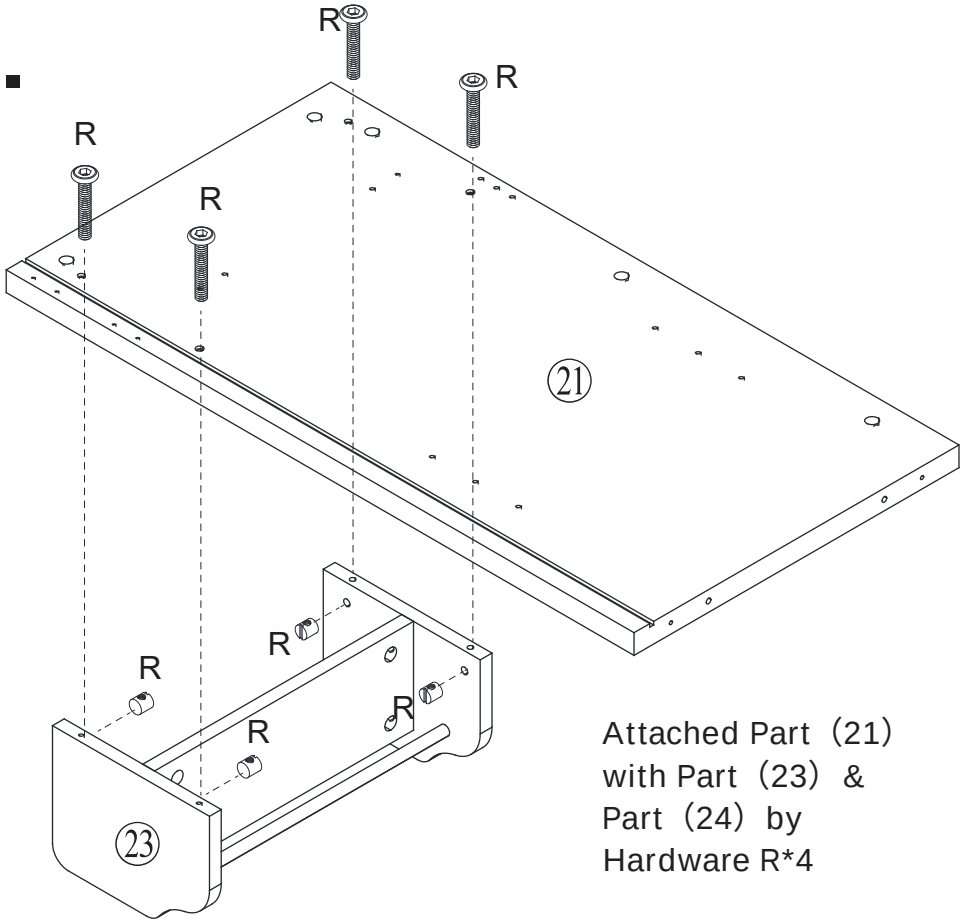

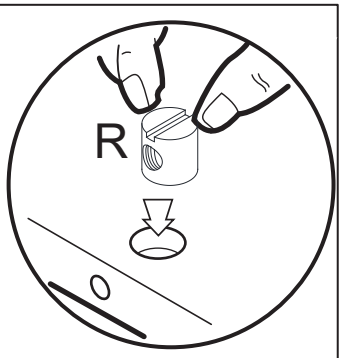

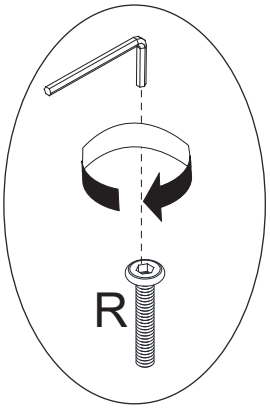

Attached Part（21）
with Part（23）&
Part（24）by
Hardware R*4



12.

Attached Hardware A*3 with Part (28)

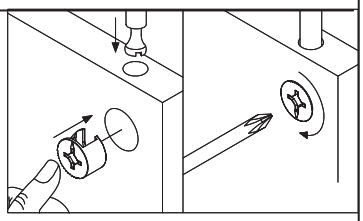

Attached Part (21)
with Part(28) fix them
by B*3 and C*2.

Attached Part (21)
with Part(22) fix them
by D*2 and C*2.

13.

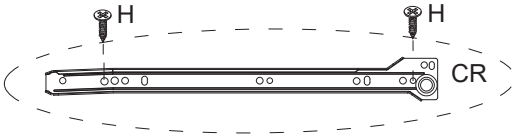

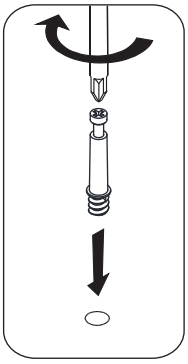

Attached Hardware A
with Part (21)
Attached Hardware CR
with Part (21) and fix it by
Hardware H*2.

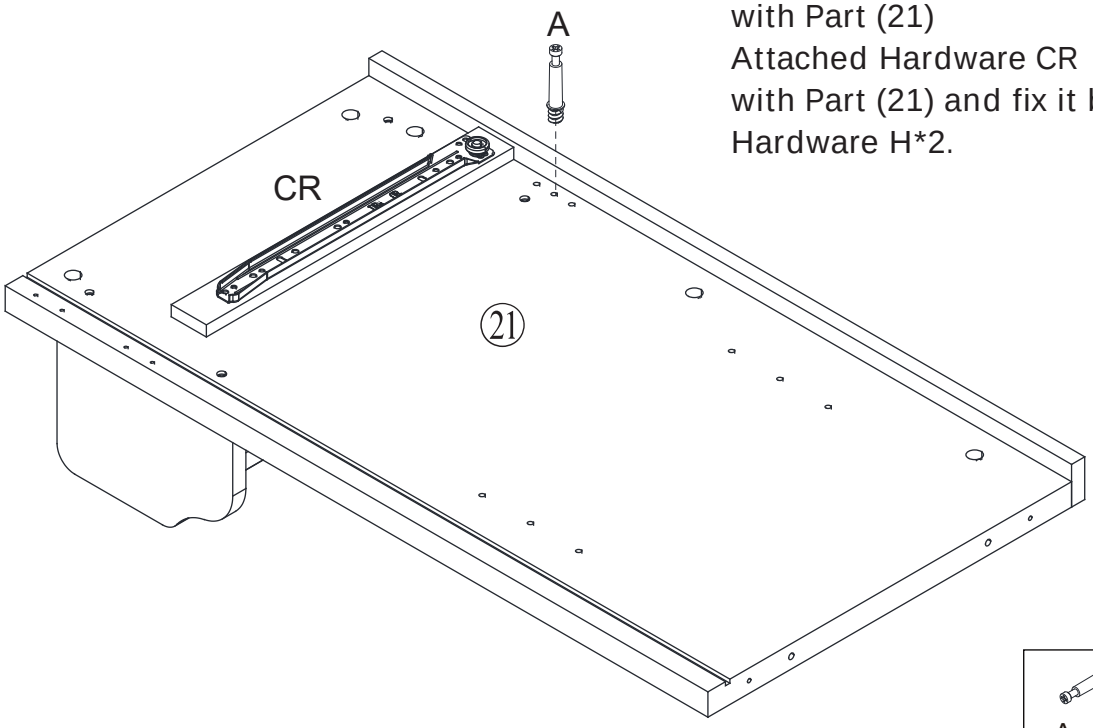



14.

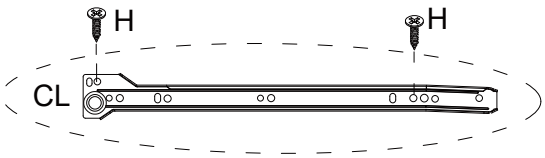

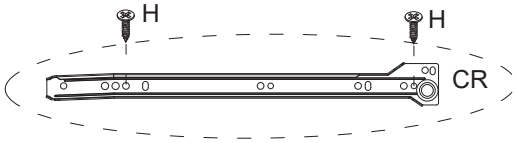

Attached Hardware A*2
with Part (19)
Attached Hardware CL
with Part (19) and fix it by
Hardware H*2
Flip this Pannel 180°

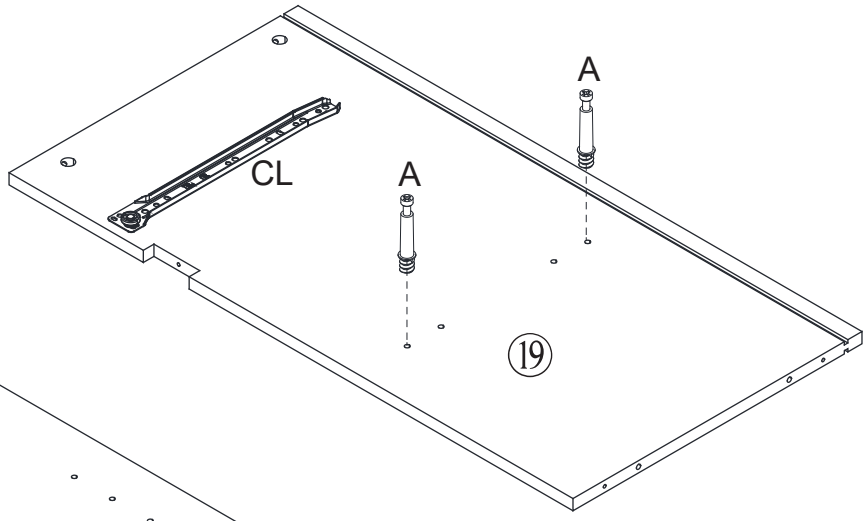

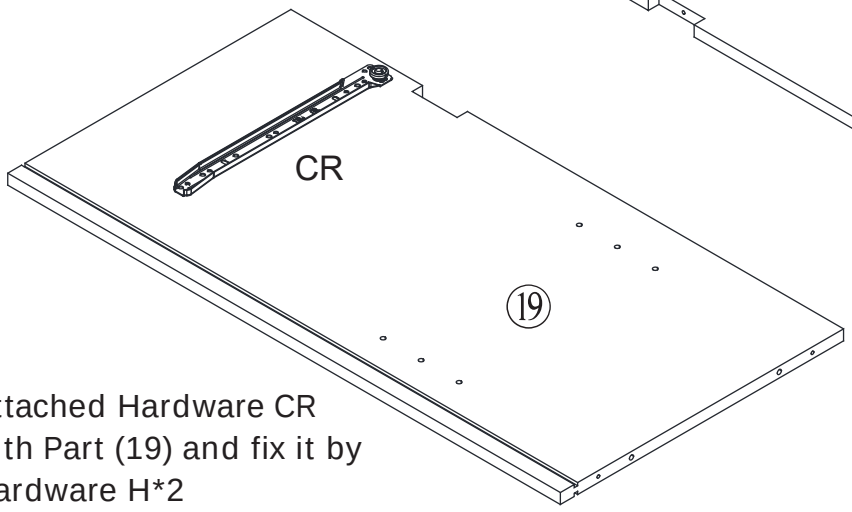



Attached Hardware CR
with Part (19) and fix it by
Hardware H*2

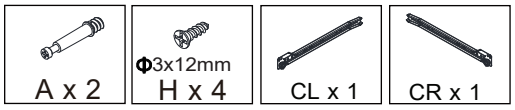

15.

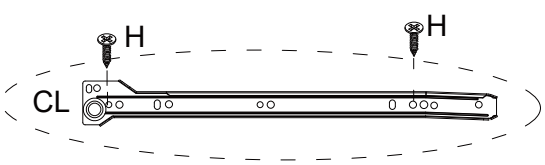

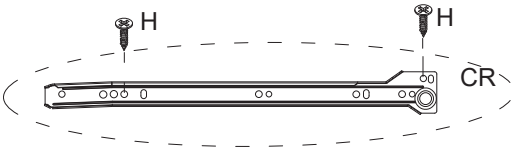

Flip this Pannel 180°
Attached Hardware A*2
with Part (20)
Attached Hardware CR
with Part (20) and fix it by
Hardware H*2

Attached Hardware CL
with Part (20) and fix it by
Hardware H*2

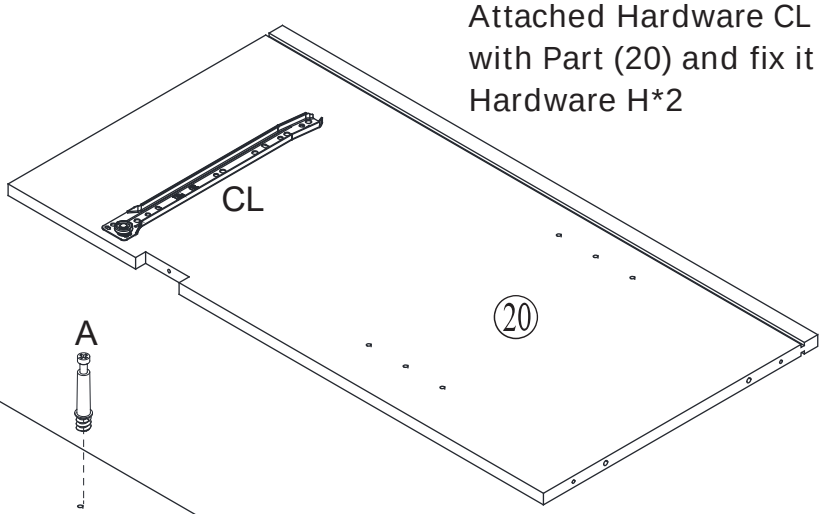

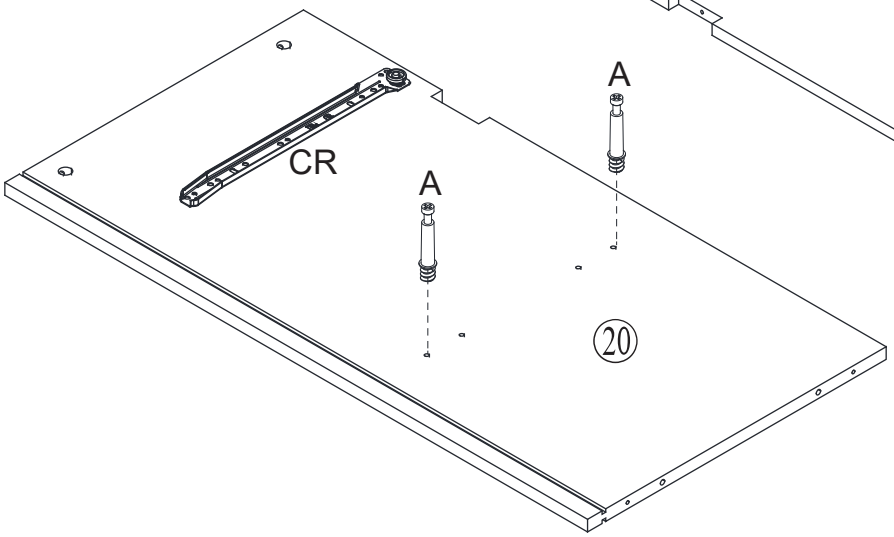

180

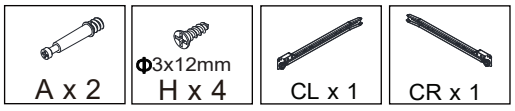

16.

Attached Part (19)&Part(20)
with Part(18) and fix them
by B*4 & C*4 .

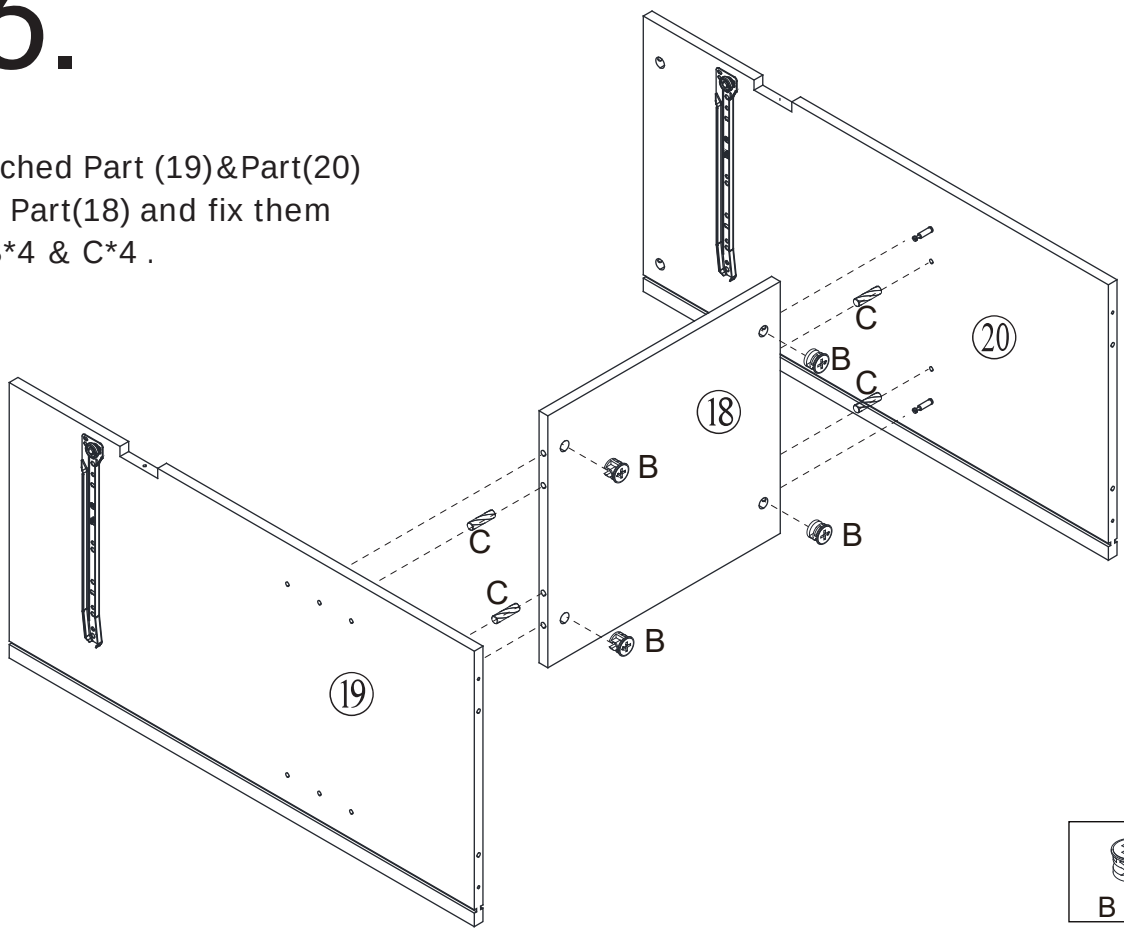

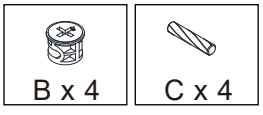

17.

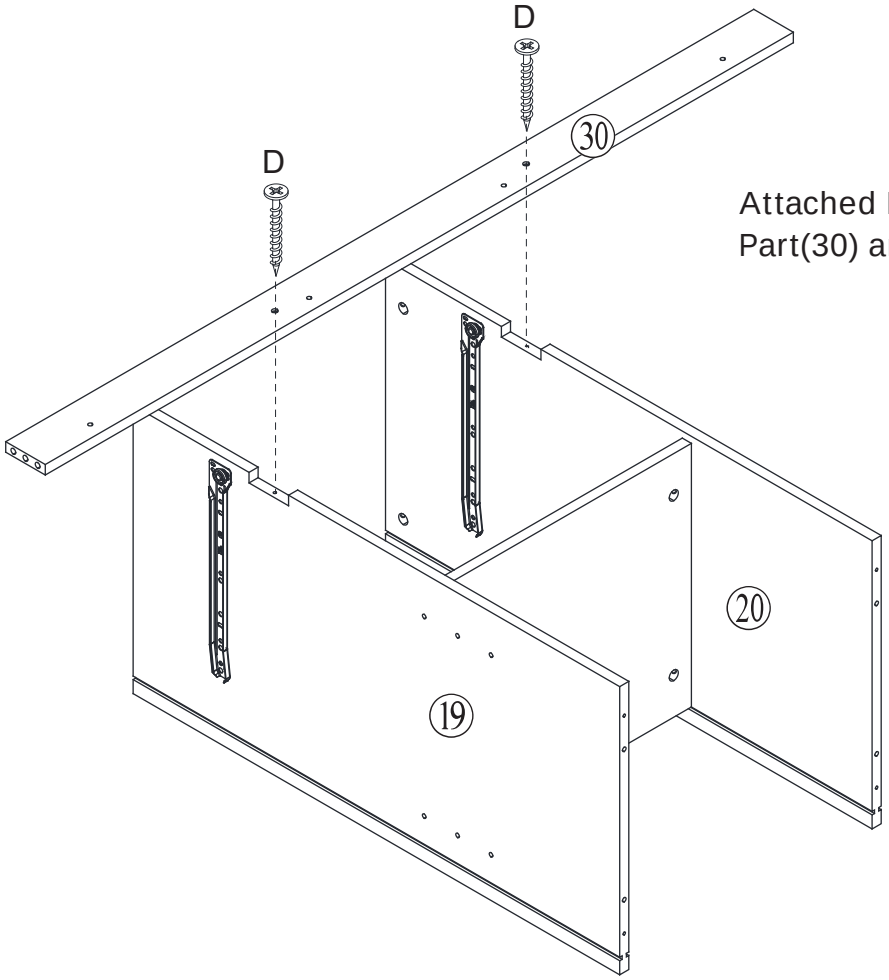

Attached Part (19)&Part(20) with Part(30) and fix them by D*2 .

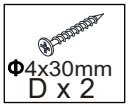

18.

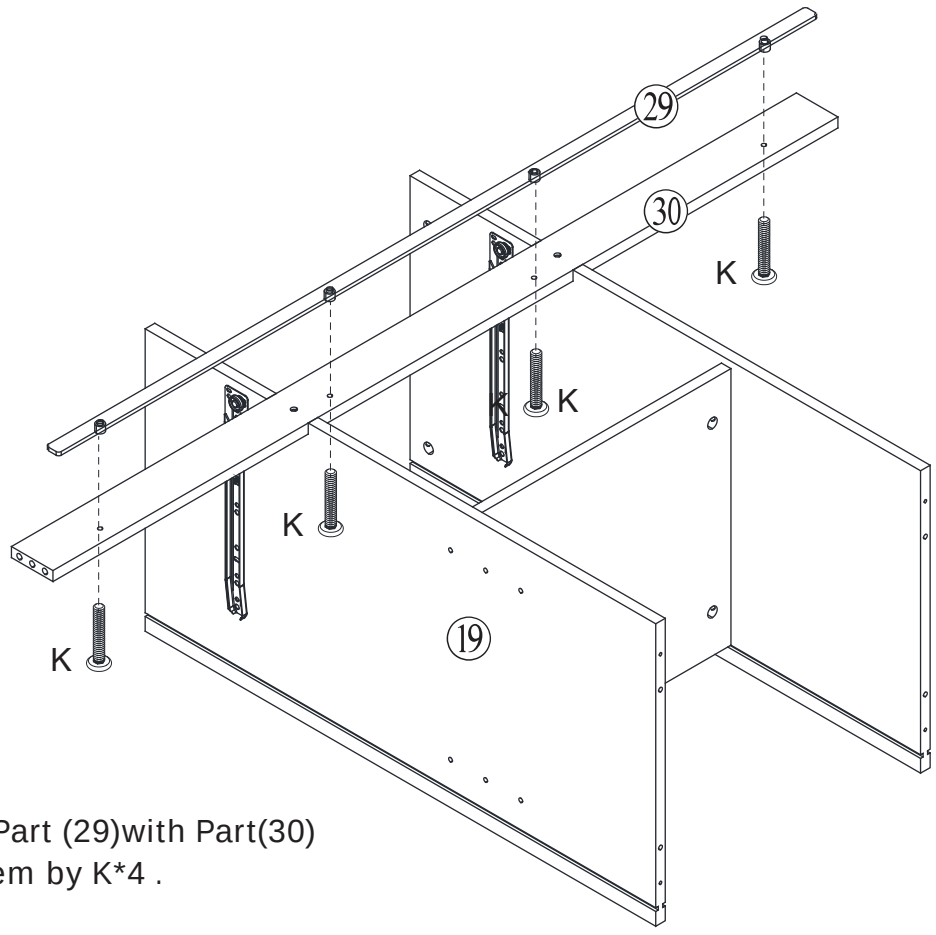

Attached Part (29)with Part(30) and fix them by K*4 .

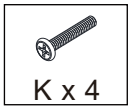

19.

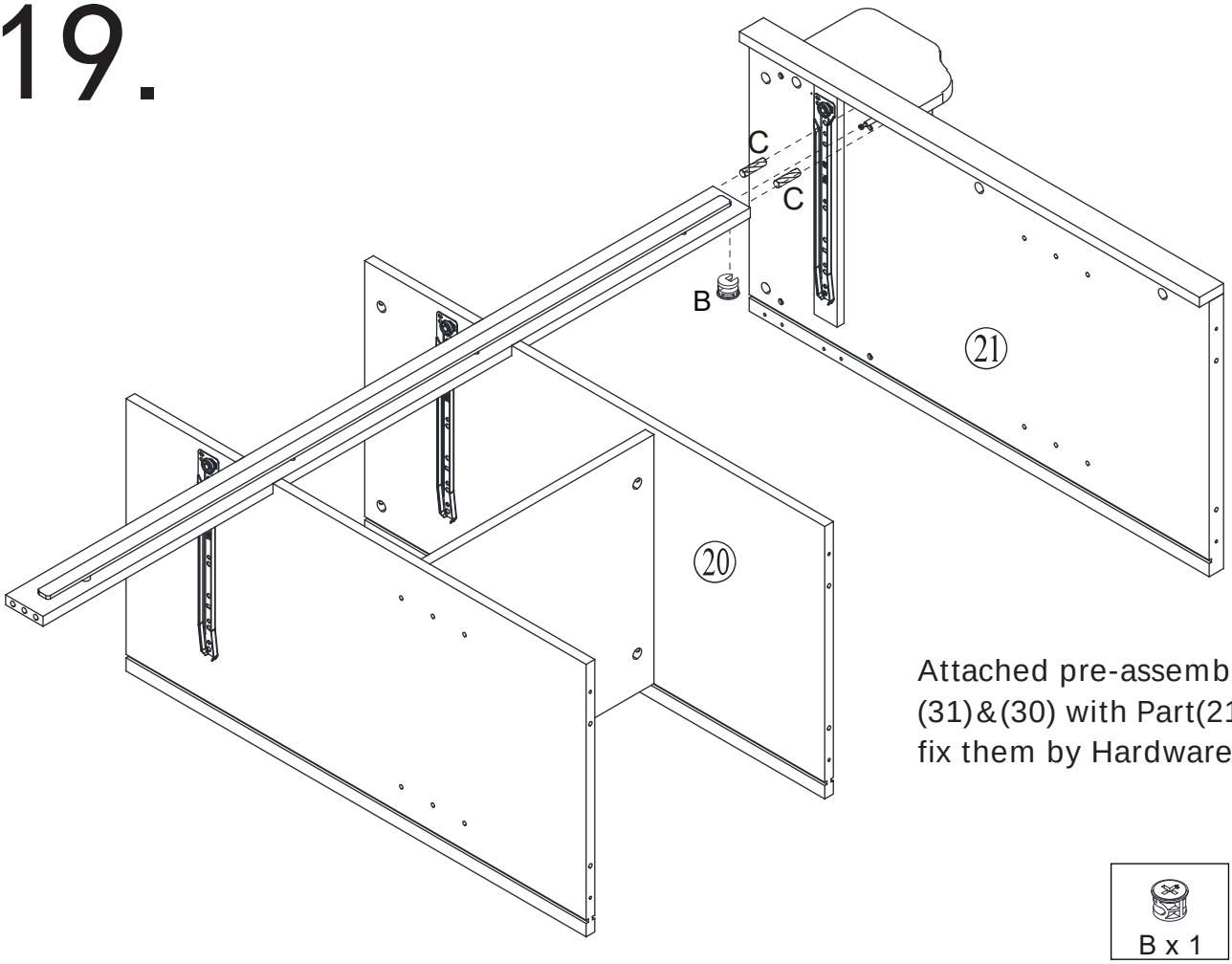

Attached pre-assembly Part (31)&(30) with Part(21) and fix them by Hardware C*2 B*1

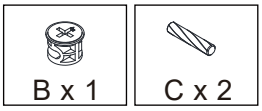

20.

Attached pre-assembly Part (31)&(30) with Part(12) and fix them by Hardware C*2 B*1

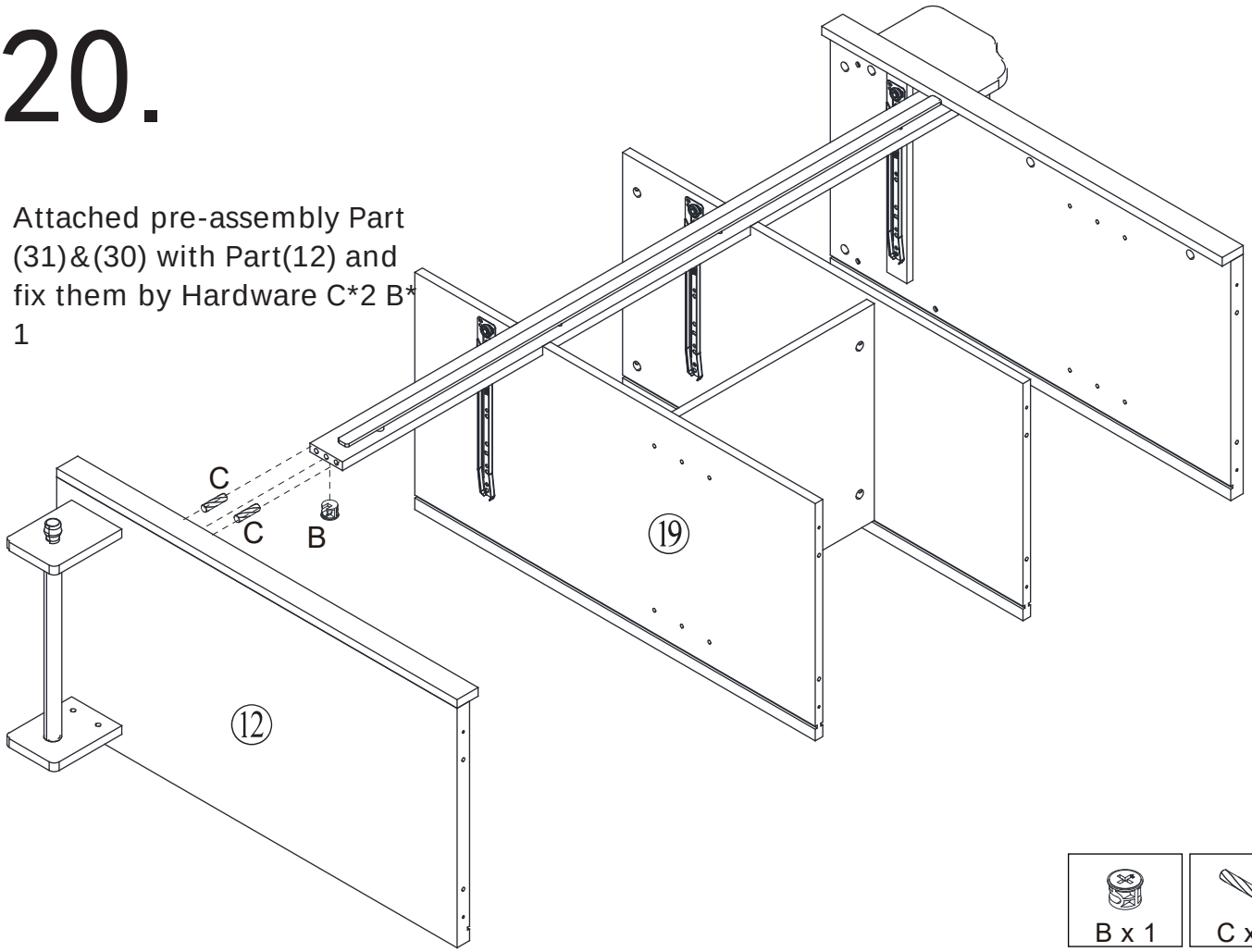

21.

Attached pre-assembly Part (31)
with Part(12)&(19)&(20)&(21) and
fix them by Hardware D*8 C*8.

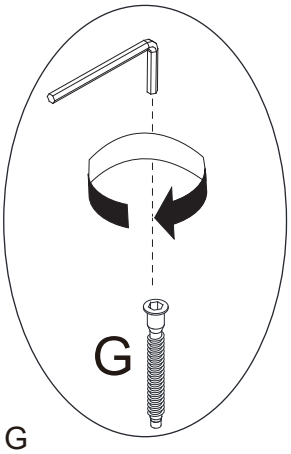

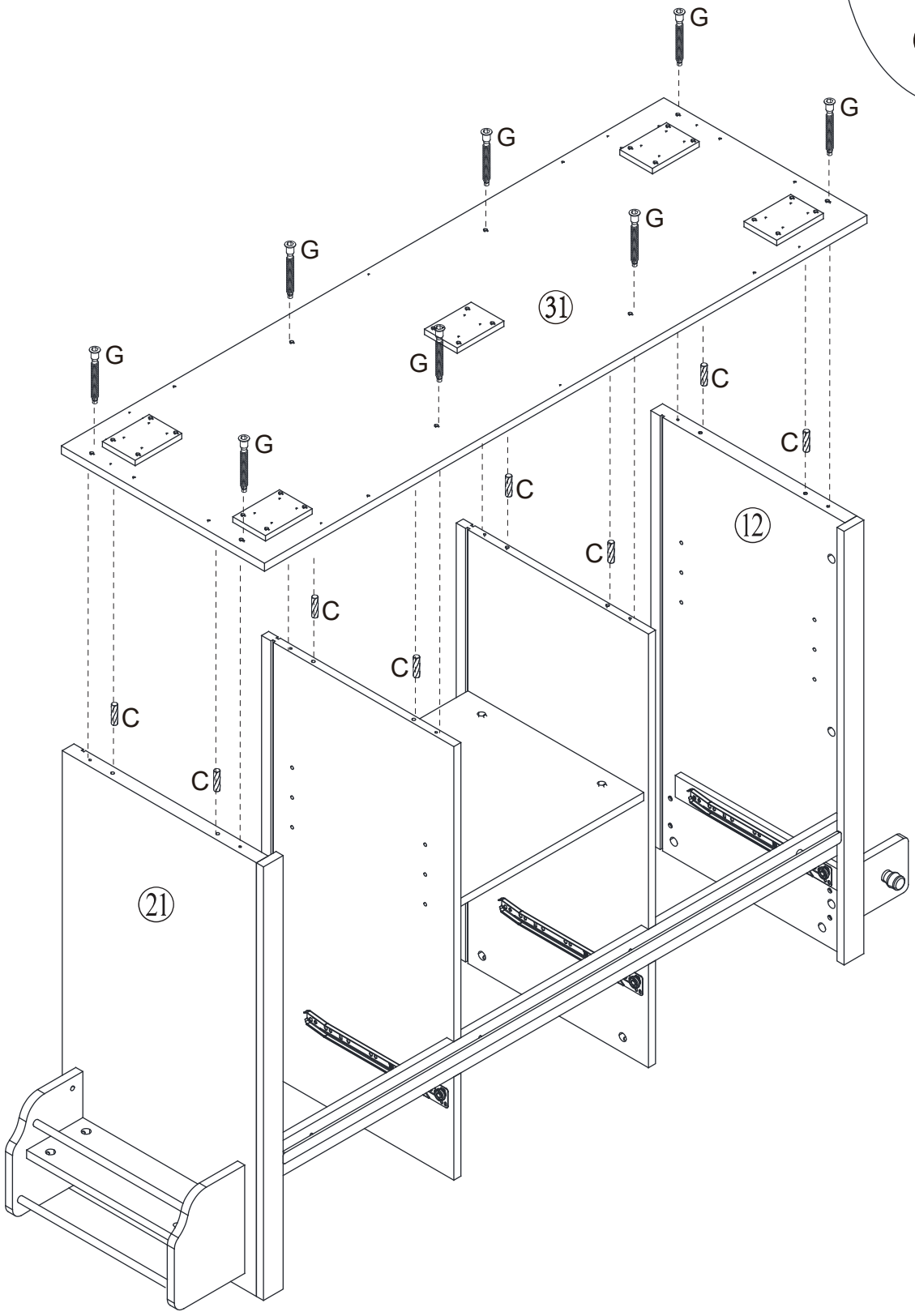

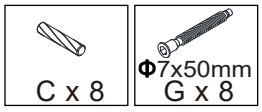

22.

Attached Hardware A*4 with Part(28)*2.

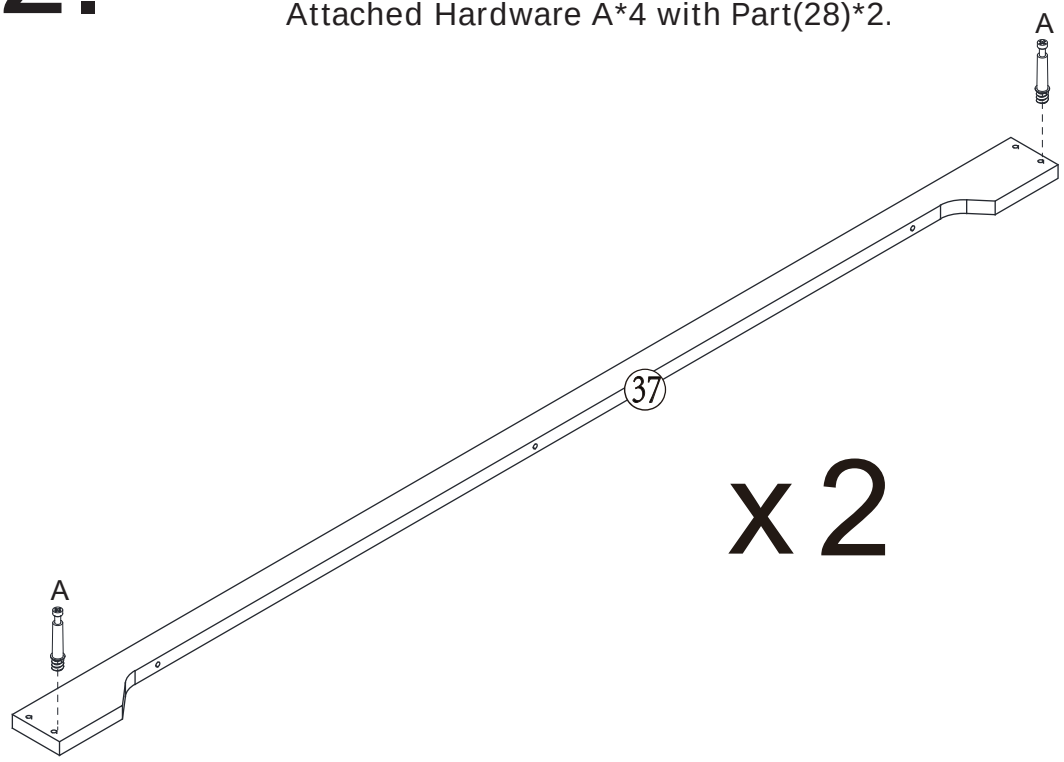

x2

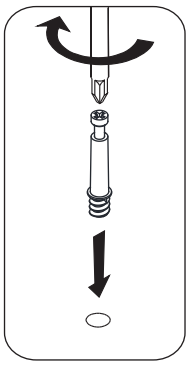

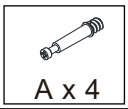

23.

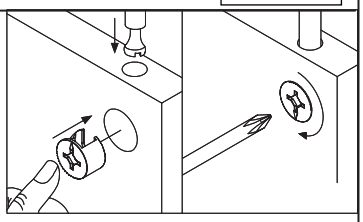

Attached Part （36)*2 with Part(37)*2 and fix them by B* 4 and C*4.

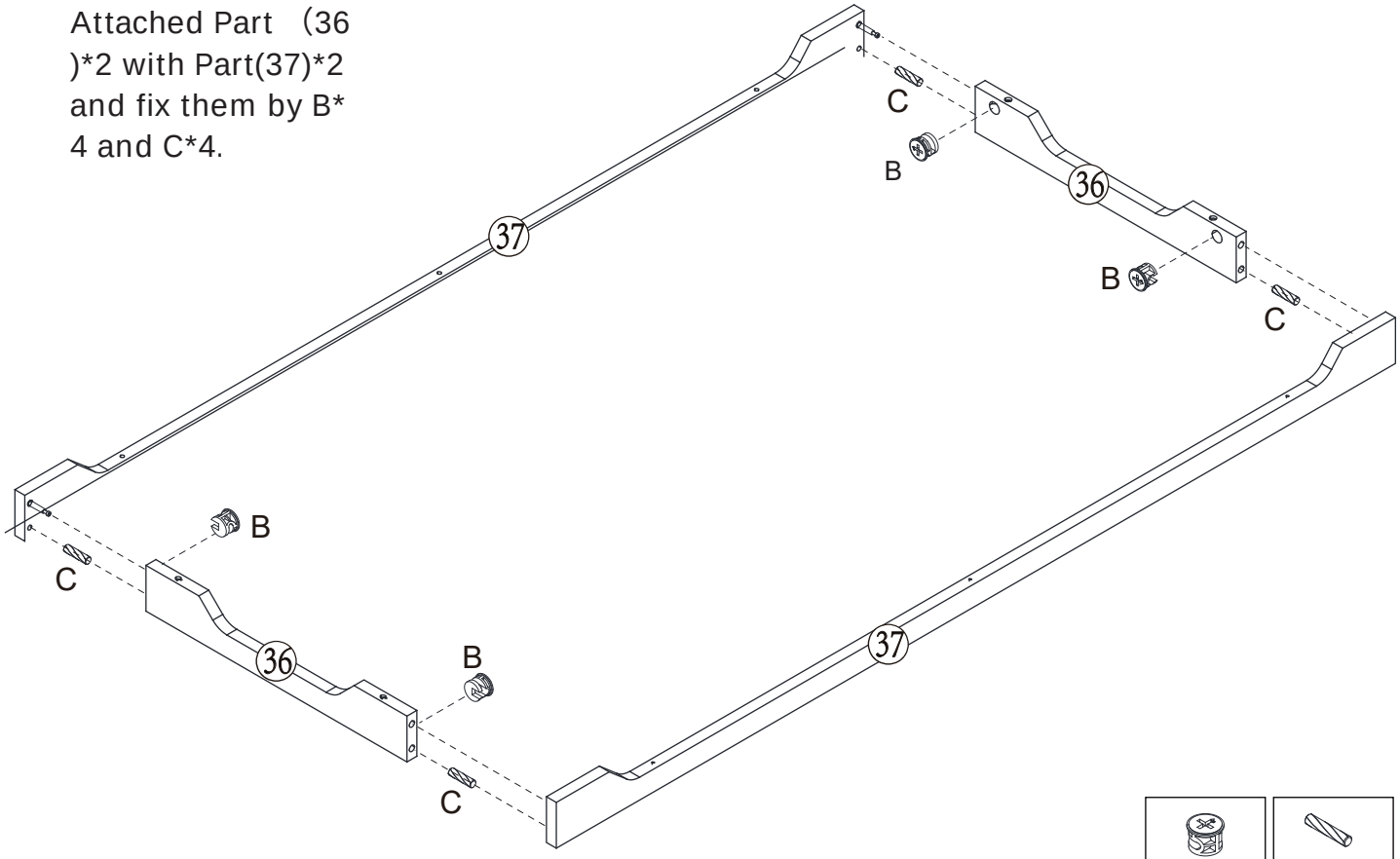

24.

Attached Part (31) with pre-assembly Part (37)
(36) and fix them by Hardware C*8 L*10.

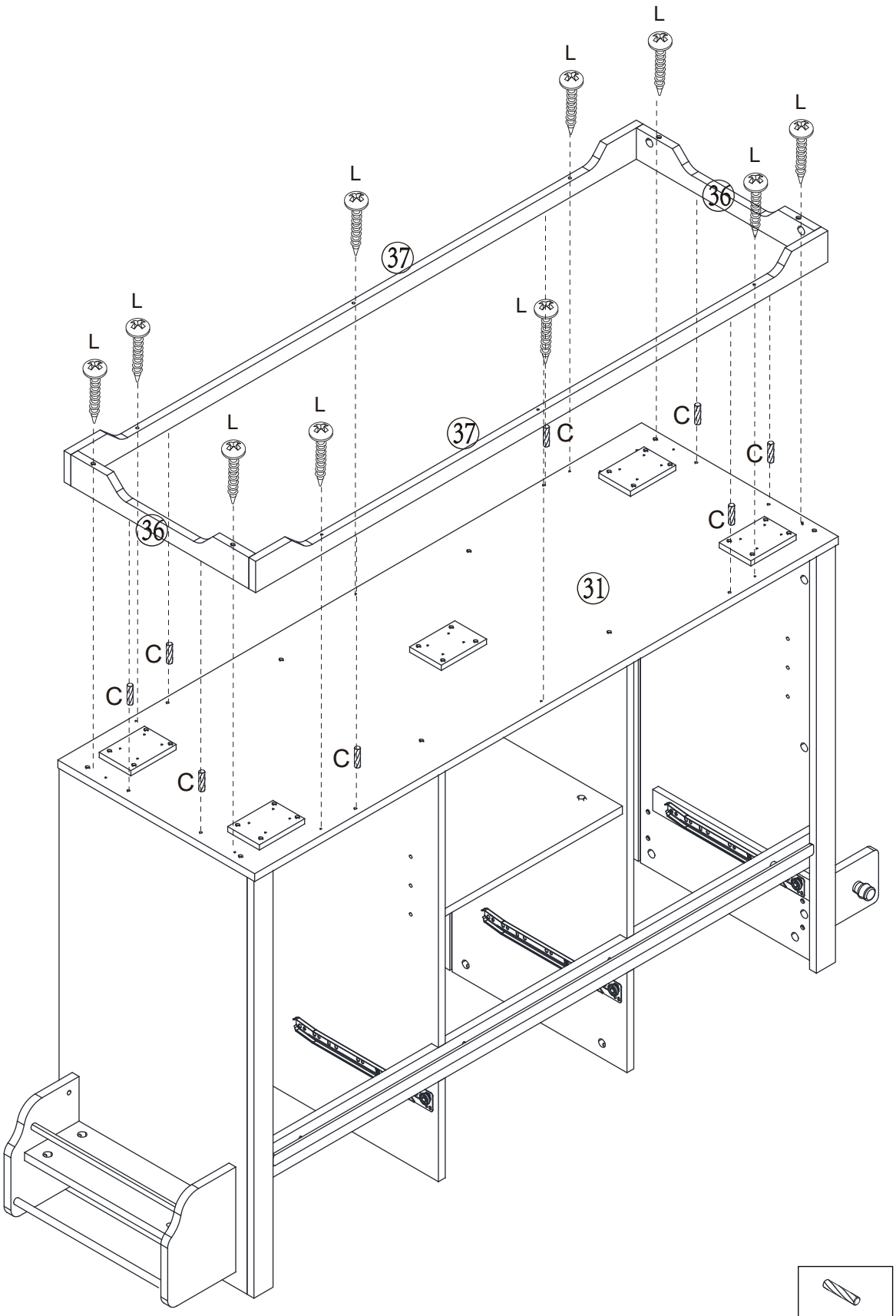

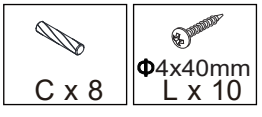

25.

Attached Hardware V*3 & W*2 with Part(31) and fix them by U*20.

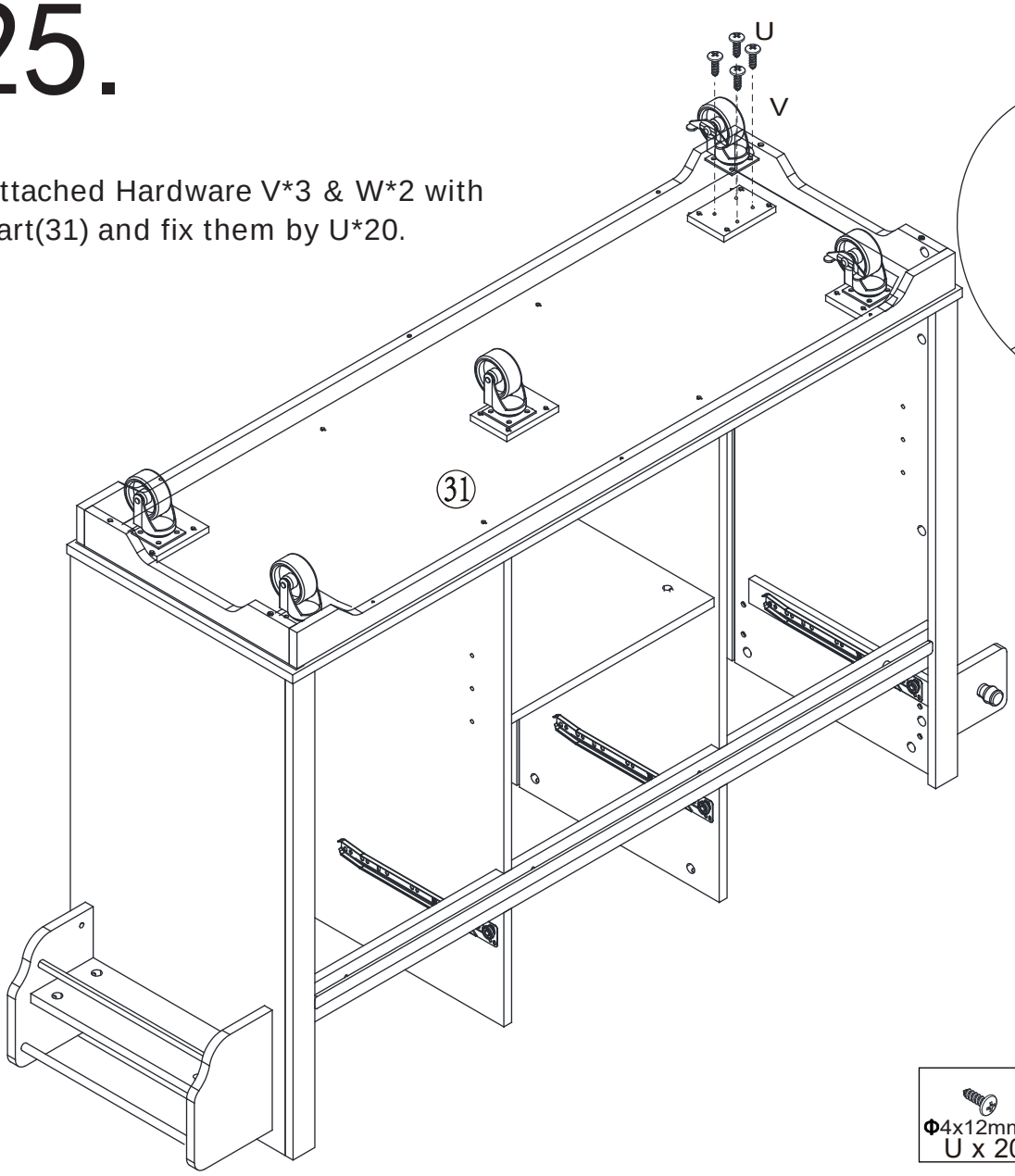

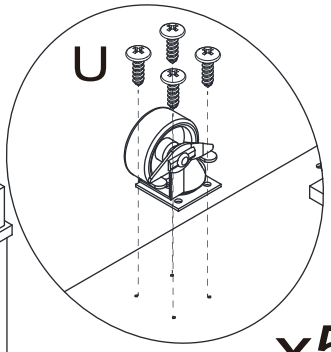

x5

Φ4x12mm U x 20	V x 3	W x 2

26.

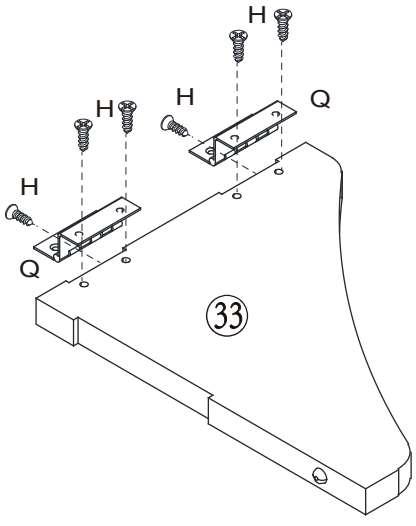

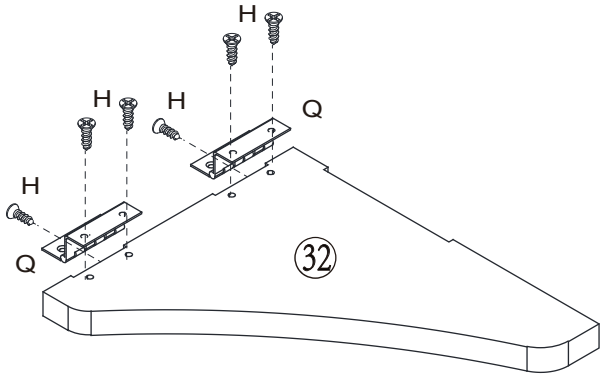

Φ3x12mm H x 12	Q x 4

Attached Hardware Q*4 with Part(33) &Part (32) and fix them by H*12.

27.

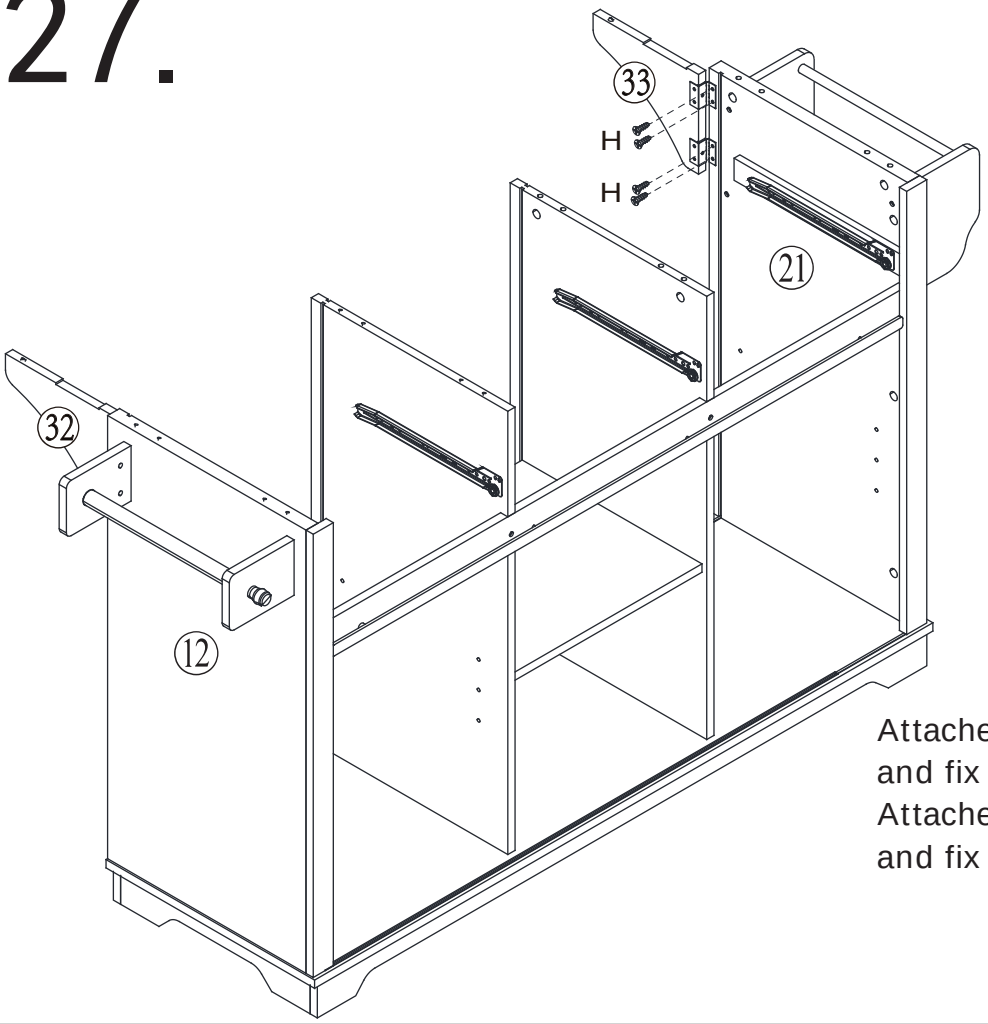

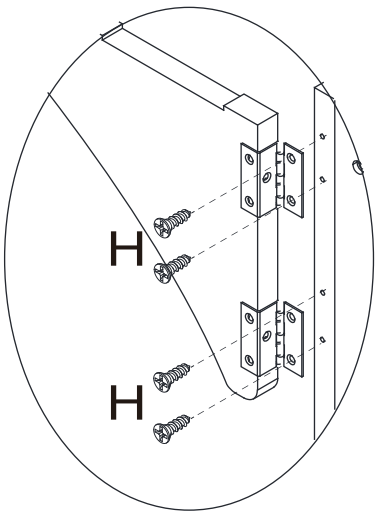

x2

Attached Part(33) with Part(21)
and fix them by H*4.
Attached Part(32) with Part(12)
and fix them by H*4



28.

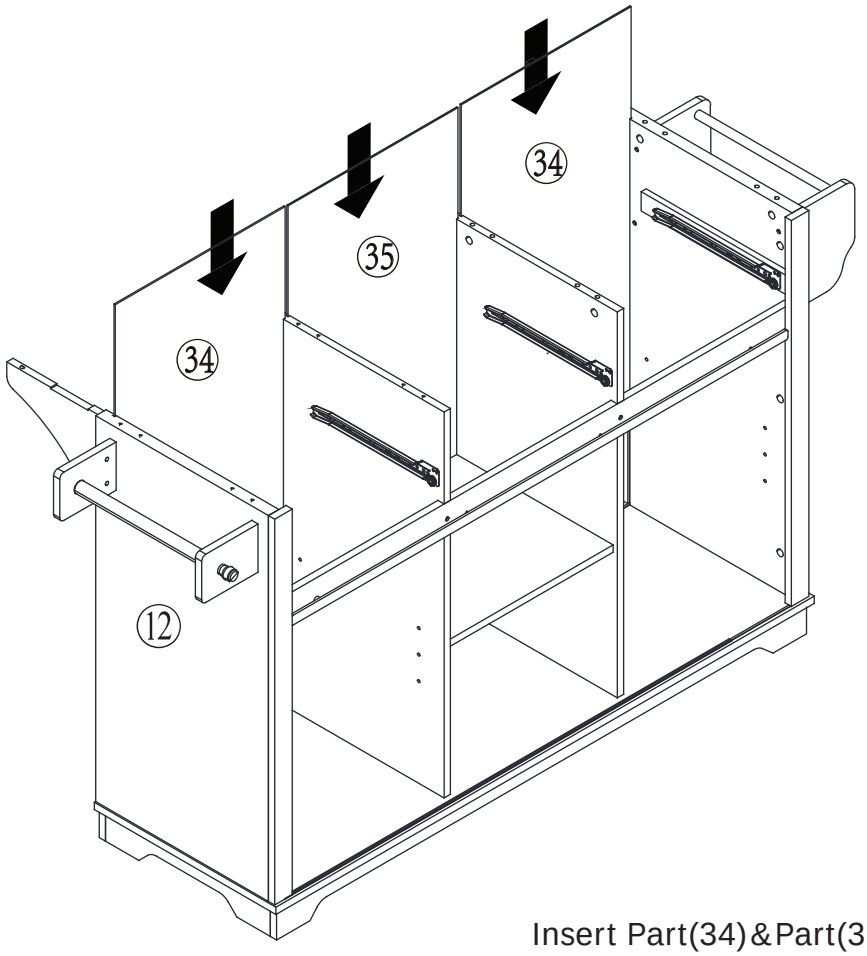

Insert Part(34)&Part(35)&Part(34)

29.

Attached Hardware
A*8 with Part (10)

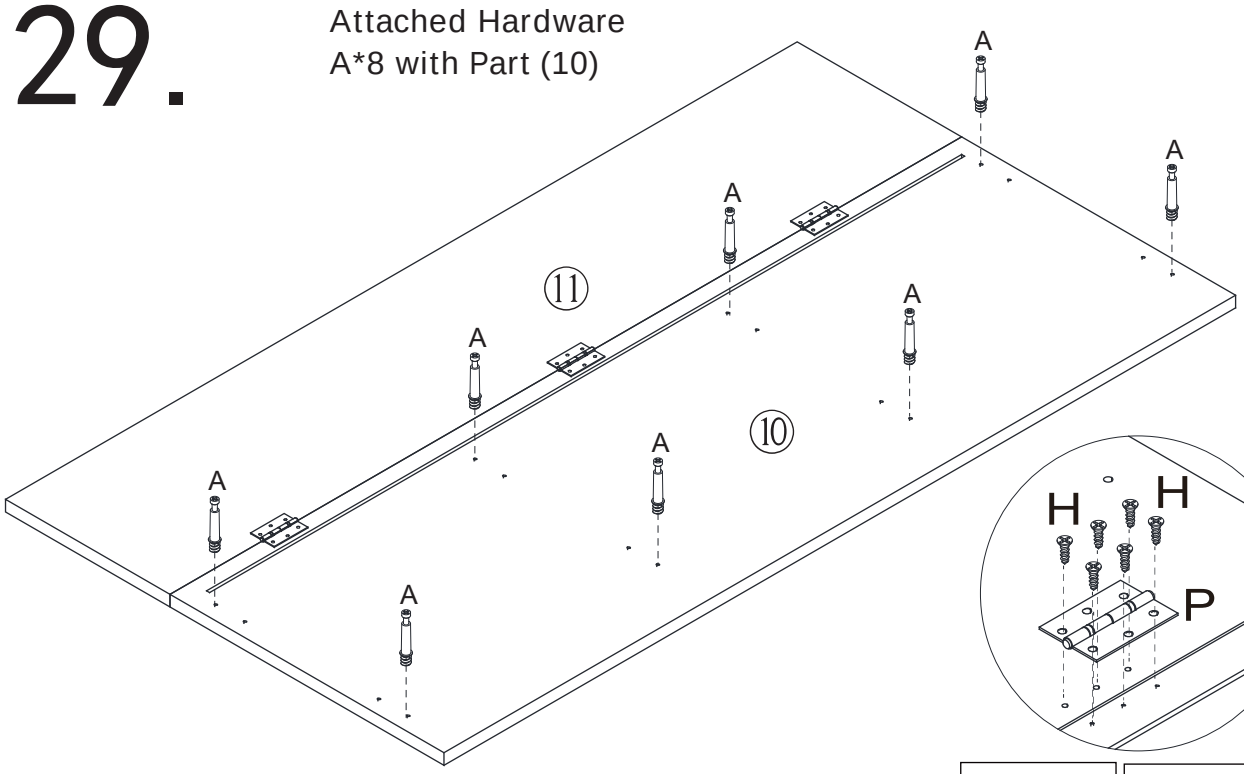

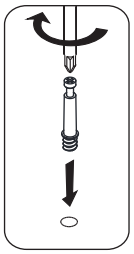

x3

Attached Part (11) with Part(10) and
fix them by Hardware P*3 H*18.

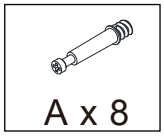
A x 8

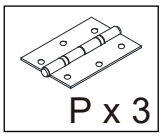
P x 3

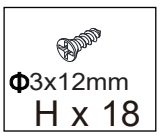

H x 18

30.

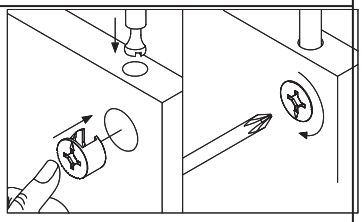

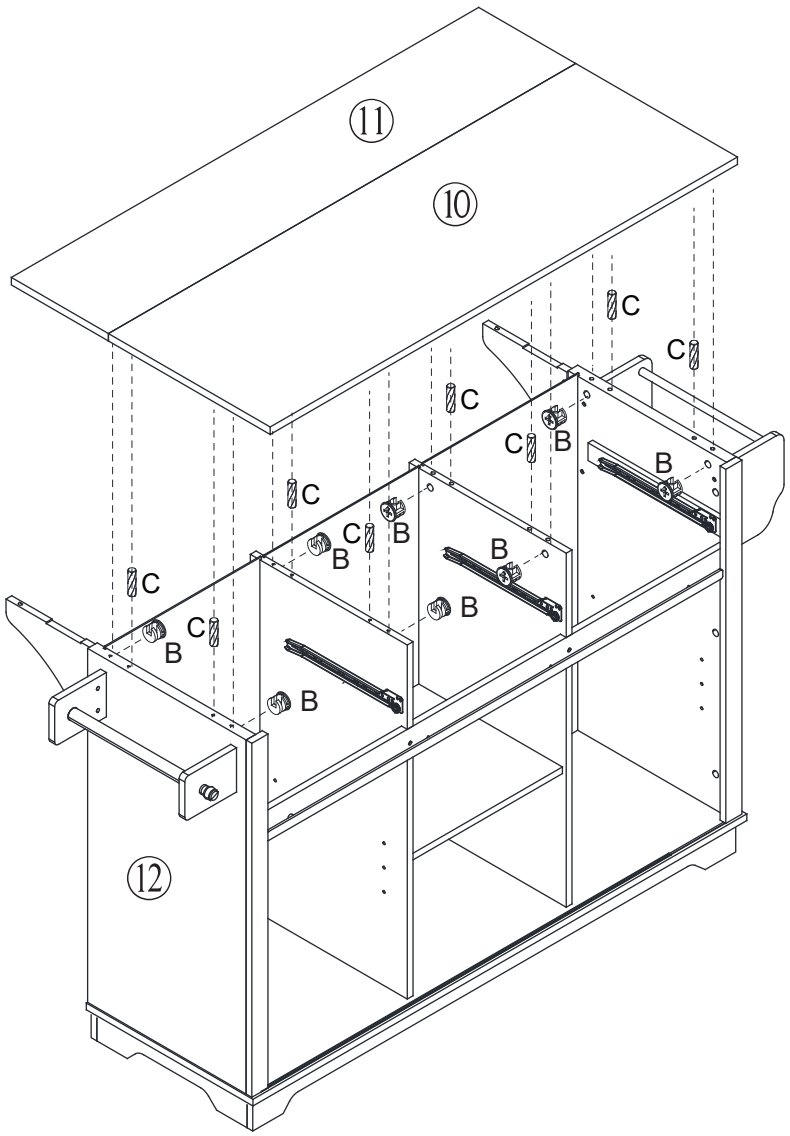

Attached pre-assembly Part (11)&(10) with pre-assembly Part (12)(19) (20)(21) and fix them by Hardware C*8 B*8


B x 8

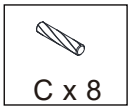
C x 8

31.

Drop four drawers (5)(6)(7)

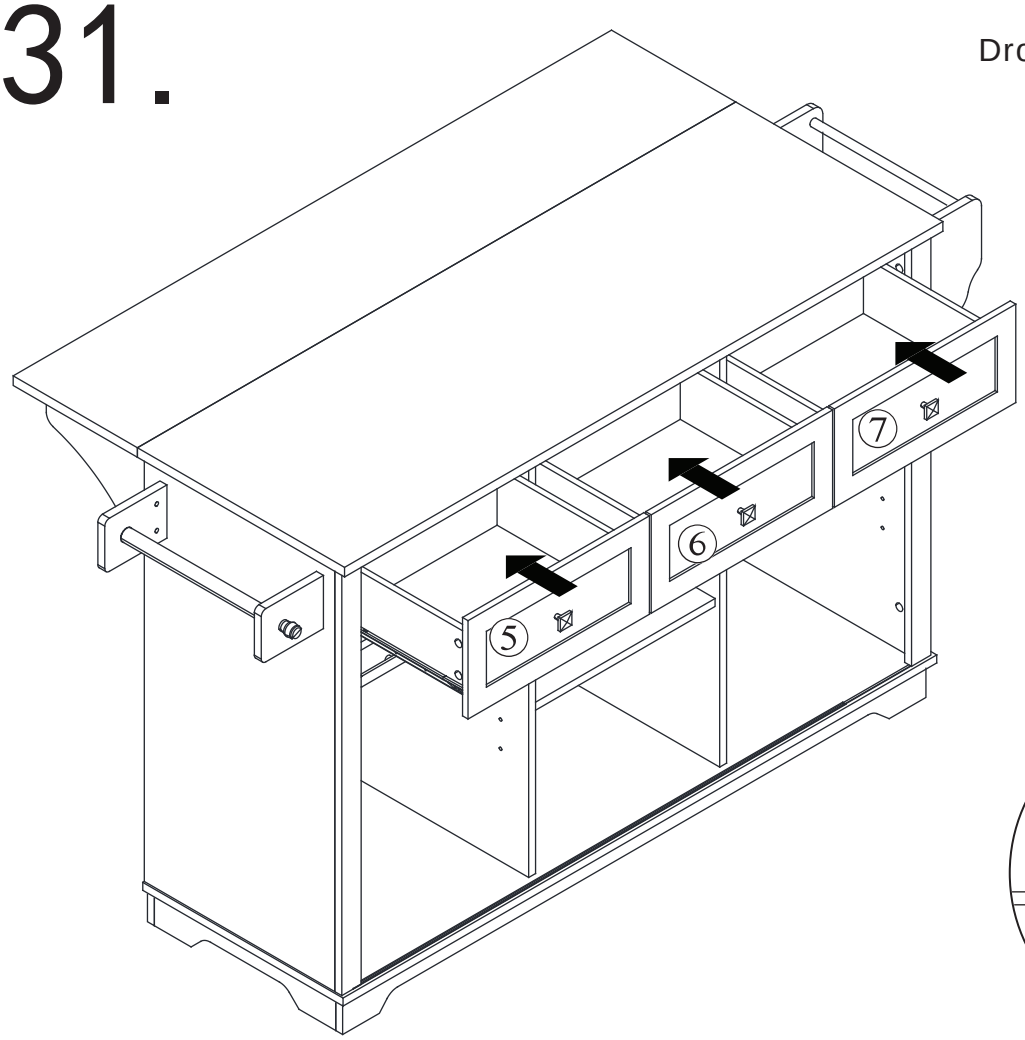

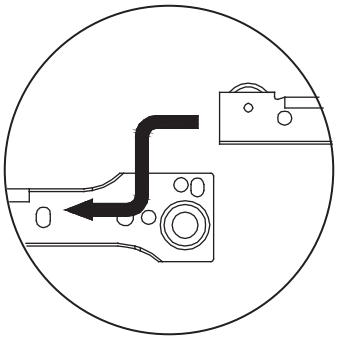

32.

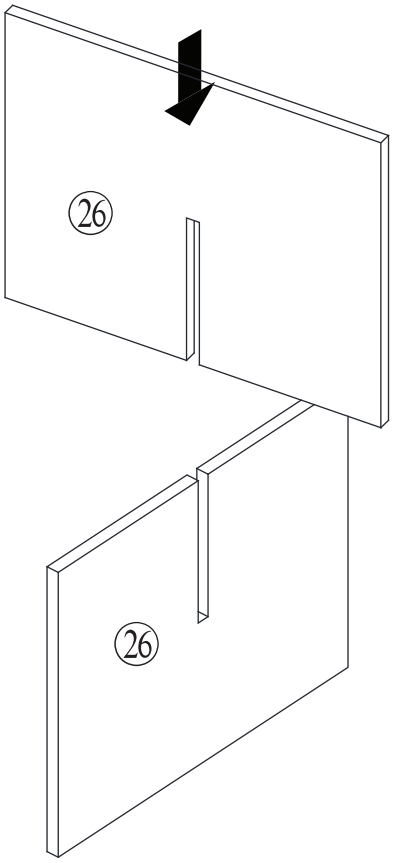

Slot two Part(26) top-down

33.

Insert hardware T*8,
then Place Part(22) &Part(26)

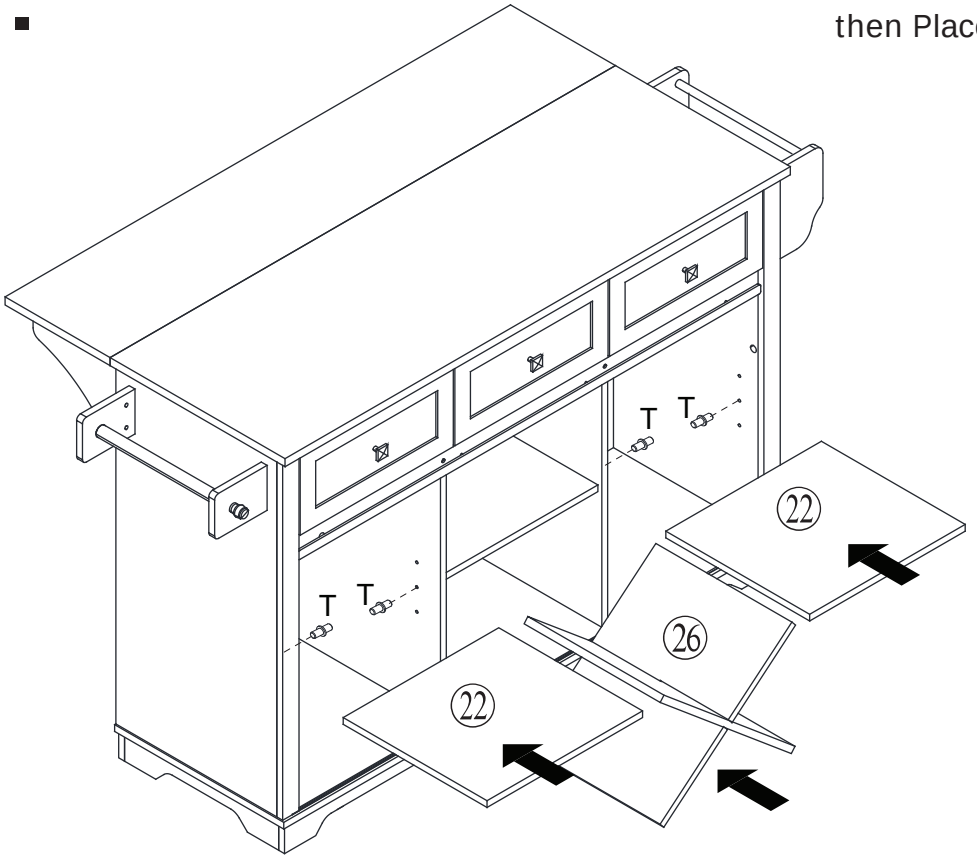

T x 8

34.

Attached Handle J
with Part（39)(38)
and fix it by
Hardware U*4

Flip this Pannel 180°
Attached Handle N with
Part（39)(38） and fix it by
Hardware H*4
Attached Handle F and fix
it by Hardware F*2.

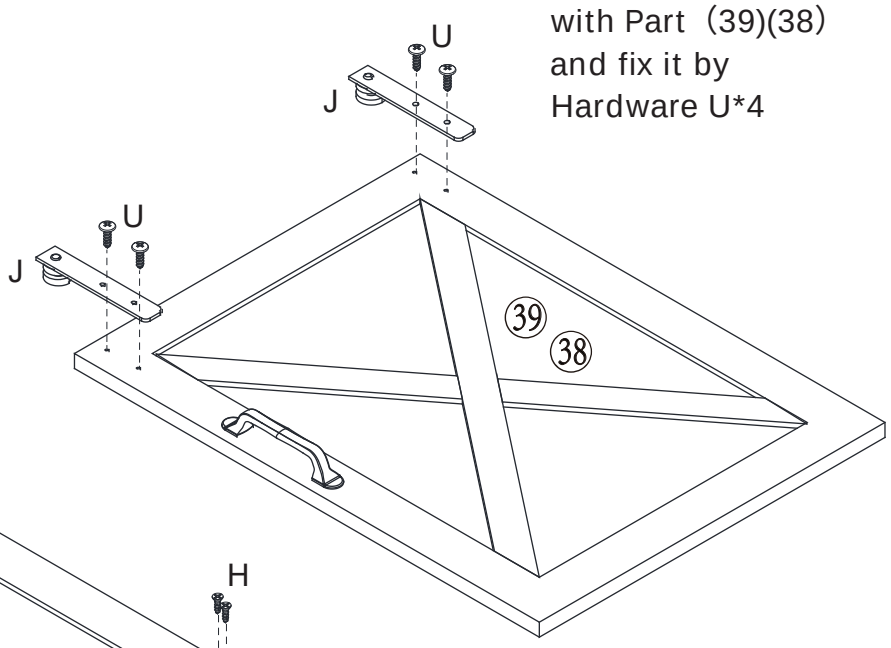

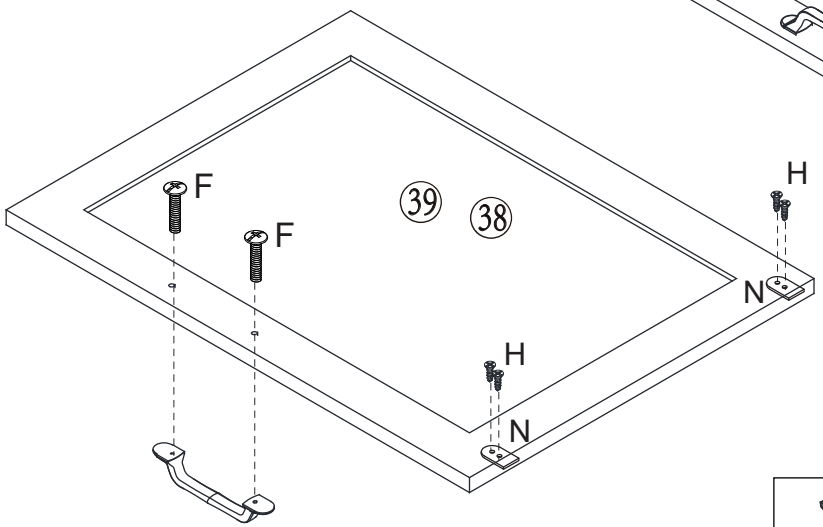

180

x2

Φ4x12mm
U x 8

J x 4

Φ3x12mm
H x 8

N x 4

Φ4x18mm
F x 2

35.

Place Part(38)&Part（39） onto the sliding track assembly.

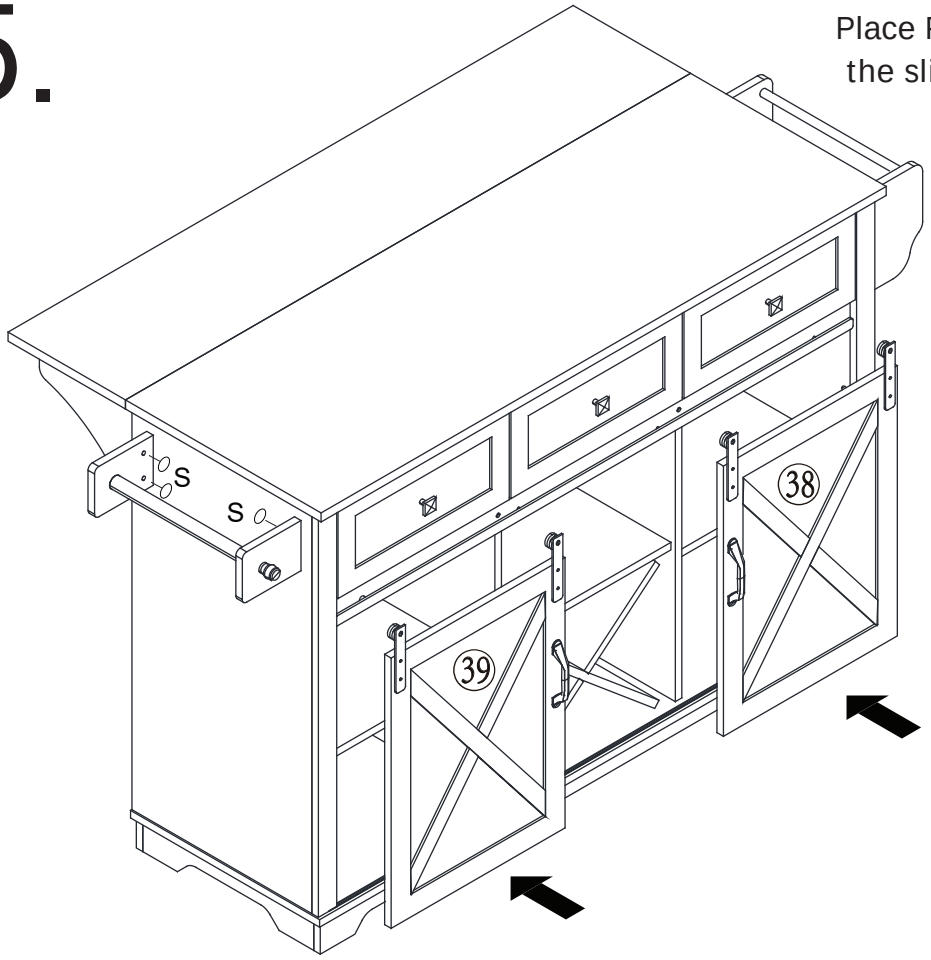

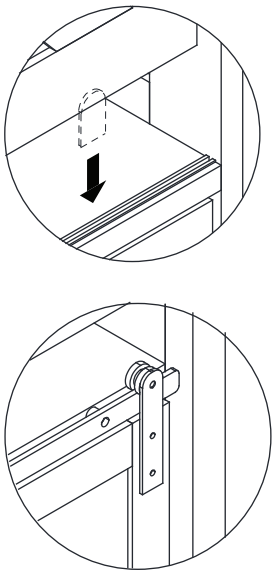

S x 4

36.

Fix Hardware O*12 by Hardware M*12.

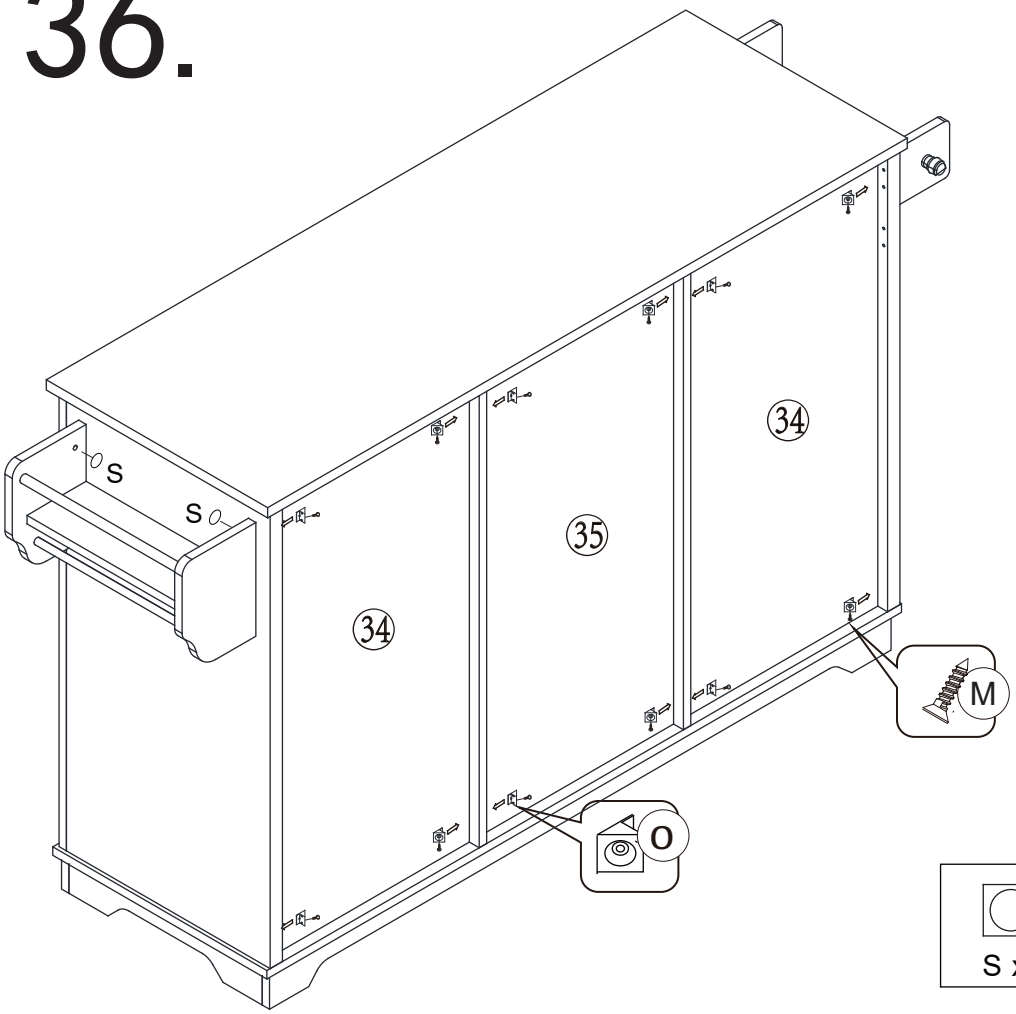

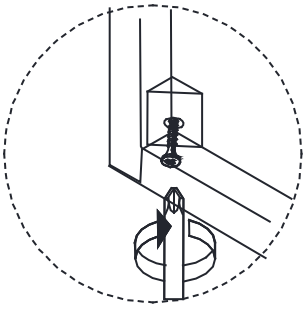

S x 4

Φ3x14mm M x 12

O x 12

37.

