Installation & Assembly



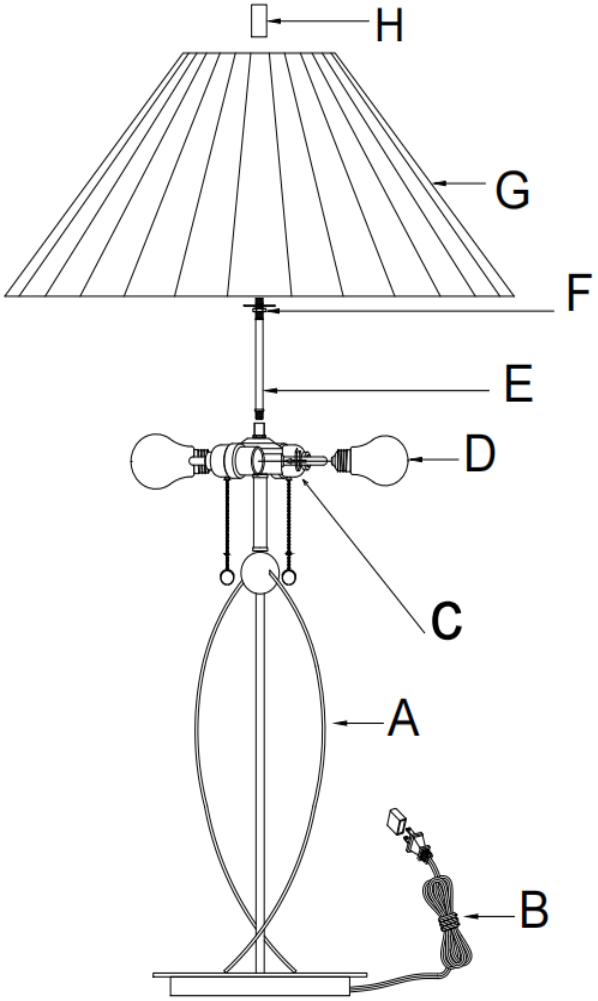

ASSEMBLY INSTRUCTION:

1. Place the base(A) on asmooth flat surface.
2. Screw the thread rod(E) into the socket (C).
3. Adjust square washer(F) onto the tread rod(E); this can be used to raise the shade a little, if necessary.
4. Place the shade(G) over the tread rod(E), and tighten Finial(H) securing the shade in place.
5. Insert two included LED bulbs (D)
into the socket.
6. Insert plug (B) to an outlet.
7. Turn lamp on by pulling one or both chains.

This fixture has been rated up to two (2) 60-watt maximum Type A standard incandescent (9-watt LED equivalent). This lamp is for INDOOR USE ONLY.
TWO LED BULBS INCLUDED

	E26	9W	ETL LISTED

IMPORTANT SAFETY INSTRUCTIONS

THIS PORTABLE LAMP HAS A POLARIZED PLUG (ONE BLADE IS WIDER THAN THE OTHER)AS AFEATURE TO REDUCE THE RISK OF ELECTRIC SHOCK. THIS PLUG WILL FIT IN A POLARIZED OUTLET ONLY ONE WAY.IF IT DOES NOT FIT FULLY IN THE OUTLET, REVERSE THE PLUG.IF IT STILL DOESNOT FIT, CONTACT A QUALIFIED ELECTRICIAN. NEVER USE WITH AN EXTENSION CORD UNLESS THE PLUG CAN BE FULLY INSERTED.

TO CLEAN:PLEASE USE A NON-ABRASIVE DRY CLOTH LIKE MICRO-FIBER IN CLEANING.USE MILD DISH SOAP ON DAMP NON-ABRASIVE CLOTH IF THE LAMP IS DUSTIER.DO NOT USE HOUSEHOLD CLEANERS.

This Lamp is UL listed.