Assembly Instructions

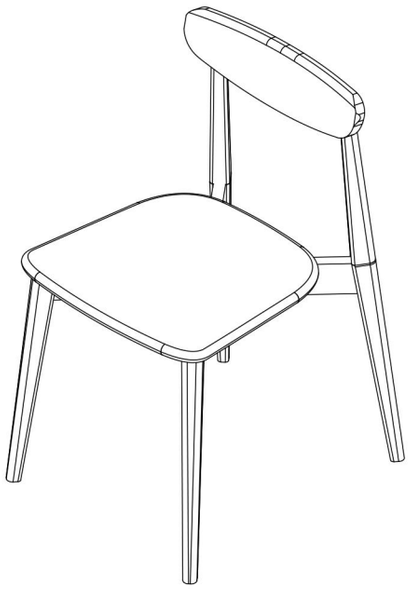

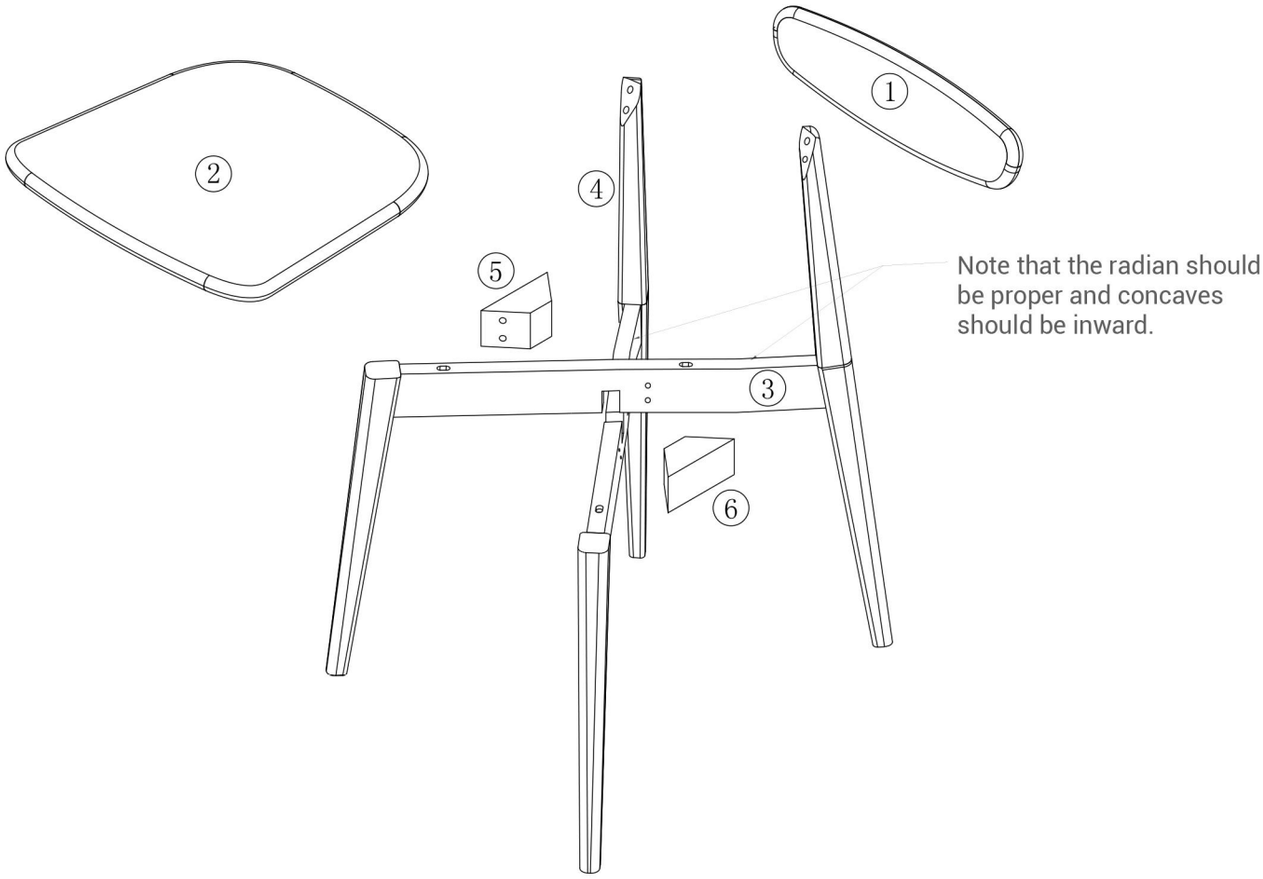

Step 1: Align the gap to install the two leg frames, and install the backrest and timber connections in order. After that, ensure that all screws are not locked. Note: 1. The radian between the two leg frames should be proper. 2. The concaves of the two leg frames should be inward. 3. The gap should be aligned to install the two leg frames.

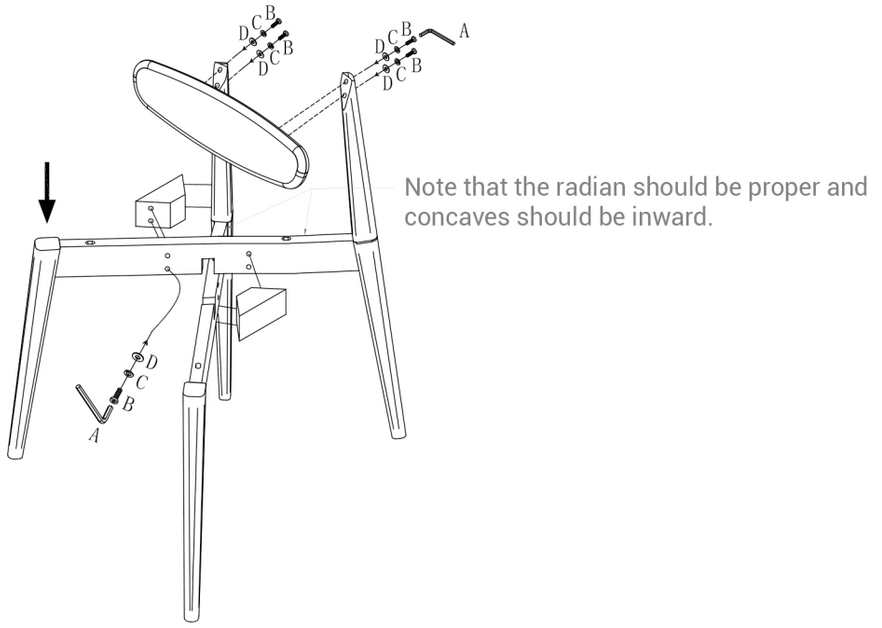

						
A. Allen key (4#) x 1	B. Screws (M6x30) x 12	C. Split washers (ø6) x 12	D. Flat washers (ø6) x 12			

Step 2: Align holes in the chair plate to fasten all screws, adjust and keep the chair horizontal, and lock all the screws.
Note: If a completely installed chair has any short leg, you can put a flannelette washer (F) under the leg to keep the chair horizontal.

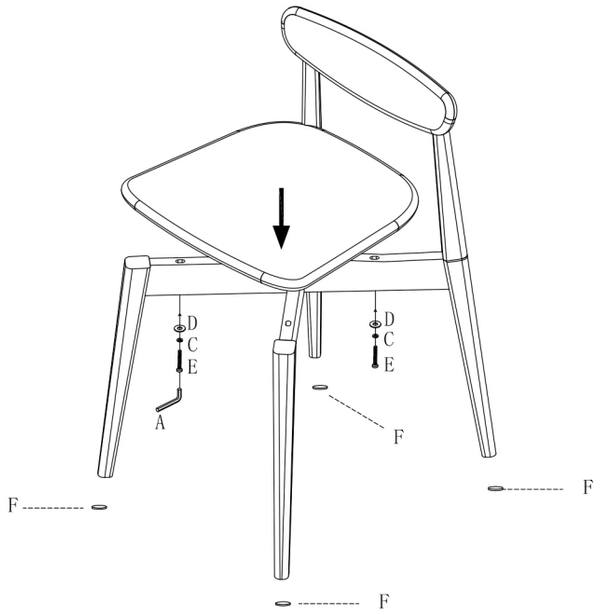

						
A. Allen key (4#) x 1		C. Split washers (ø6) x 4	D. Flat washers (ø6) x 4	E. Screws (M6x60) x 4	F. Flannelette washers (ø20) x 6	