Chest

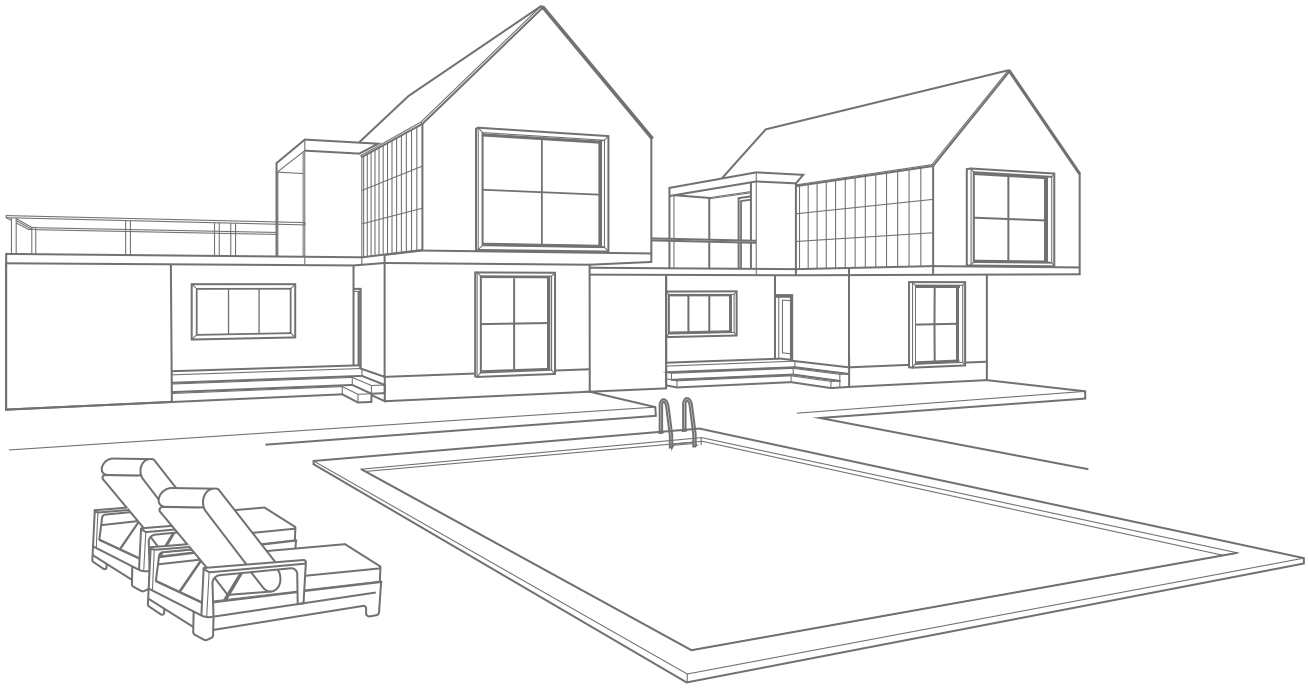

BOARD IDENTIFICATION

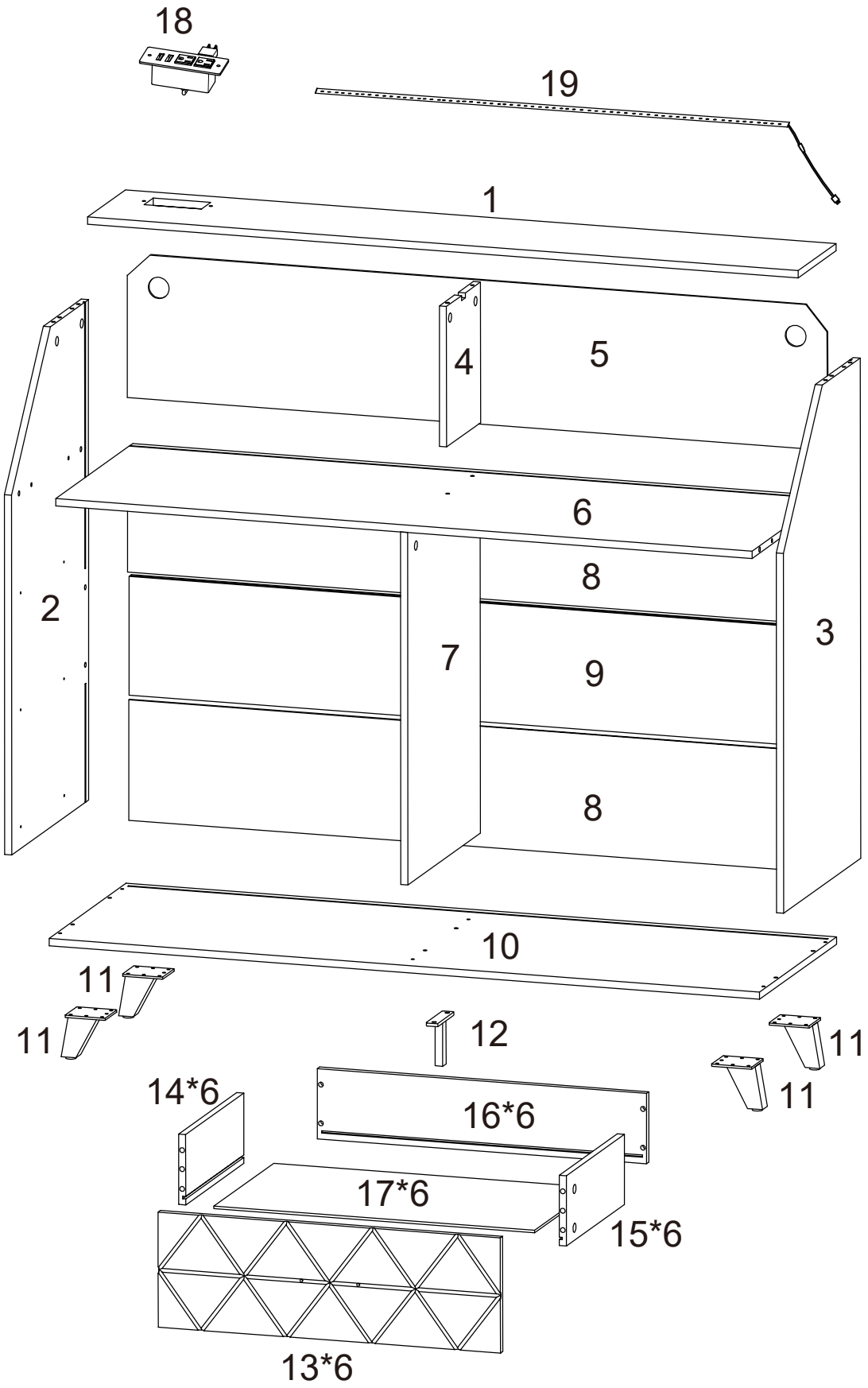

BOARD IDENTIFICATION

Installation of Eccentric Wheel Nut Set

1

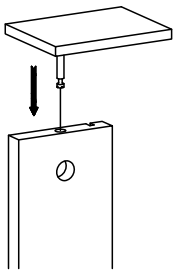

Screw the end of cambolt on the board,find the corresponding board and insert the other end.

2

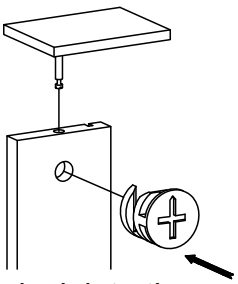

Stuff the camlock into the round hole.
The arrowpoints to the cambolt.

3

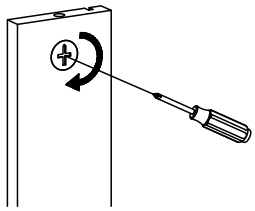

Turn clockwise about 180° to lock the plate.



M3.5X12	
A	X68

Screws



M4X35	
B	X28

Screws

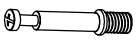

C	X40

Cam bolt



D	X40

Cam lock



Φ6	
E	X28

Wood dowl

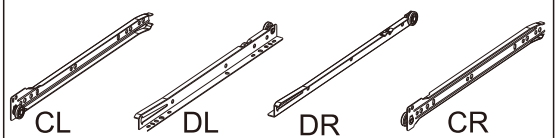

F	X6

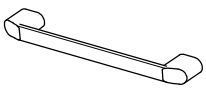

G	X6



H	X2



M6.3X40	
I	X6

Screws

M4X15	
J	X12

Screws



M6X10	
K	X2

Screws



M6	
L	X1

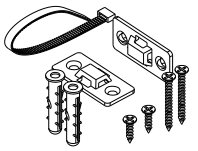

M	X2

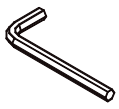

M4	
	X1

Wrench

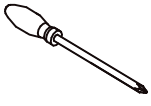

	×1

Screwdriver

INSTALLATION STEPS

STEP1:

CL:Install the screws from the second hole on the left and the second hole on the right.

CR:Install the screws from the second hole on the left and the second hole on the right.

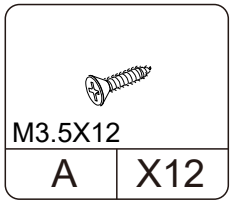

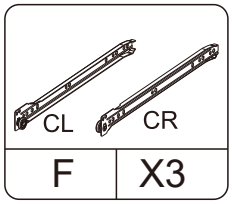

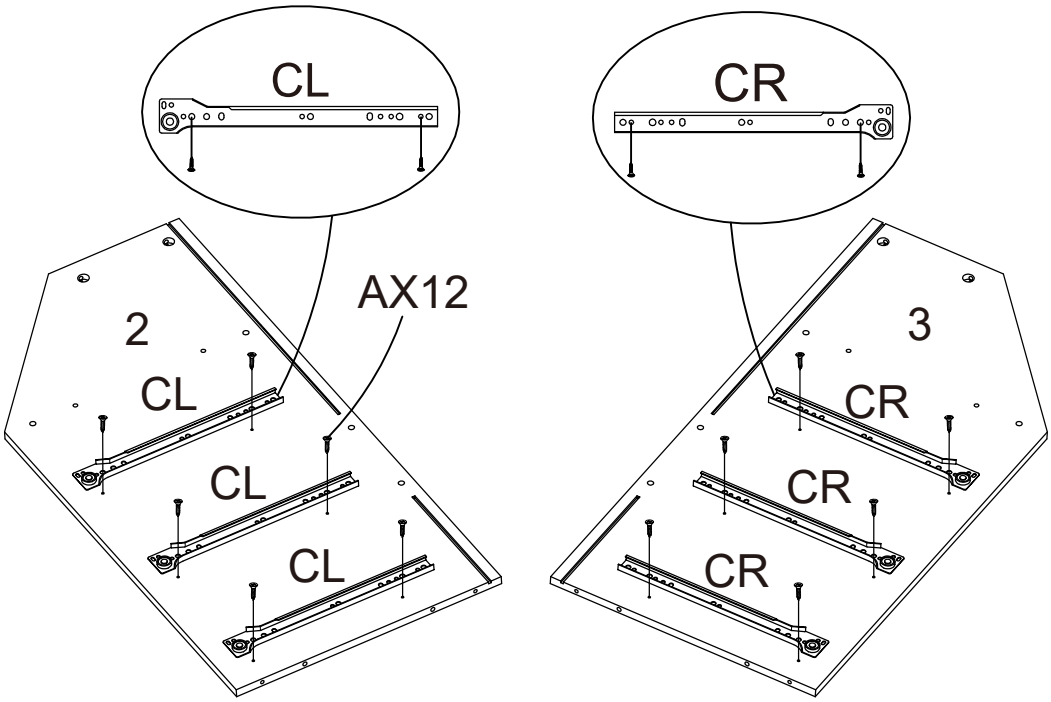

STEP2:

CR:Install the screws from the second hole on the left and the second hole on the right.

CL:Install the screws from the first hole on the left and the third hole on the right.

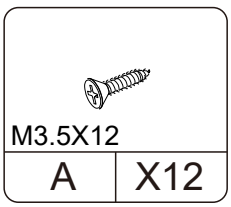

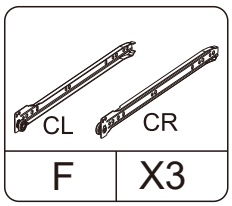

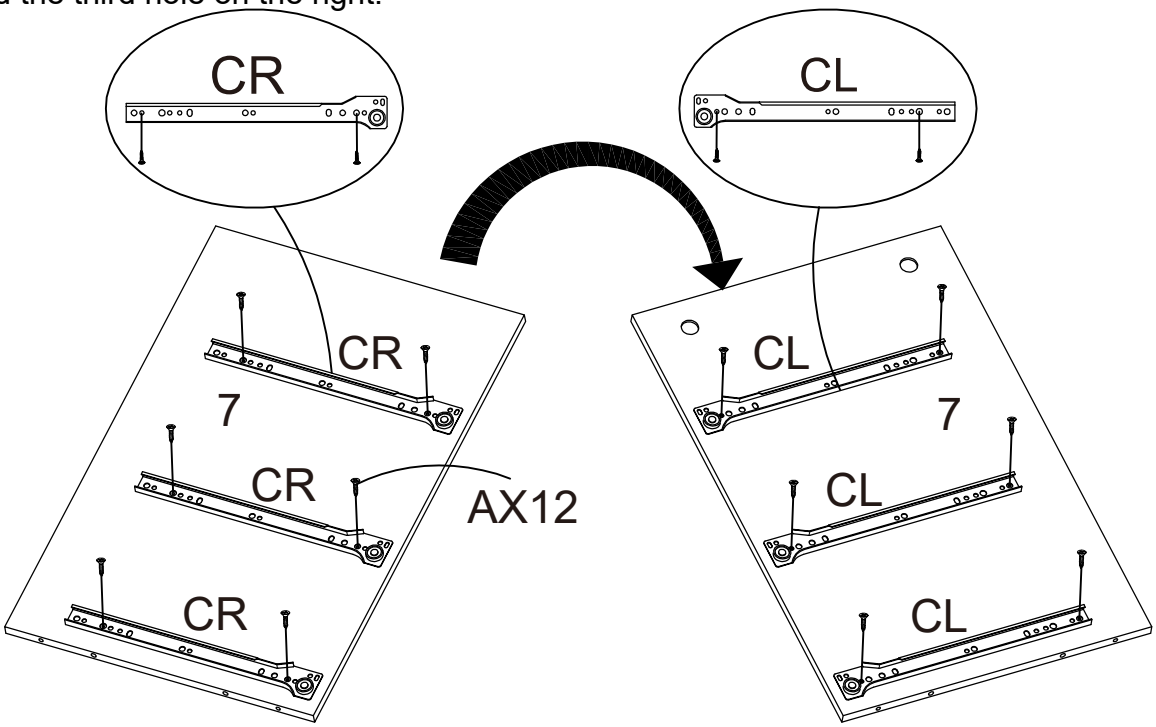

INSTALLATION STEPS

STEP3:

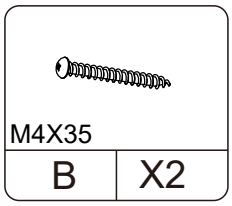

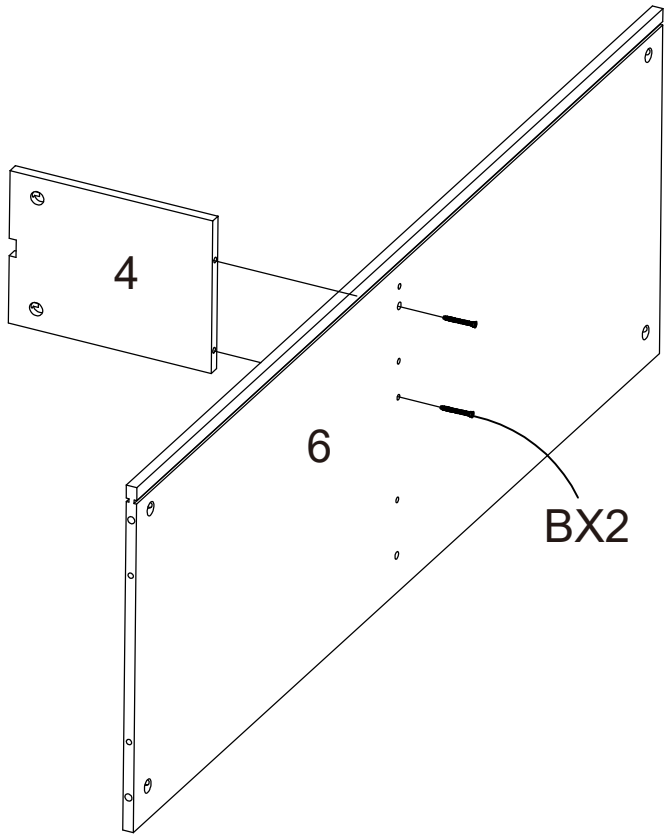

STEP4:

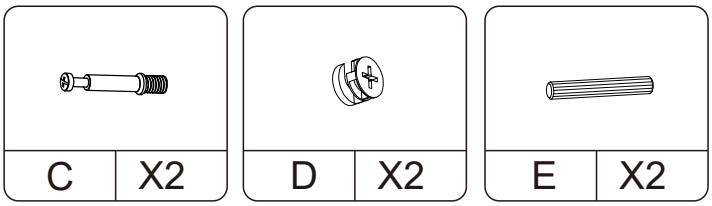

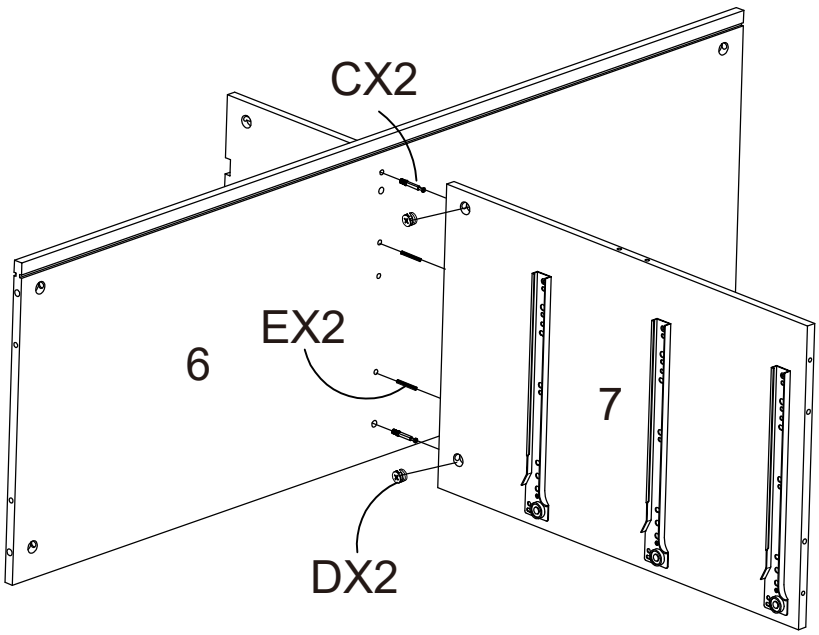

INSTALLATION STEPS

STEP5:

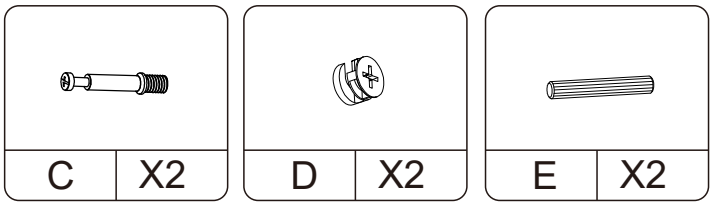

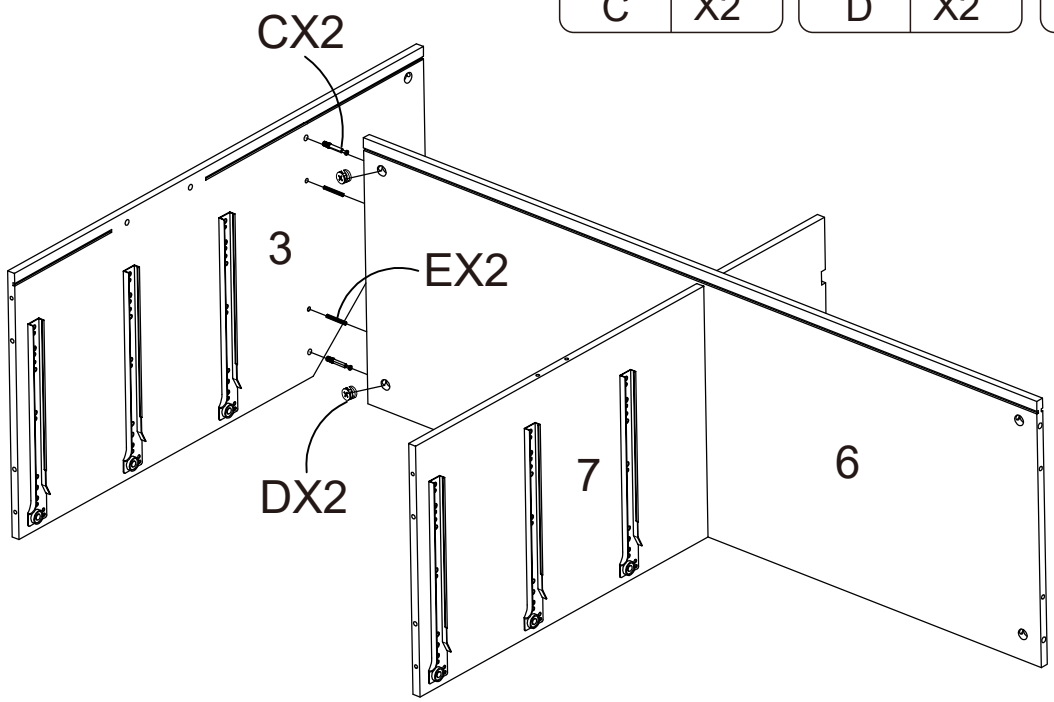

STEP6:

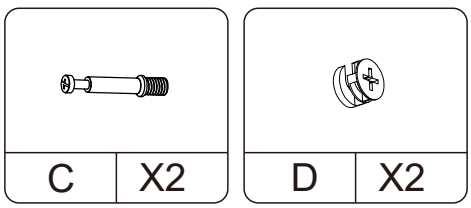

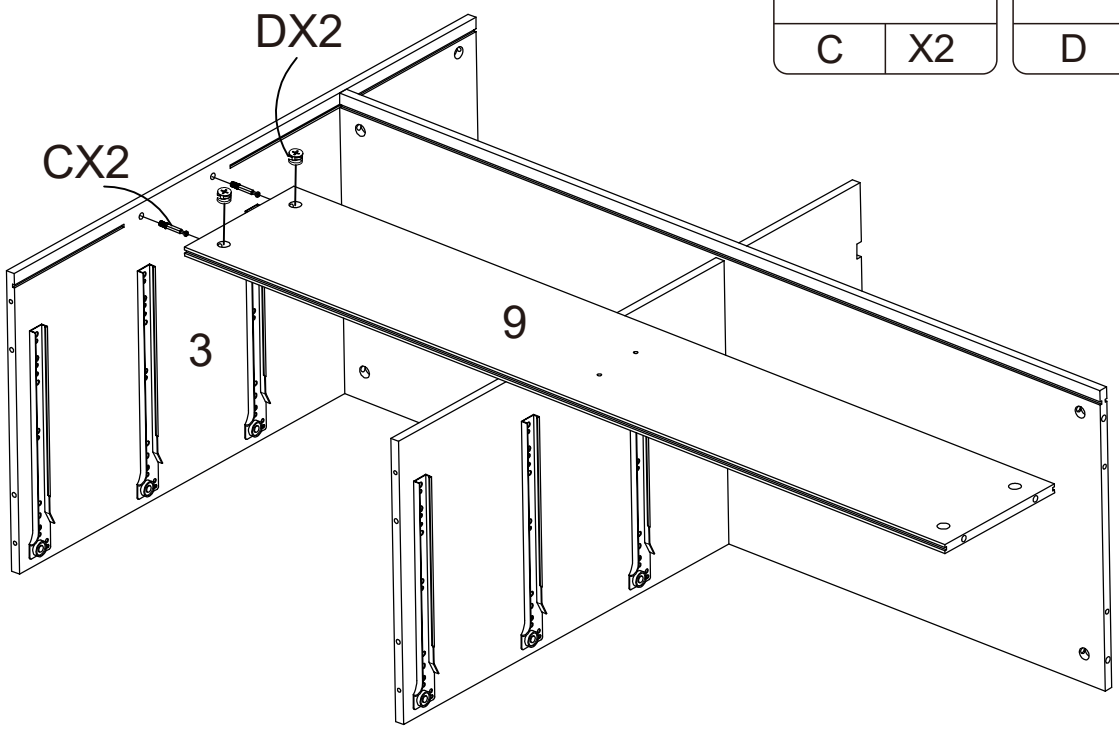

INSTALLATION STEPS

STEP7:

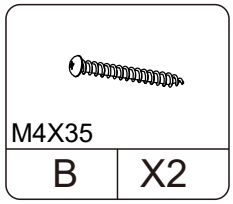

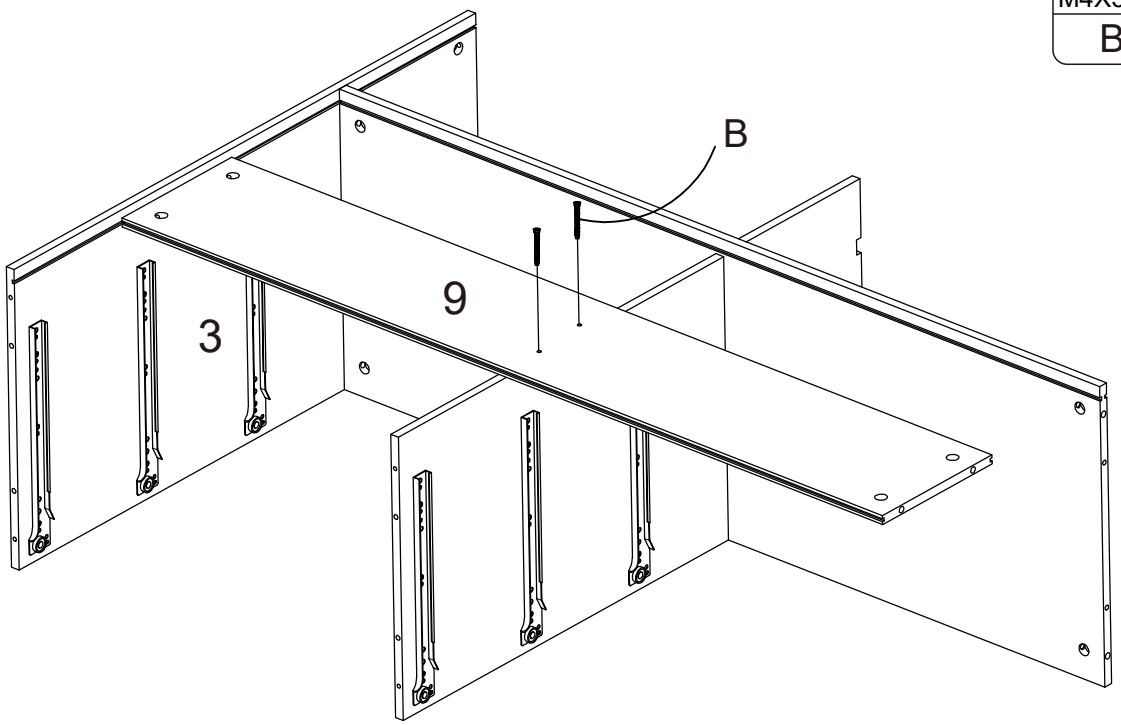

STEP8:

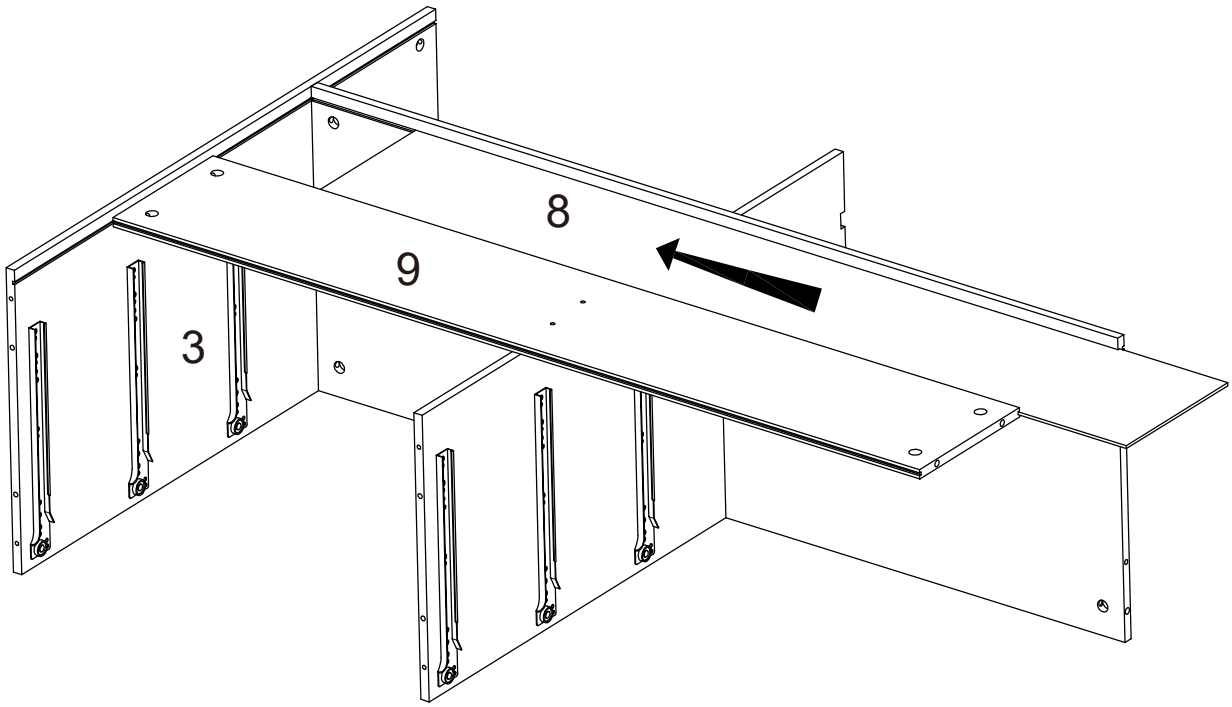

INSTALLATION STEPS

STEP9:

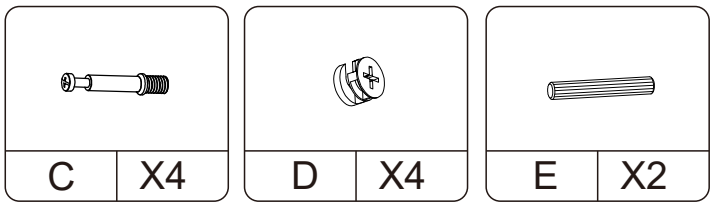

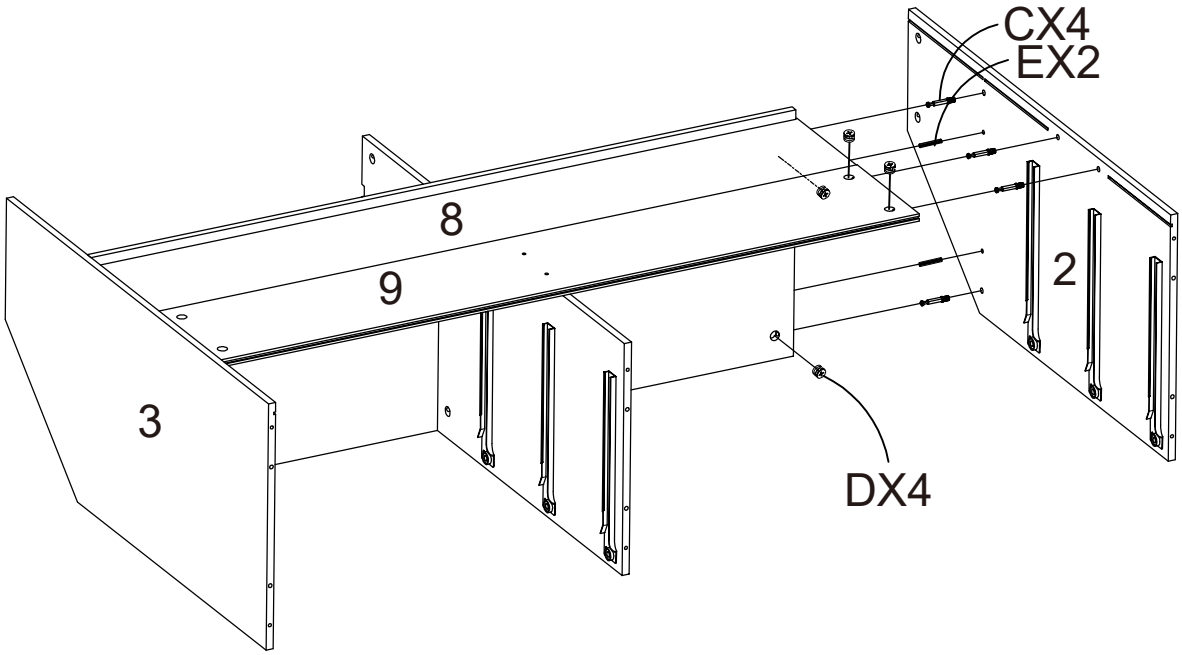

STEP10:

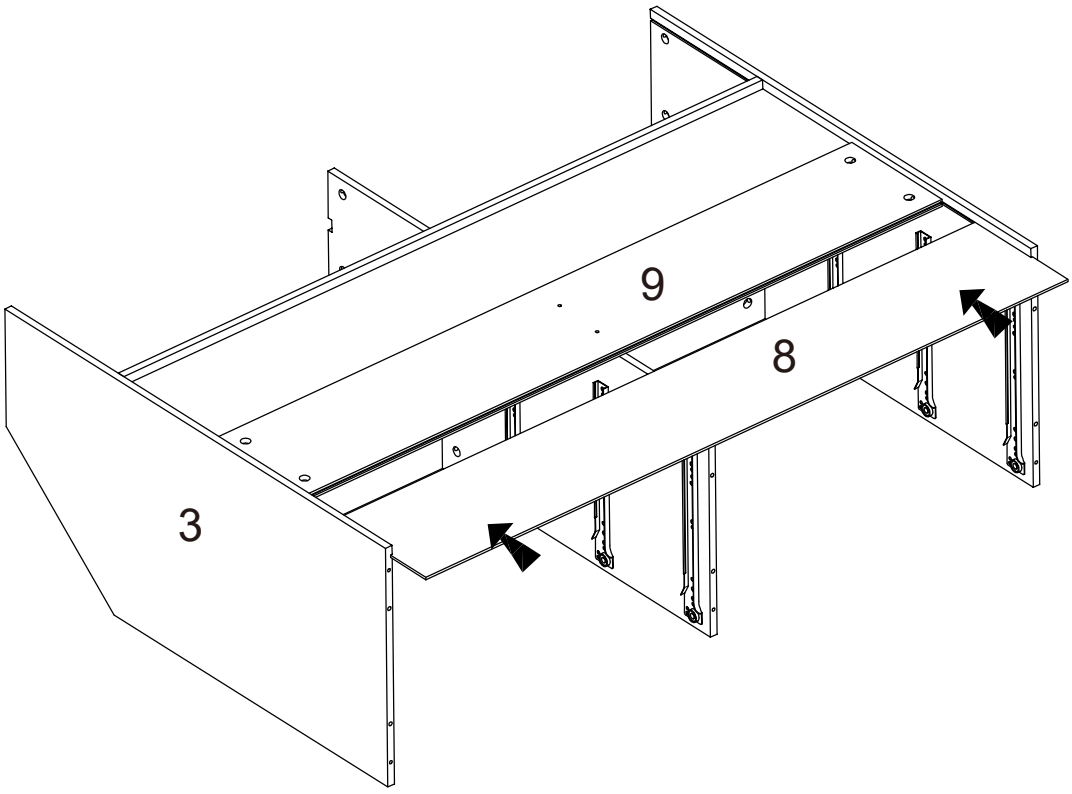

INSTALLATION STEPS

STEP11:

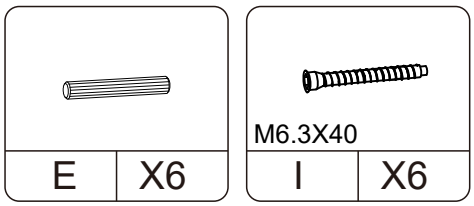

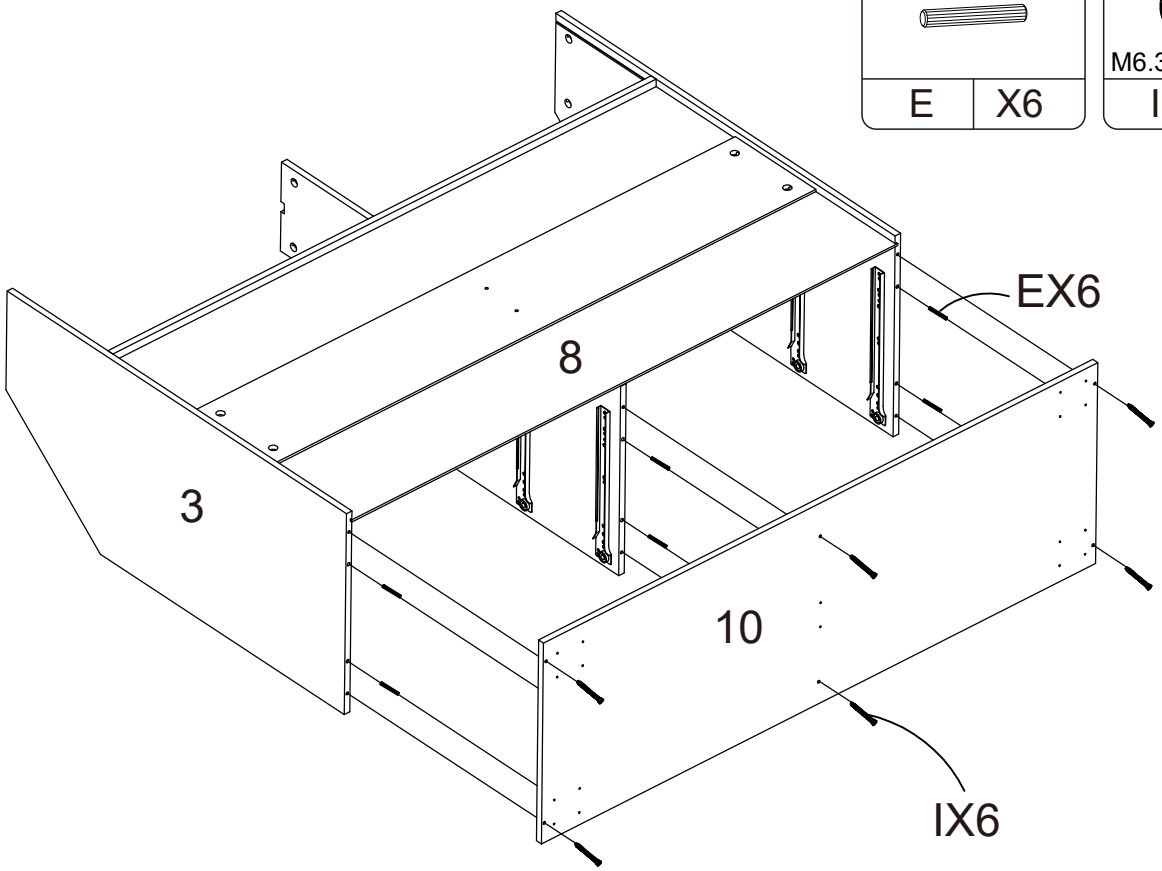

STEP12:

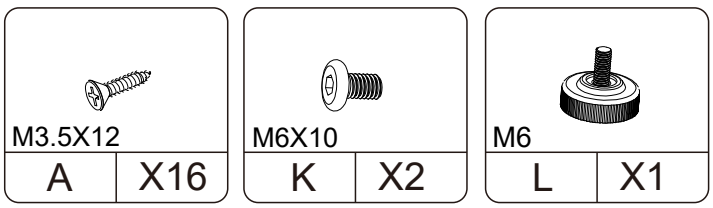

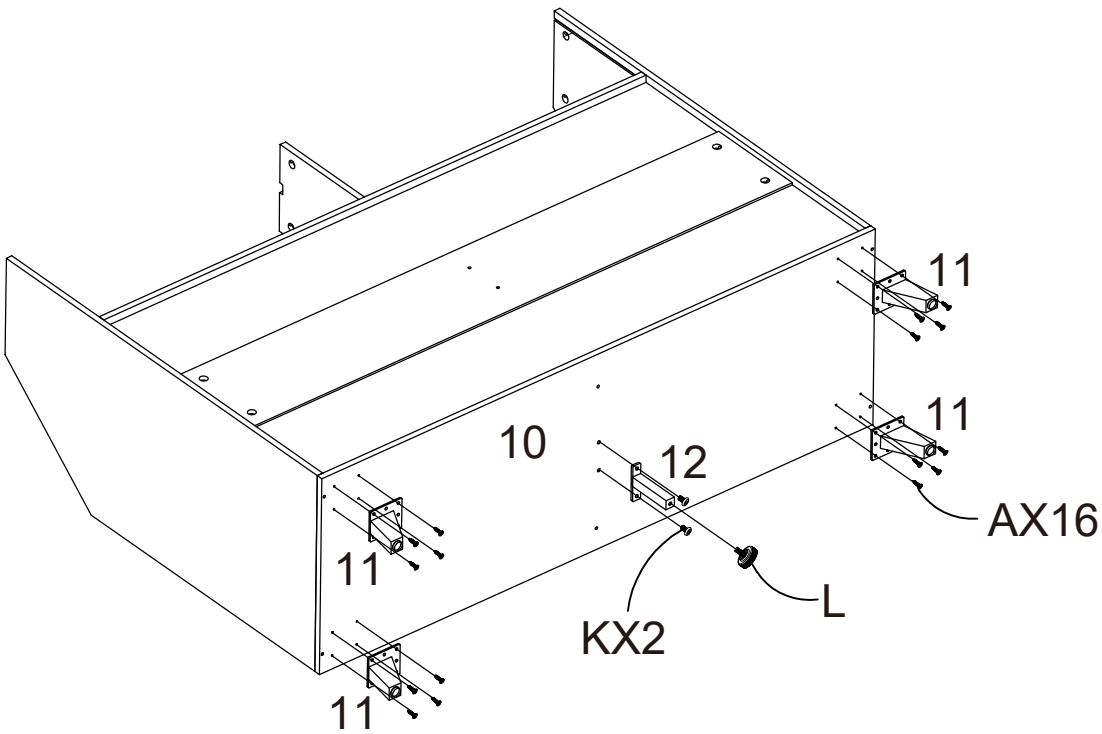

INSTALLATION STEPS

STEP13:

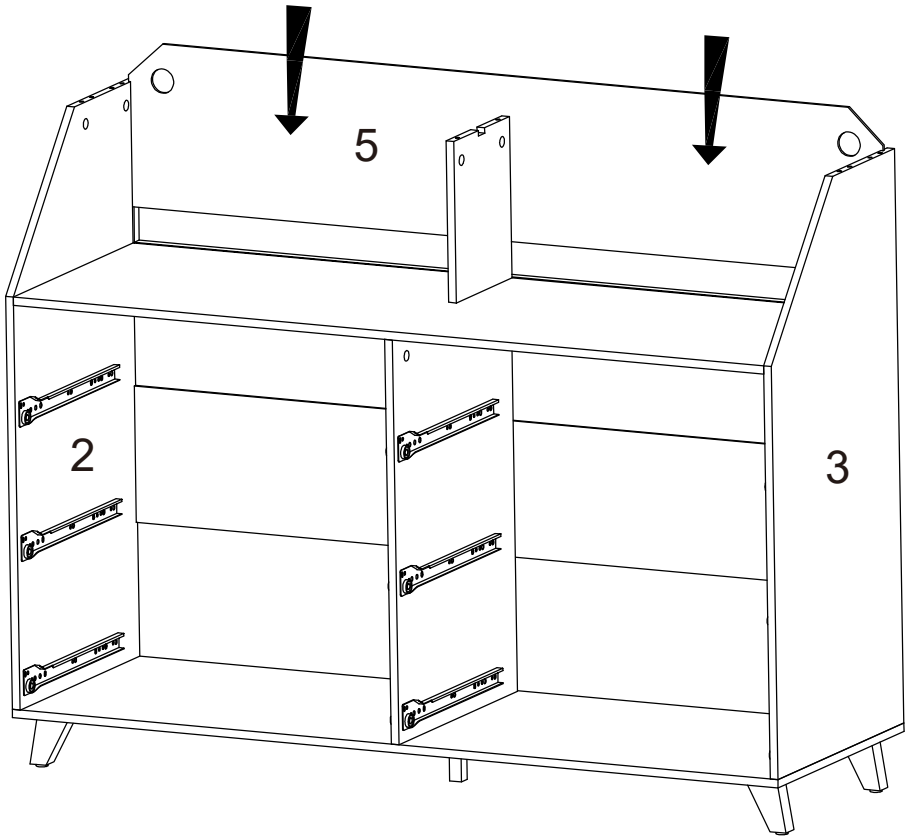

STEP14:

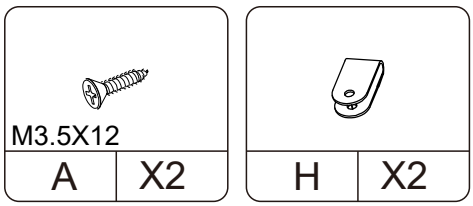

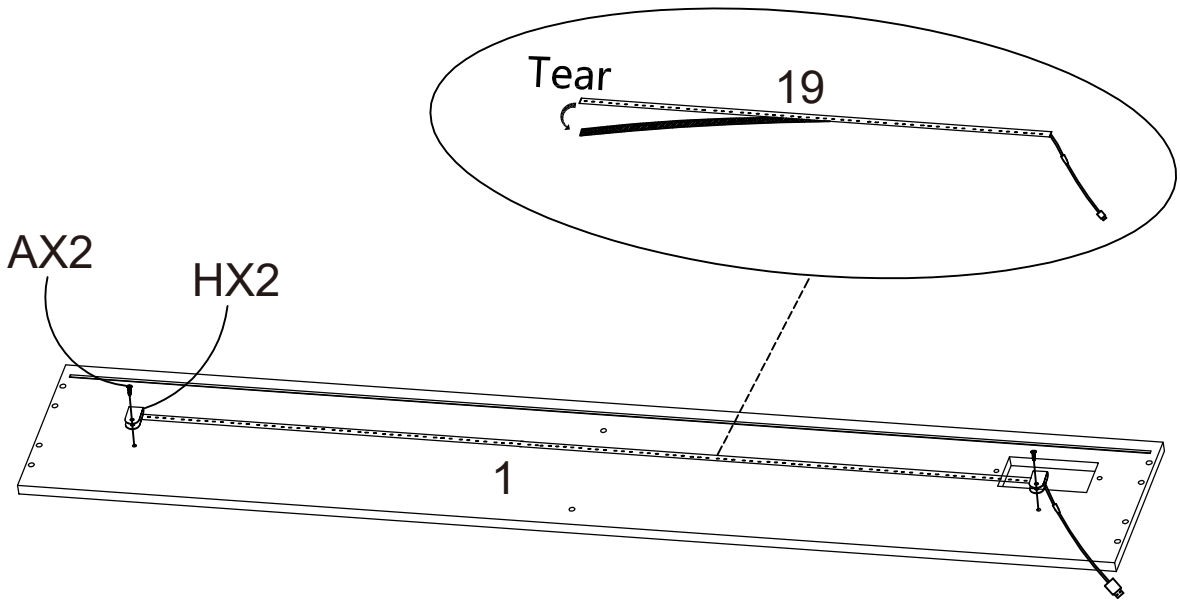

INSTALLATION STEPS

STEP15:

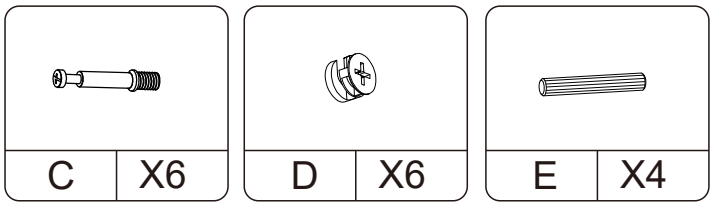

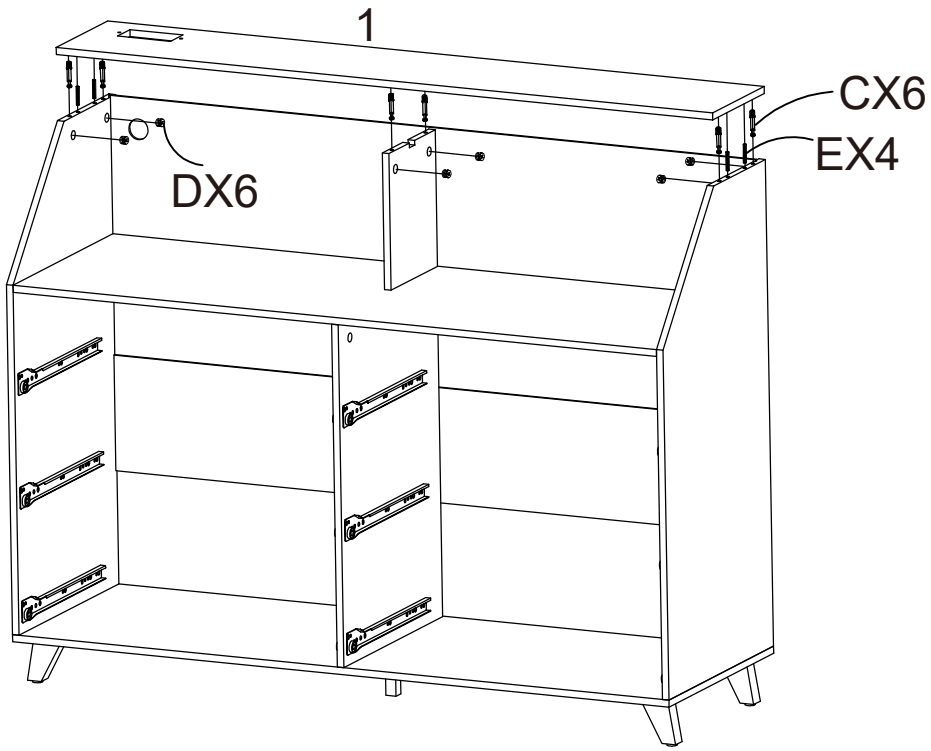

STEP16:

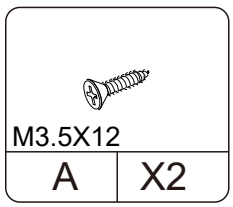

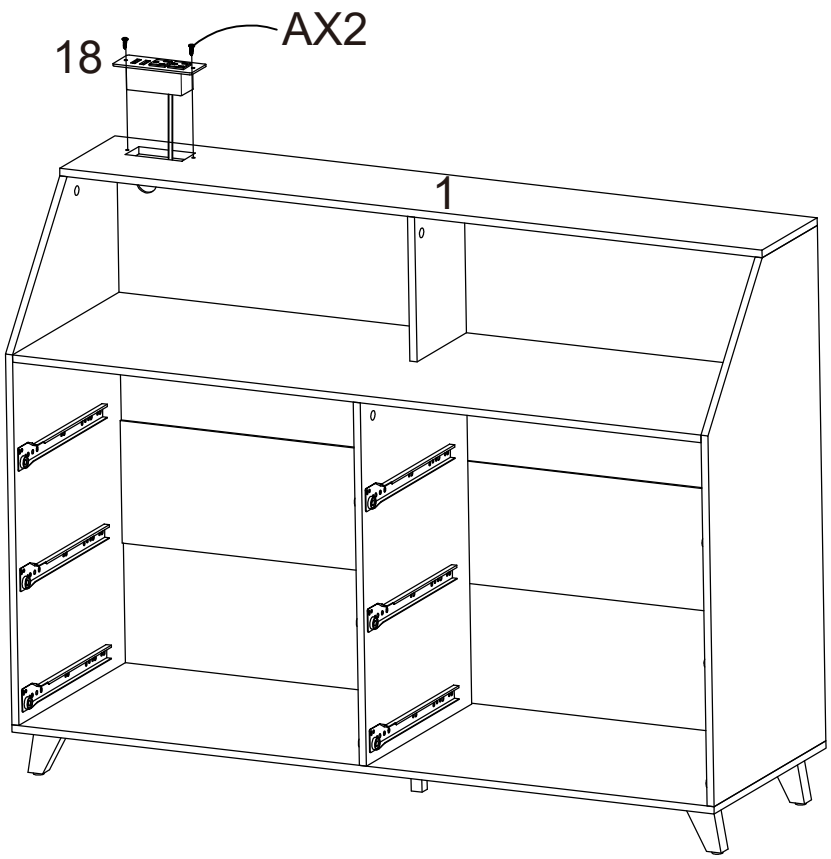

INSTALLATION STEPS

STEP17:

M3.5X12	M4X35			DL DR		M4X15
A X24	B X24	C X24	D X24	F X6	G X6	J X12

E X12

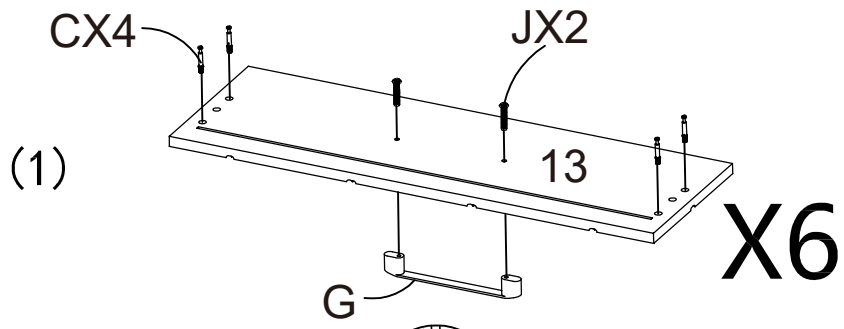

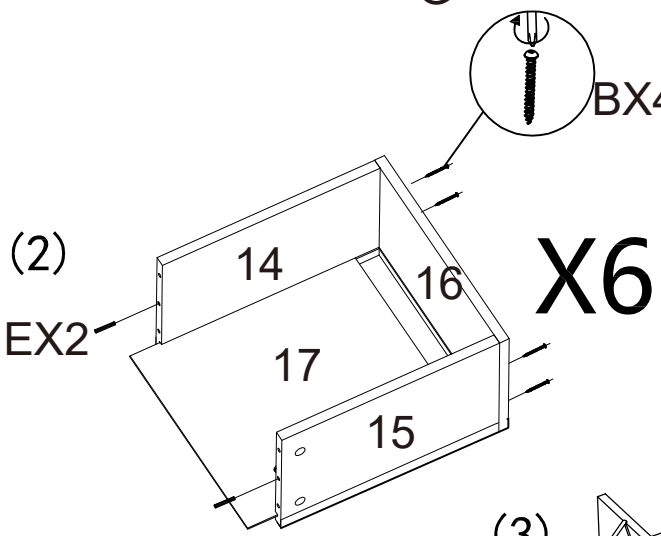

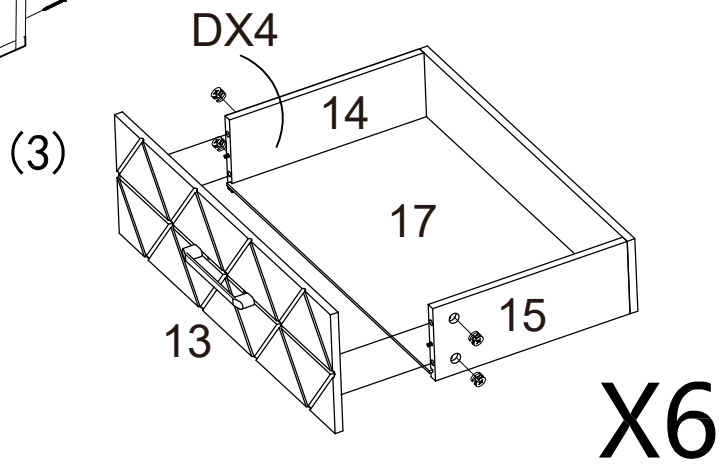

DR:
Install the screws from the first hole from the left and the fourth hole from the right.

DL:
Install the screws from the first hole from the left and the fourth hole from the right.

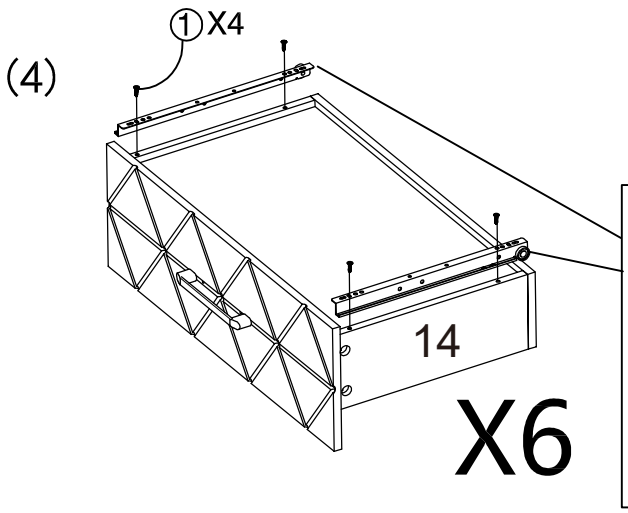

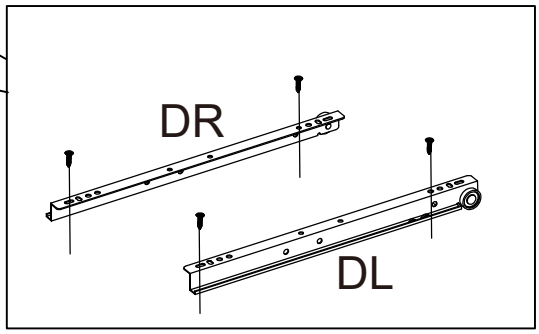

INSTALLATION STEPS

STEP18:

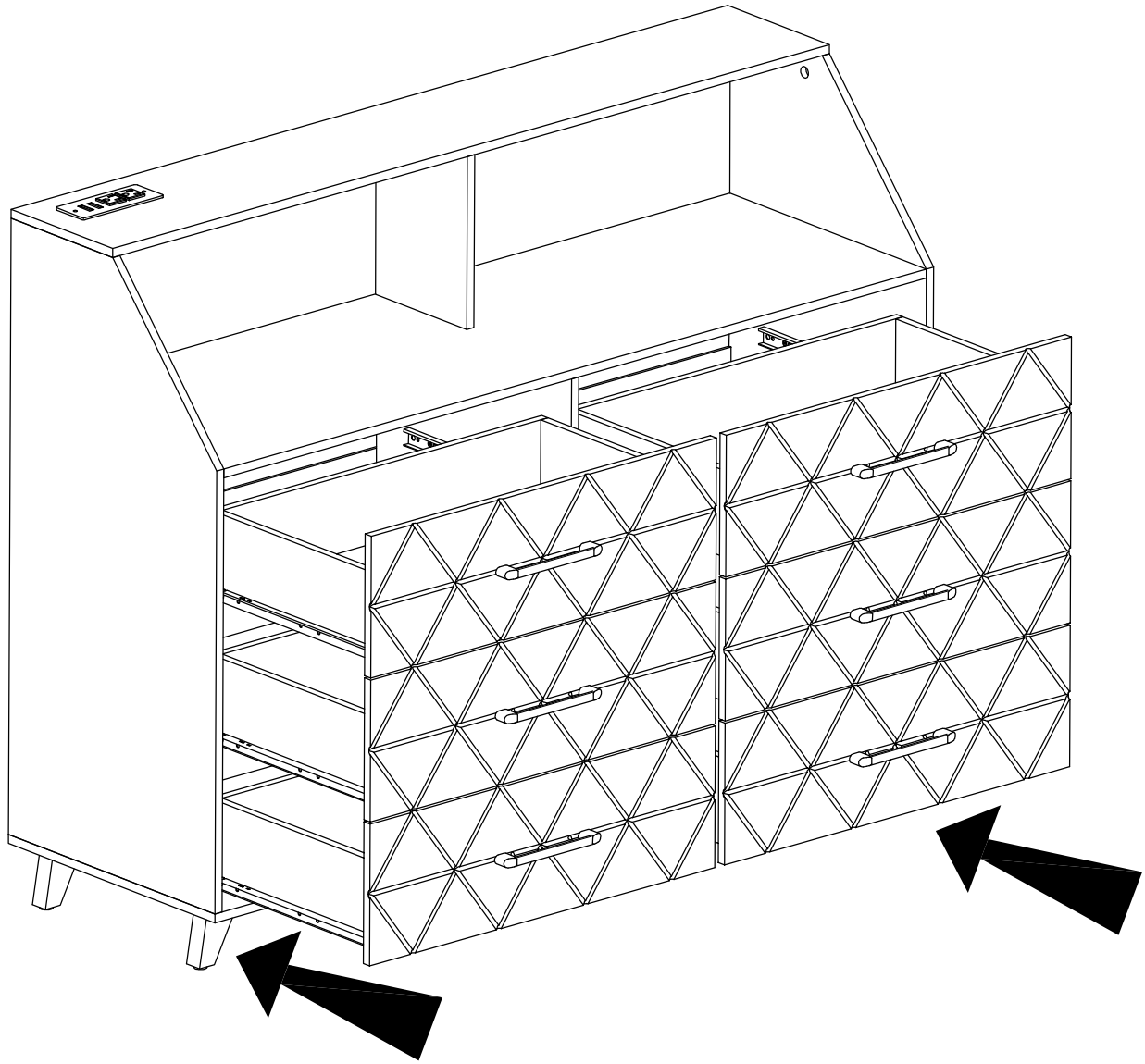

INSTALLATION STEPS

STEP19:

