ITEM NO.	PART NUMBER	DESCRIPTION	QTY.
1	RGSM	HUB	1
2	PSRD8-58	BASE TUBE	1
3	Card-1	END LOCK	1

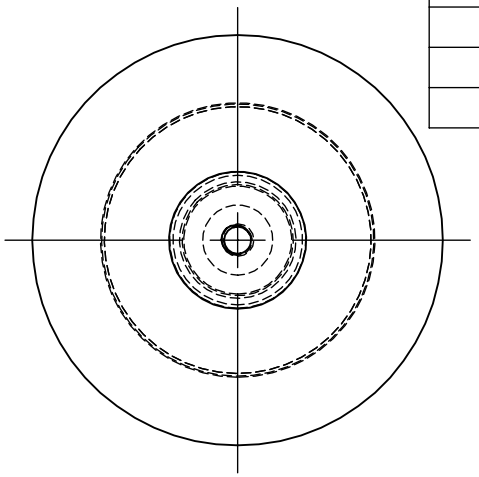

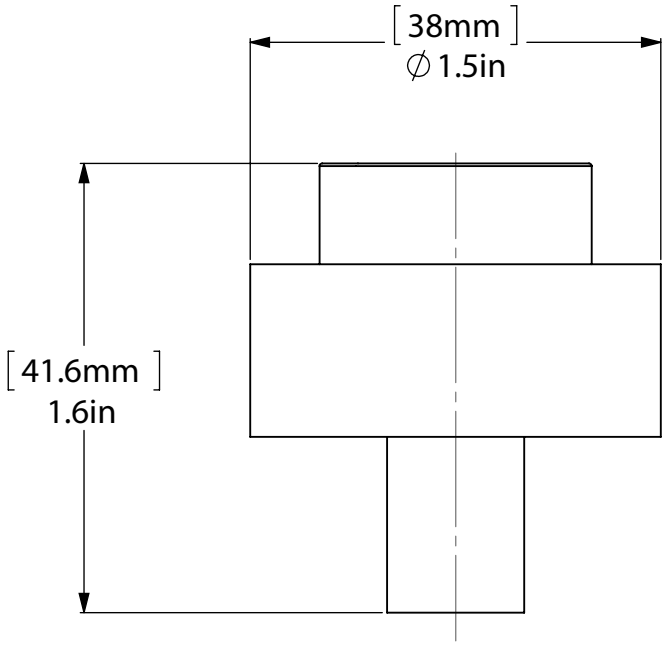

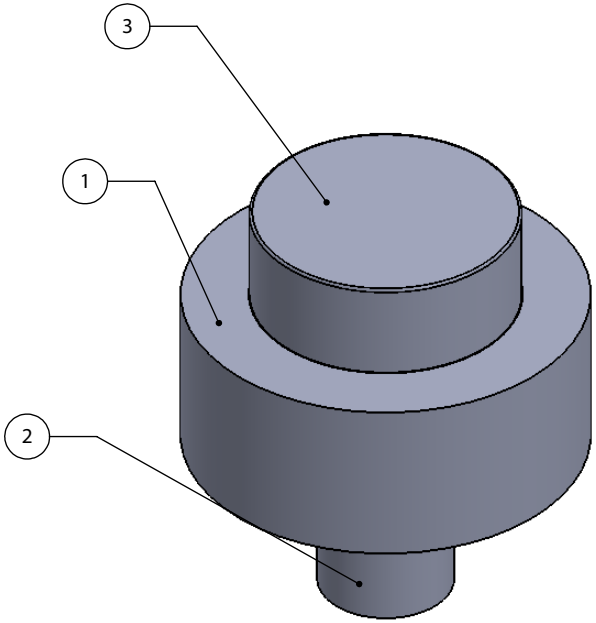

UNLESS OTHERWISE STATED

DO NOT SCALE DRAWING

CHAMFER ALL EDGES 0.5X45

DRAWING ISO

FIRST ANGLE PROJECTION

X.XXX	+/-0.025
X.XX	+/-0.1
X.X	+/-0.25
X	+/-0.75

ANGLES

X.XX	+/-0.05°
X.X	+/-0.1°
X	+/-0.5°

MACHINED FINISH 3.2

MATERIAL	BRASS	WEIGHT		FINISH	TBD
HEAT TREAT	NA			QUANTITY	

DESCRIPTION: