ASSEMBLY INSTRUCTION
6 DRAWER CHEST

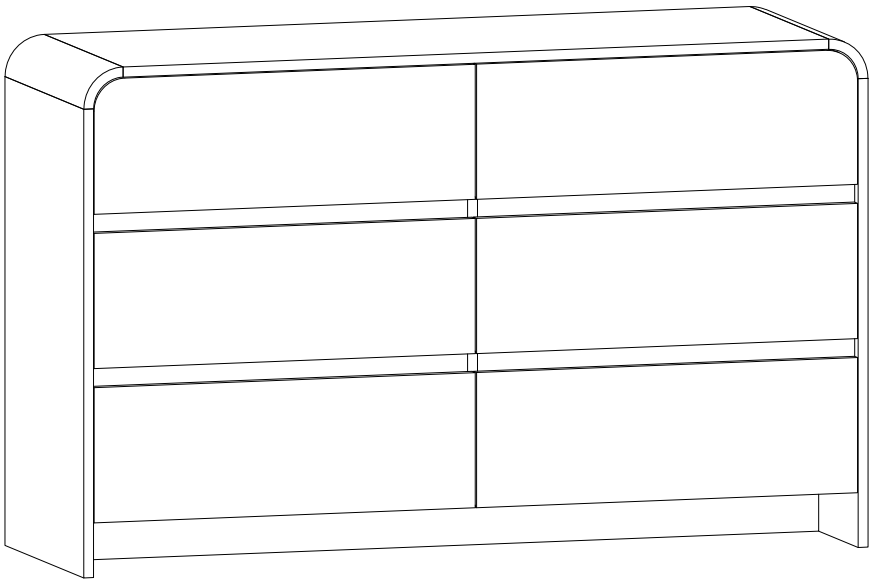

* Before you begin, please read the Assembly Instruction carefully, identify all the parts, and hardware included. Do Not skip any steps and follow the assembly steps in order.

* Place parts on the carton while installing to prevent damage or scratches. Be sure to check all packing materials carefully for small parts may have come loose inside the cartoon during shipment. If parts are missing, contact the retailer from which your purchased the product to obtain any missing part. DO NOT USE SUBTITUTE PART.

* Some steps may require two or more people, do not attempt by yourself as there is a risk injury.

IMPORTANT, RETAIN FOR FUTURE REFERENCE: RE`AD CAREFULLY

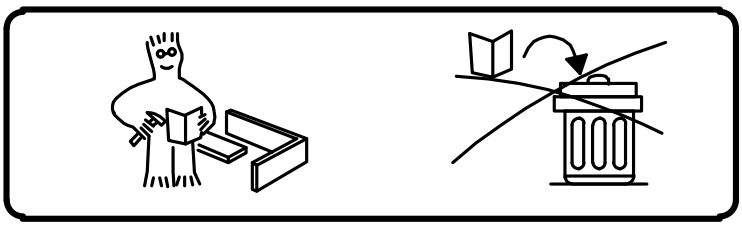

Assemble on a flat, clean and soft surface

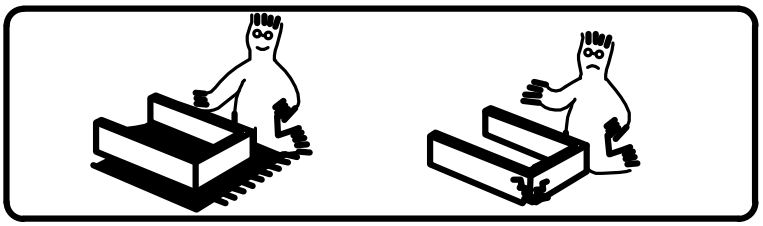

Assemble on a flat, clean and soft surface.

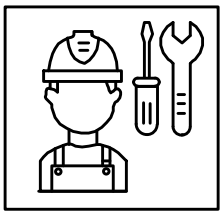

Professional installation is highly recommended.

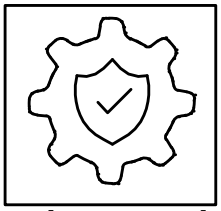

Periodically check that all components are tightly secured.

Never let children climb or hang on drawers, doors, or shelves.



WARNING

Unit can tip over causing severe injury or death.
Anchor unit to stud or wall.
DO NOT allow children to climb on unit.
Put heavy items on lower shelves or drawers.
Read and follow all assembly instruction.

Serious or fatal crushing injuries can occur from furniture tip-over.
Always secure this furniture to the wall using tip-over restraints.



Please have the following auxiliary tools ready:

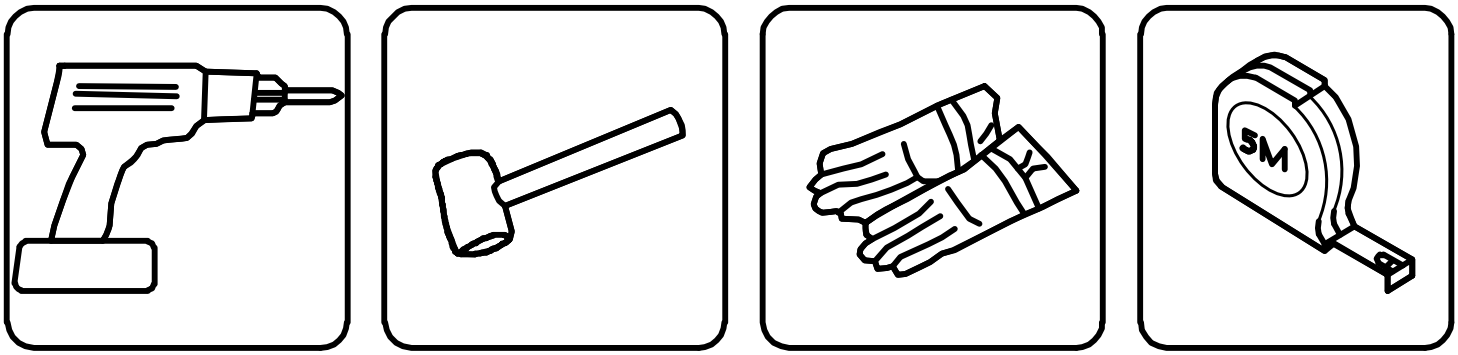

USING CAM LOCK AND QUICKFIT

Tighten QuickFit until the shoulder is flush with the panel. Do not overtighten or undertighten.

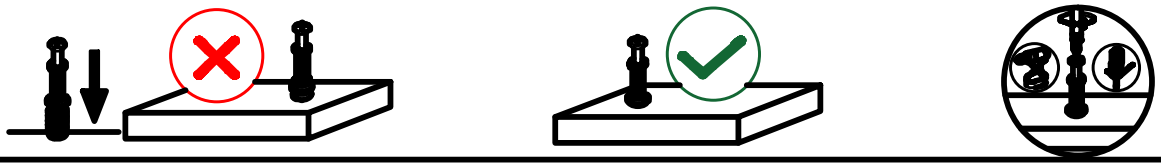

When fitting the cam lock, ensure the starting position is correct before inserting the connecting QuickFit.



The QuickFit head should be in the center of the cam lock when the two panels are joined. The cam lock should be inserted before the QuickFit.
Turn the cam lock clockwise to tighten.



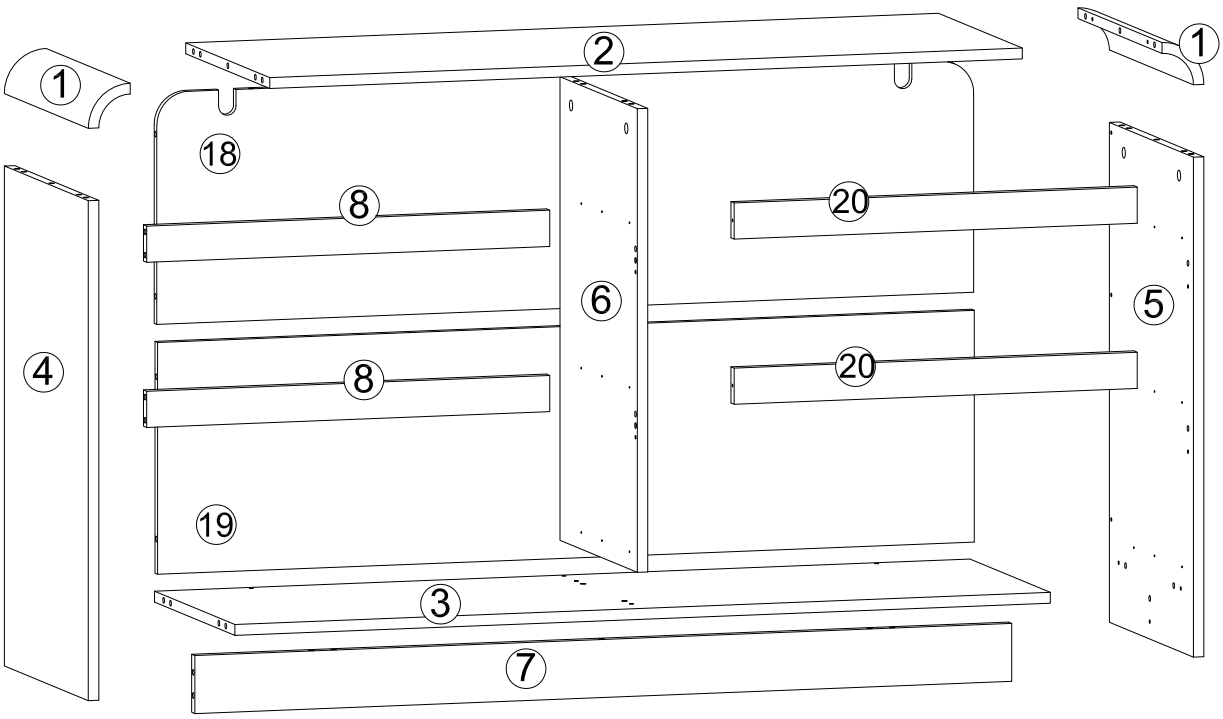
1
2
1
18
8
20
6
5
4
8
20
19
3
7

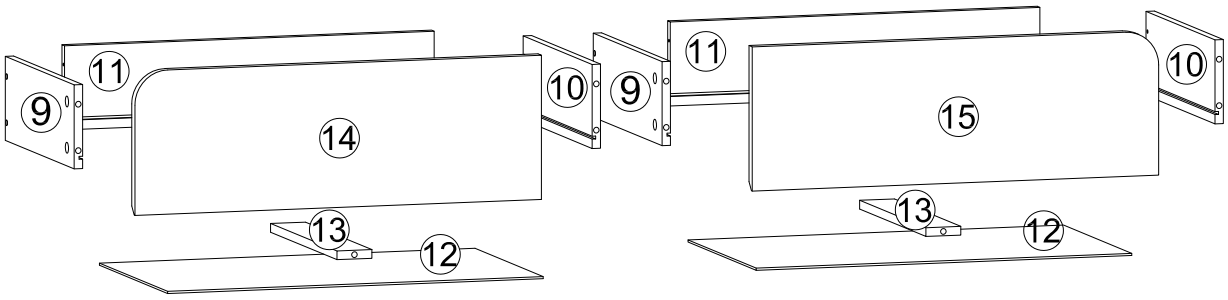
11
9
14
10
9
11
15
10
13
12
13
12

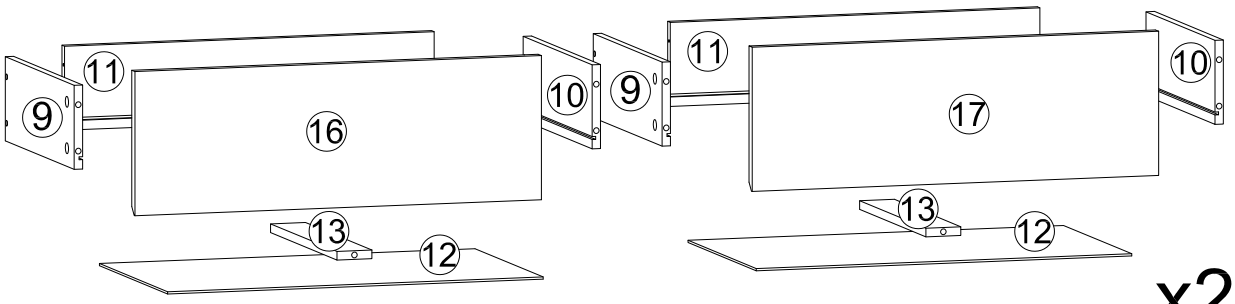
11
9
16
10
9
11
17
10
13
12
13
12

x2

Parts List

1 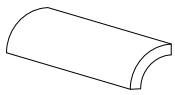 X2	2 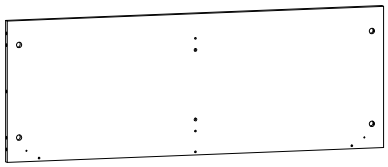 X1	3 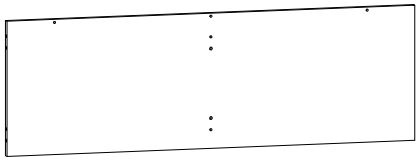 X1
4 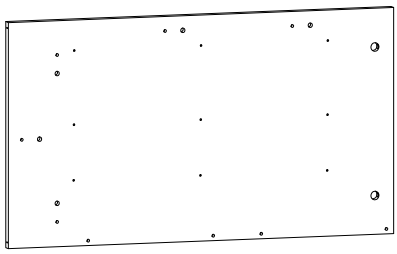 X1	5 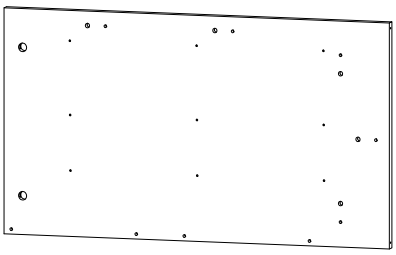 X1	6 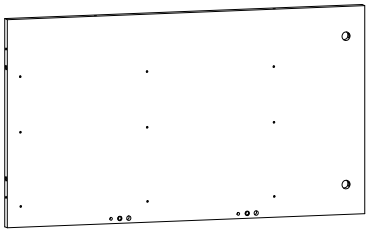 X1
7 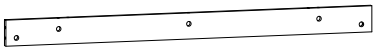 X1	8  X2	9  X6
10  X6	11 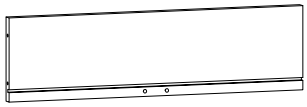 X6	12 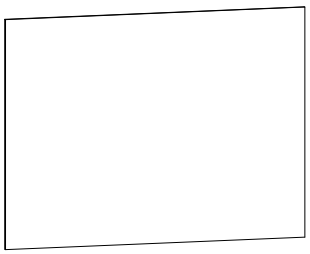 X6
13 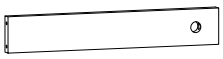 X6	14 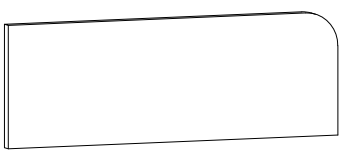 X1	15 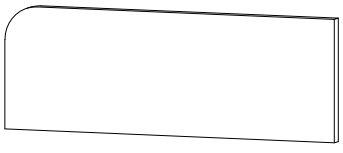 X1

Parts List

16 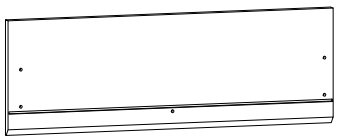 X2	17 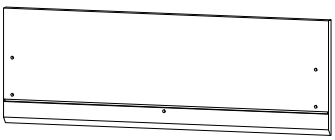 X2	18 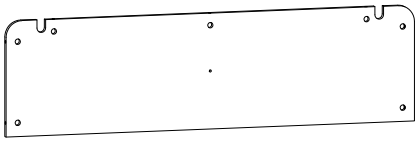
19 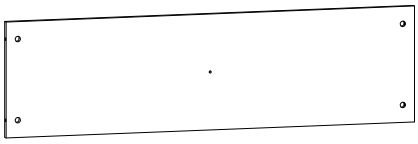 X1	20 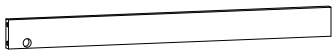 X2	
A 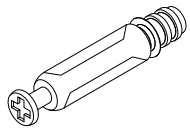 Ø7X40mm X66	B 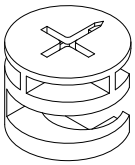 Ø15X9.5mm X66	C 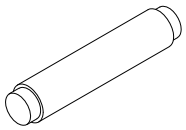 Ø8X30mm X30
D 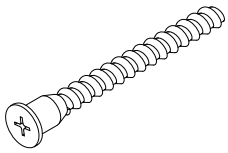 Ø5X38mm X9	E 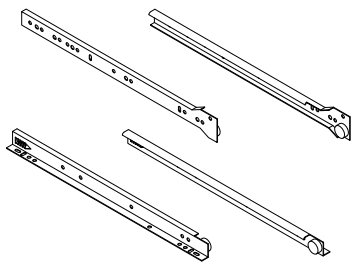 DL+CL DR+CR 300mm X6	F 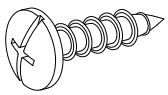 M3.5X12mm X2
G 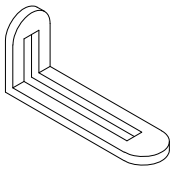 X2	H 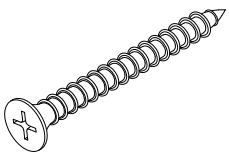 Ø3.5X35mm X36	K 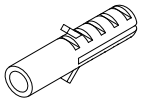 M6 X2

Parts List

L 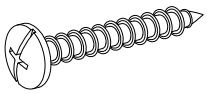 M4X35mm X2	M 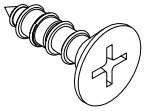 Ø3.5X12mm X72	

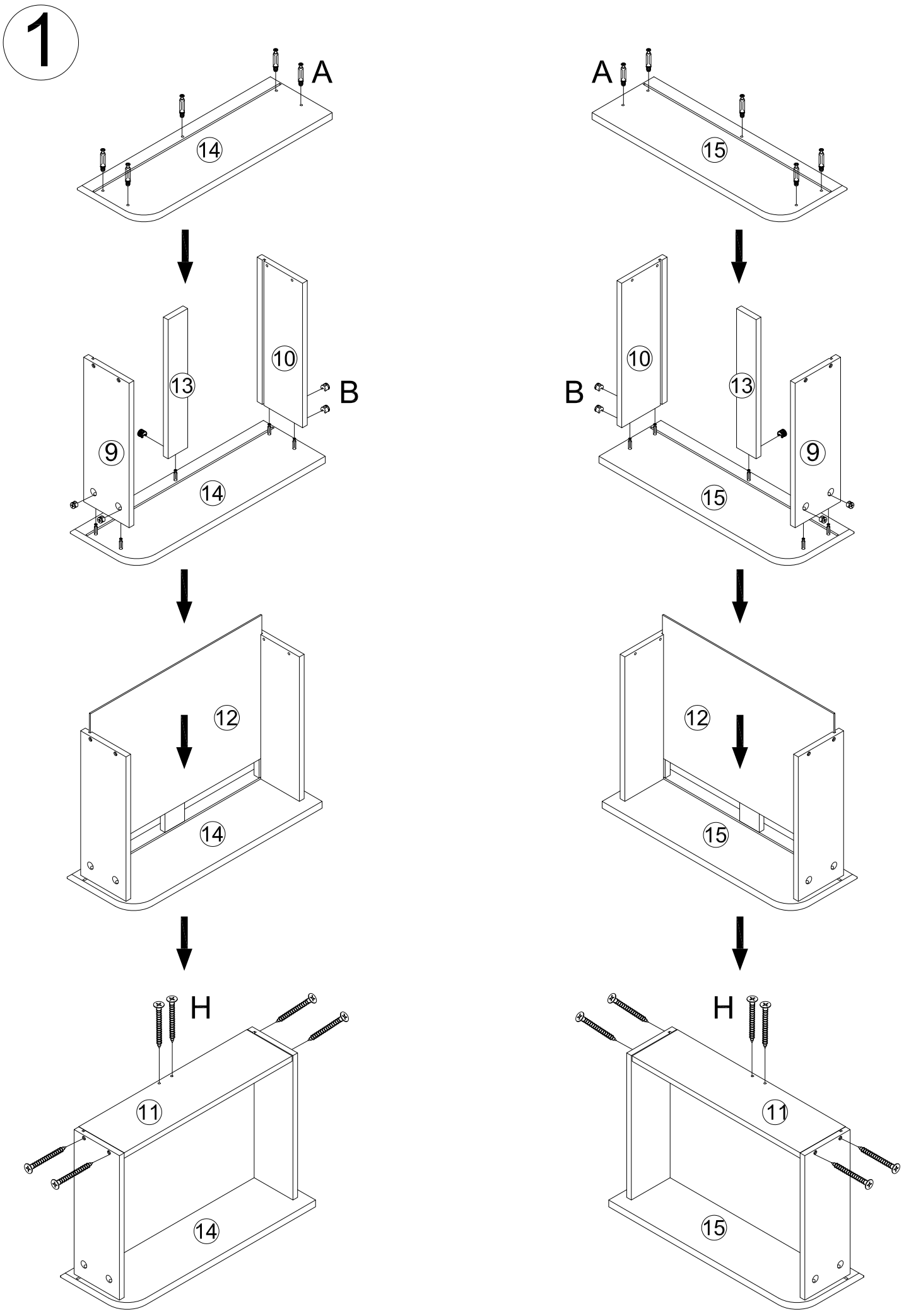
1
A
14
A
15
10
B
13
9
14
B
10
13
9
15
12
14
12
15
H
11
14
H
11
15

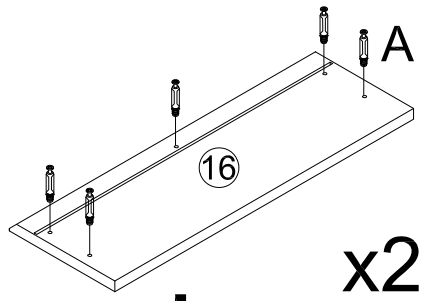

x2

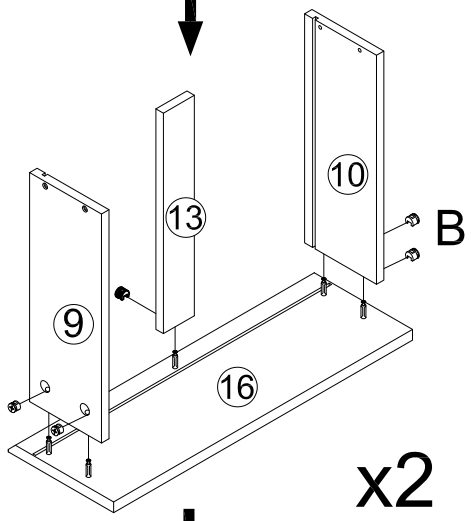

x2

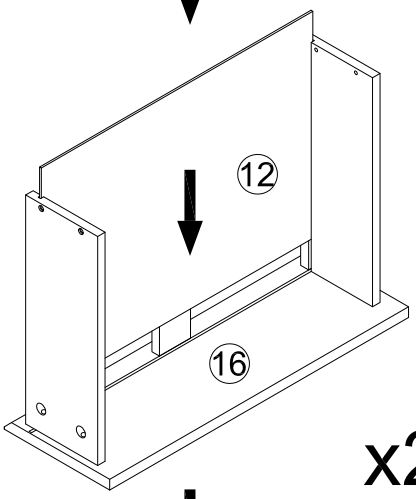

x2

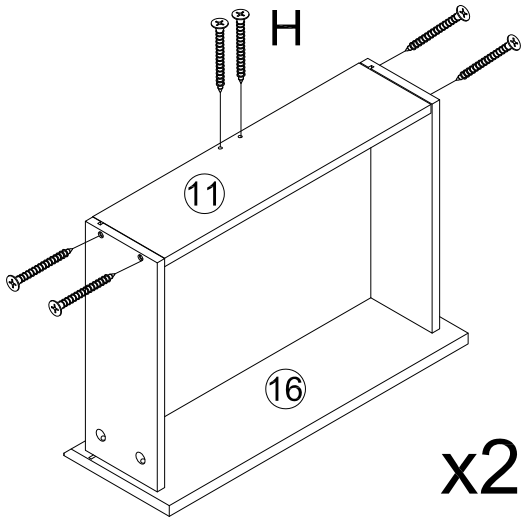

x2

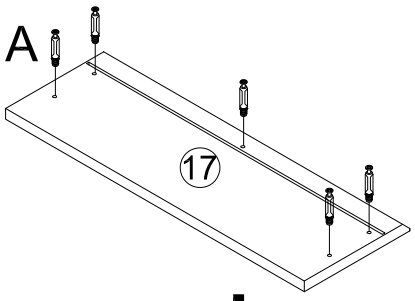

x2

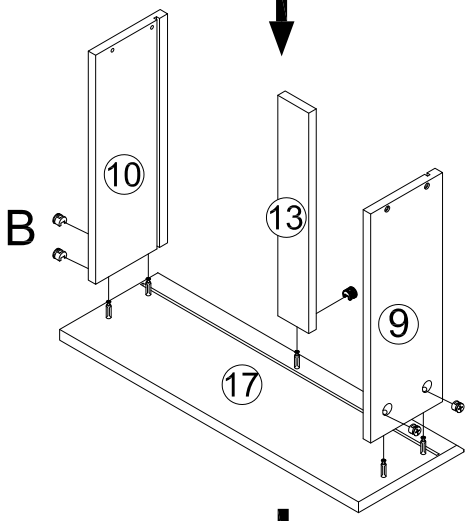

x2

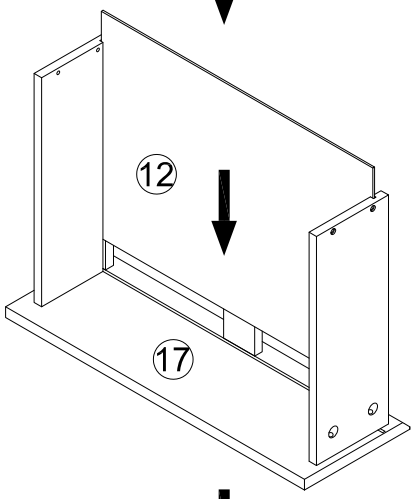

x2

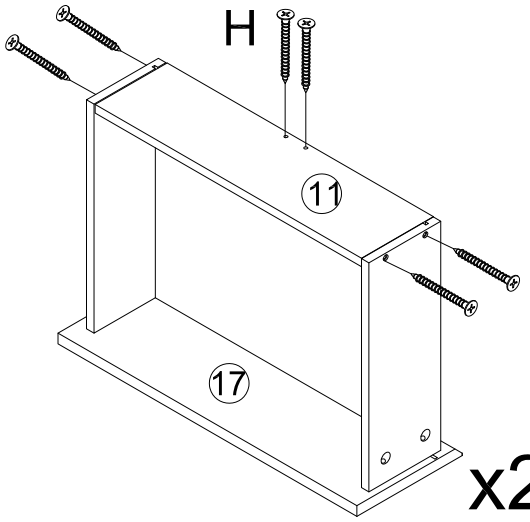

x2

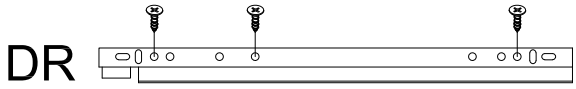

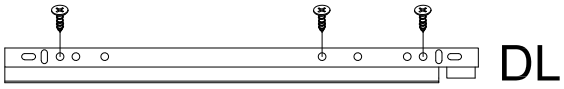

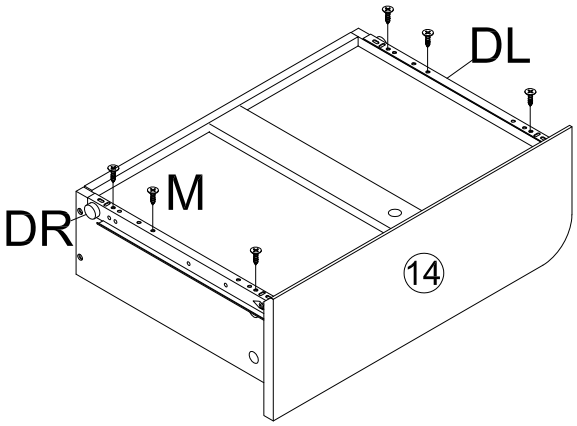

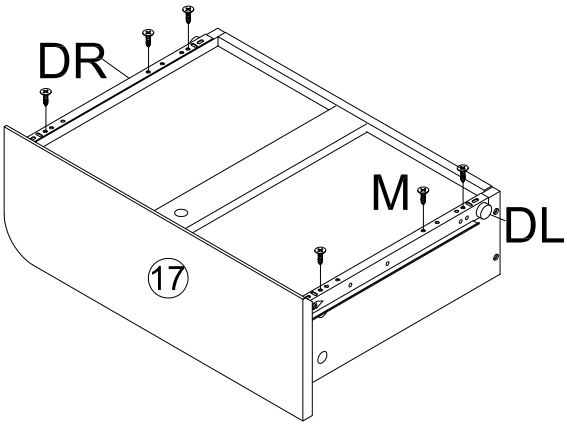

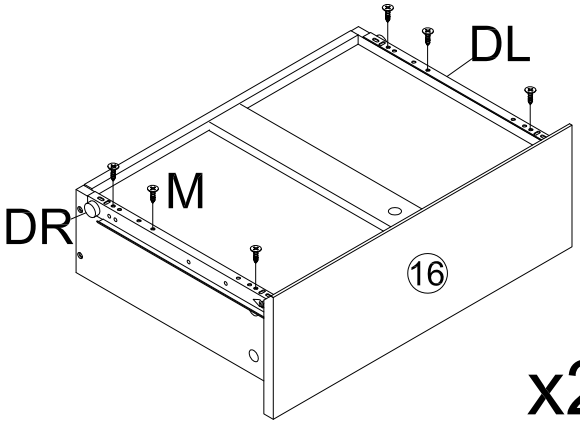

x2

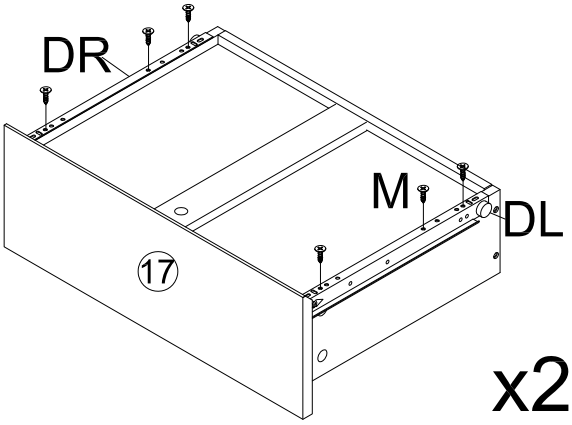

x2

A 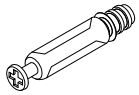 Ø7X40mm X30			
B  Ø15X9.5mm X30	E 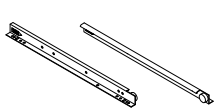 DR+DL 300mm X6	H  Ø3.5X35mm X36	M  Ø3.5X12mm X36

2

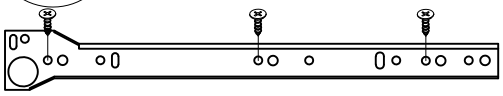

CL

CR

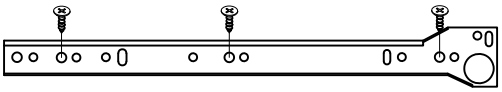

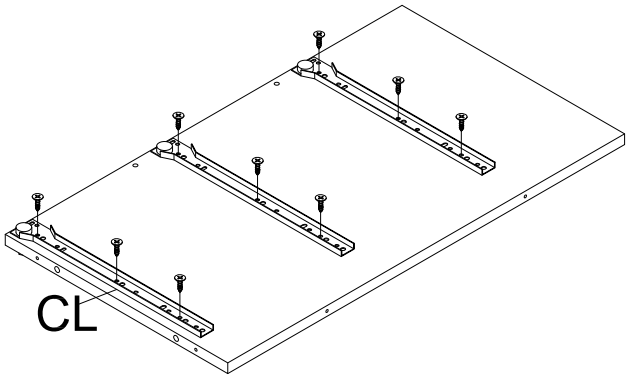

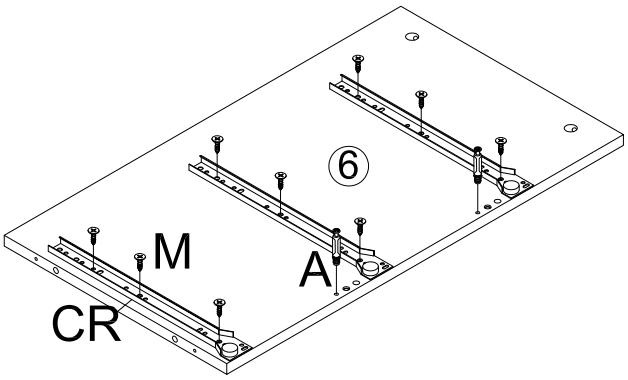

CL

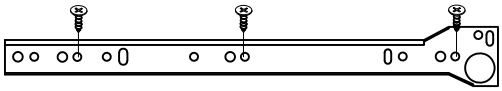

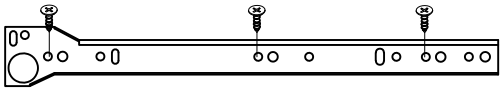

CR

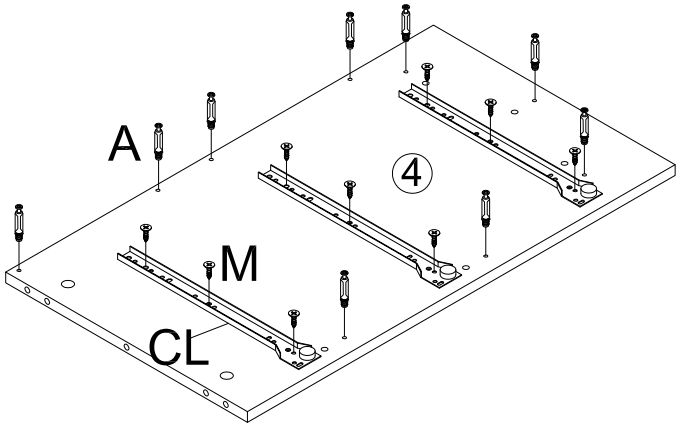

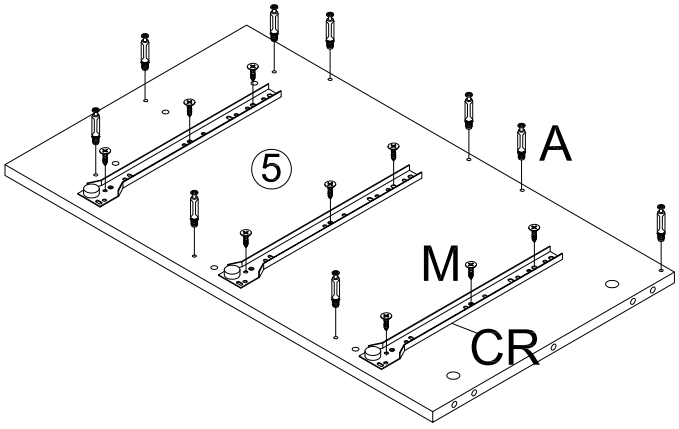

A	E	M
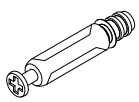	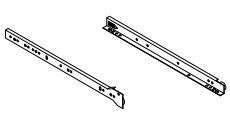	
Ø7X40mm X20	CR+CL 300mm X6	Ø3.5X12mm X36

3

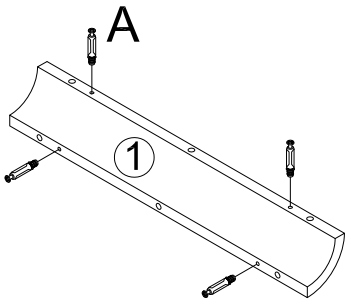

x2

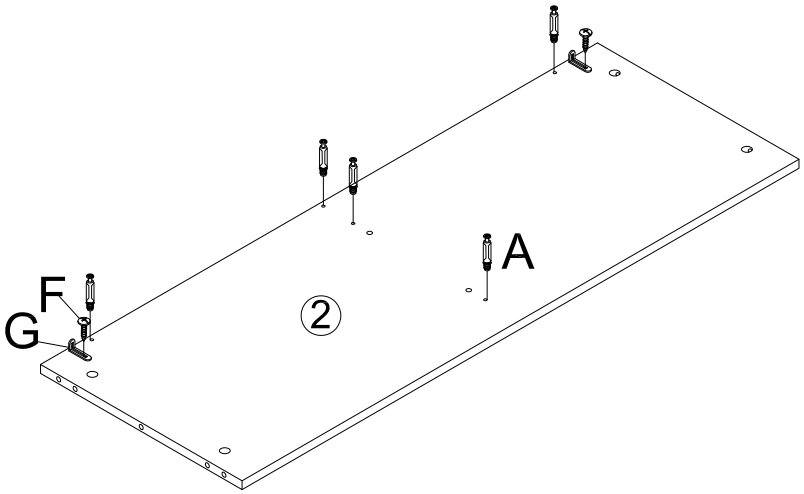

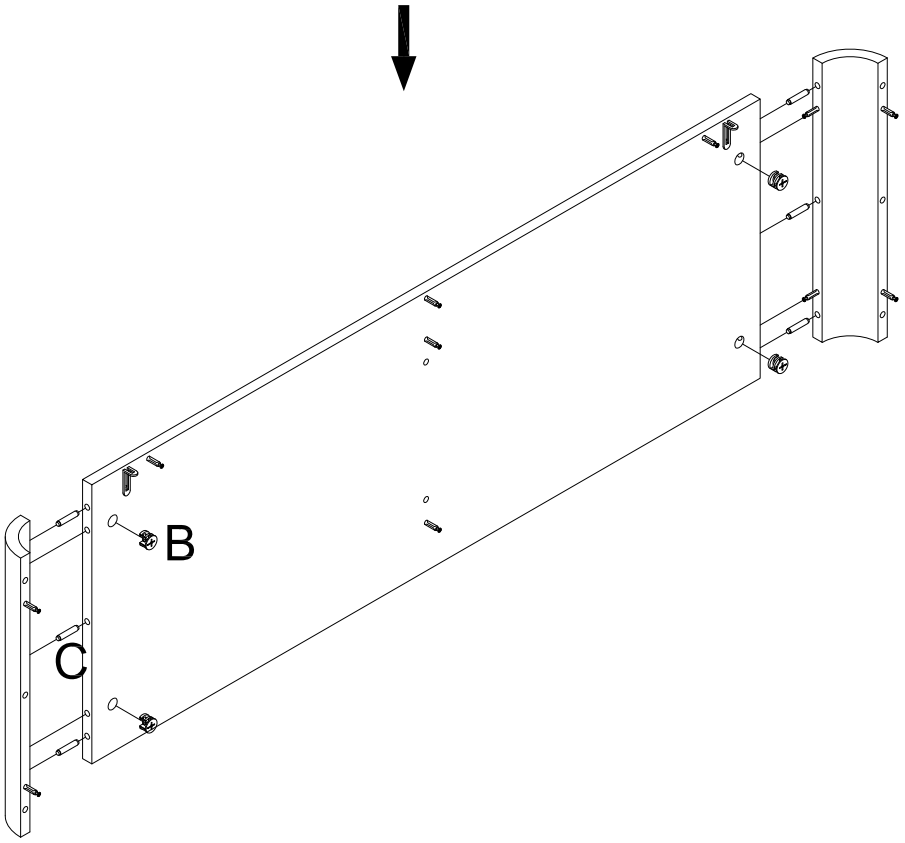

A 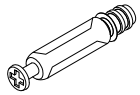 Ø7X40mm X13			
B  Ø15X9.5mm X4	C 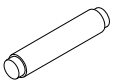 Ø8X30mm X6	G 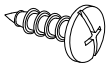 M3.5X12mm X2	F 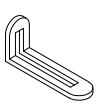 X2

4

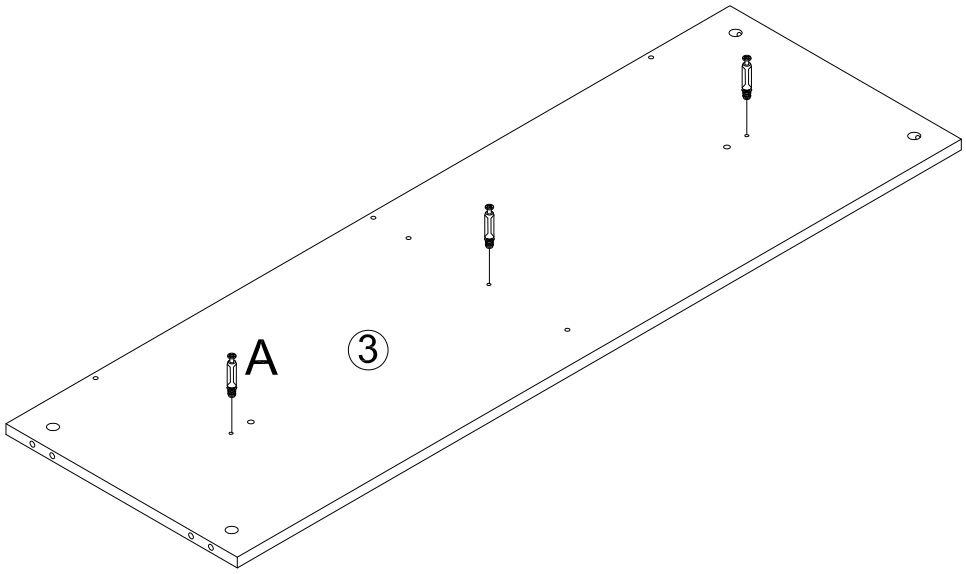

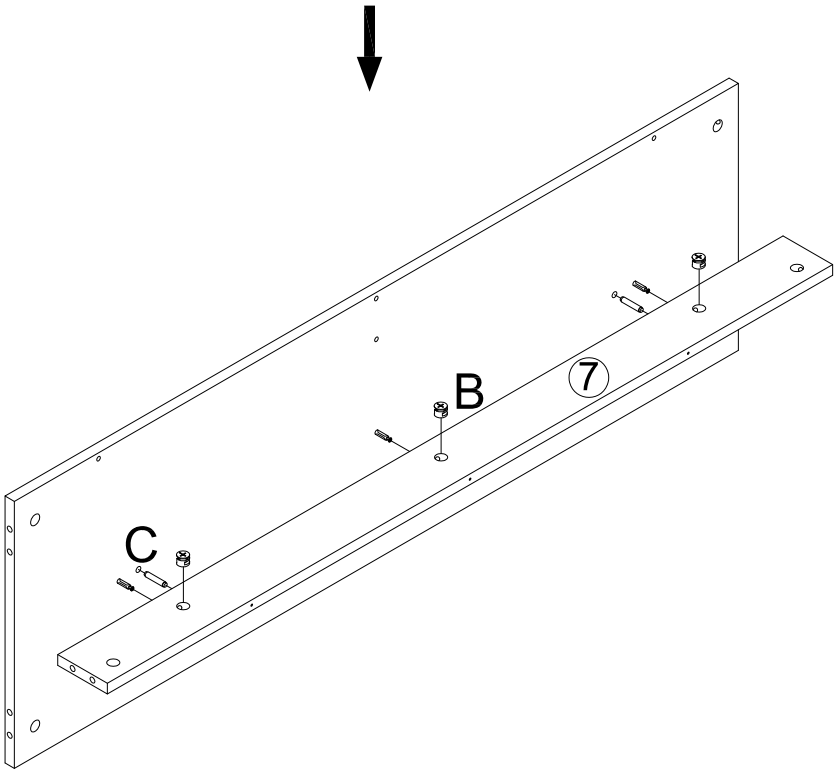

A	B	C
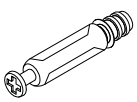 Ø7X40mm X3	 Ø15X9.5mm X3	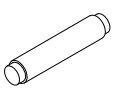 Ø8X30mm X2

5

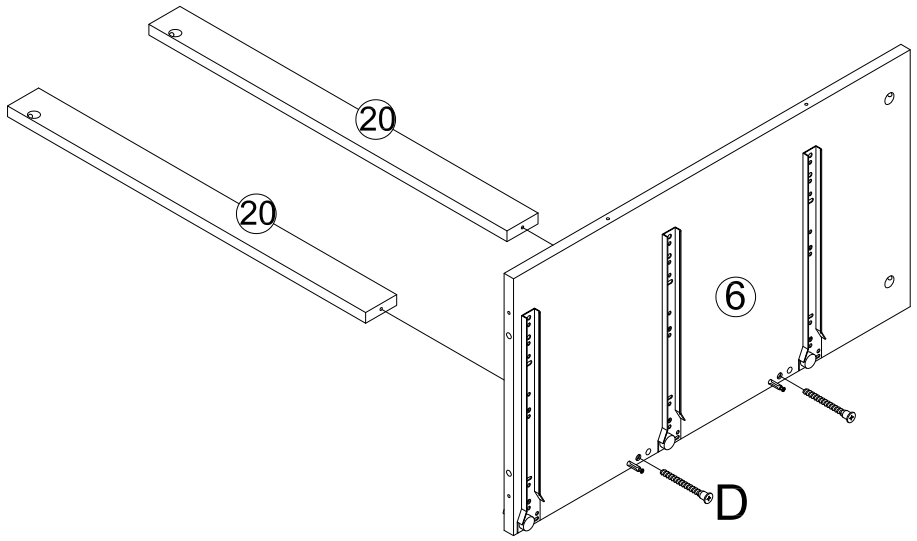

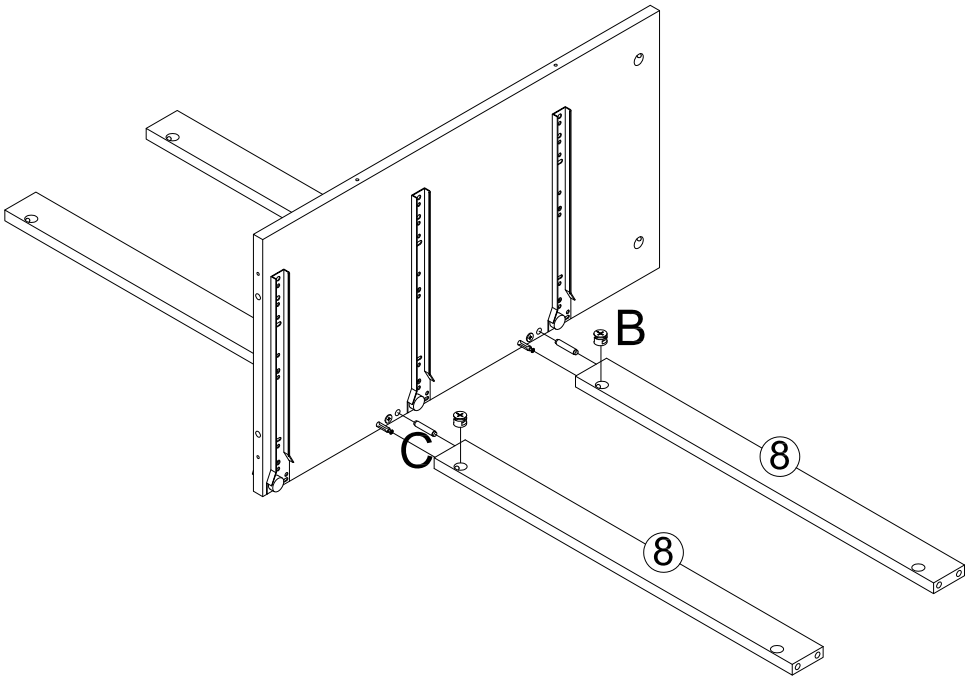

B	C	D
 Ø15X9.5mm X2	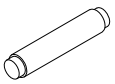 Ø8X30mm X2	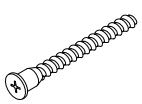 Ø5X38mm X2

6

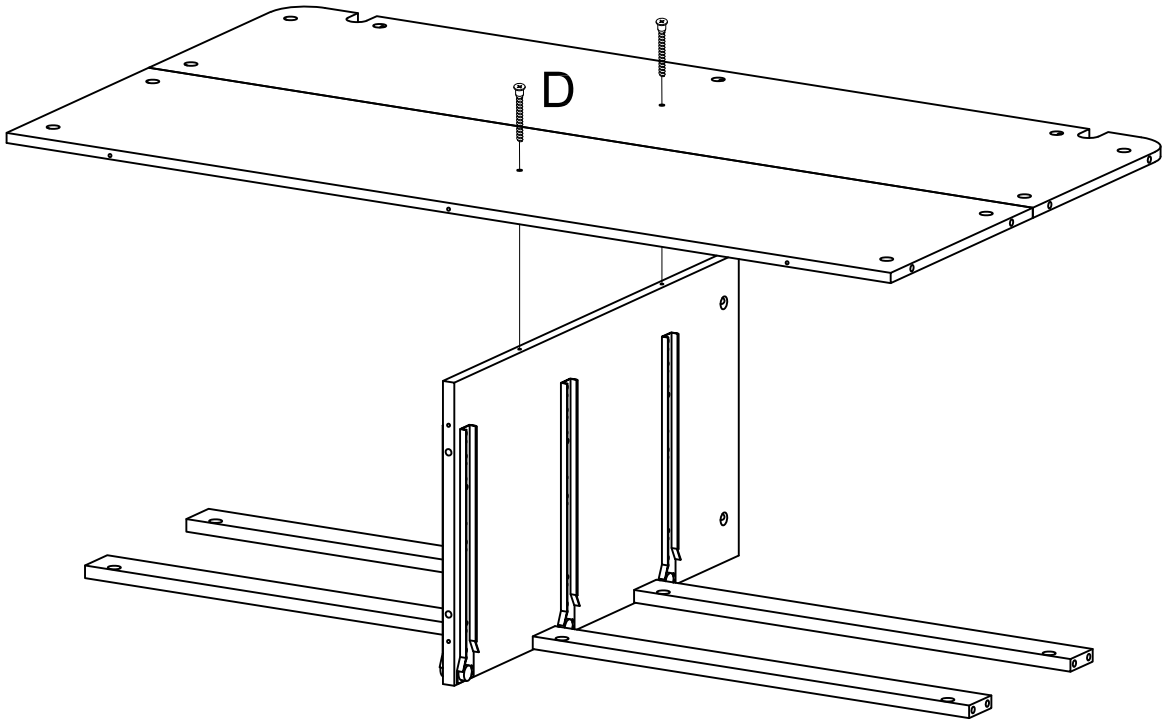

D

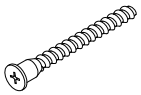

Ø5X38mm X2

7

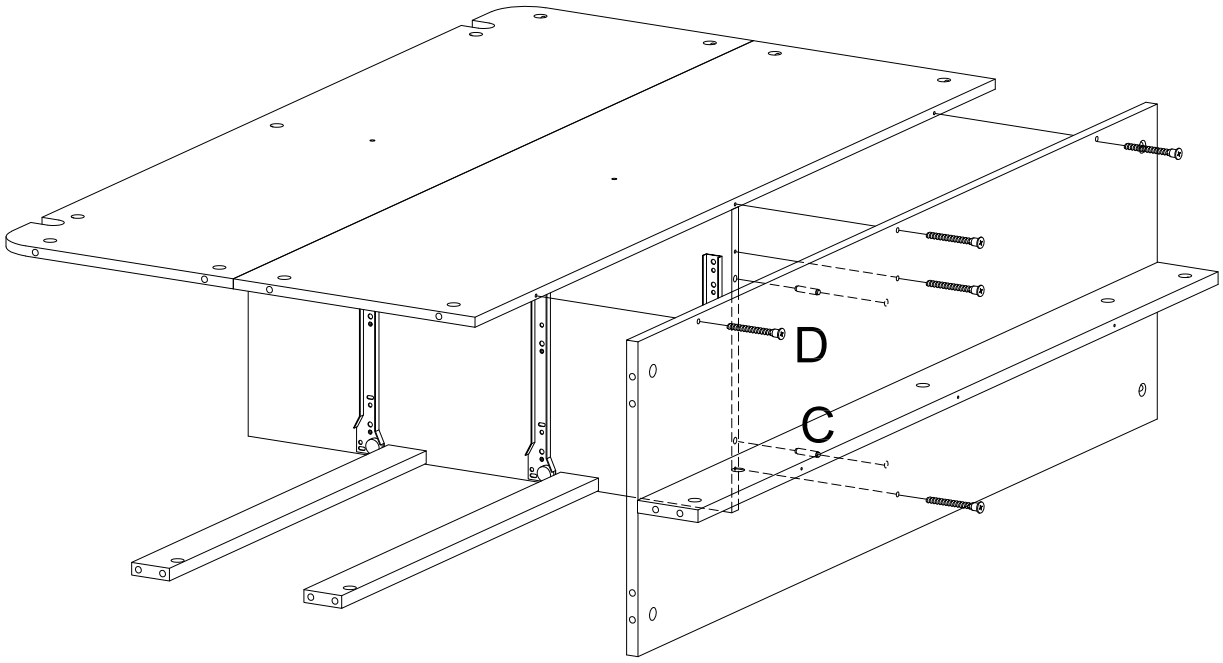

C

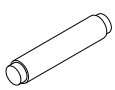

Ø8X30mm X2

D

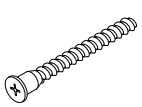

Ø5X38mm X5

8

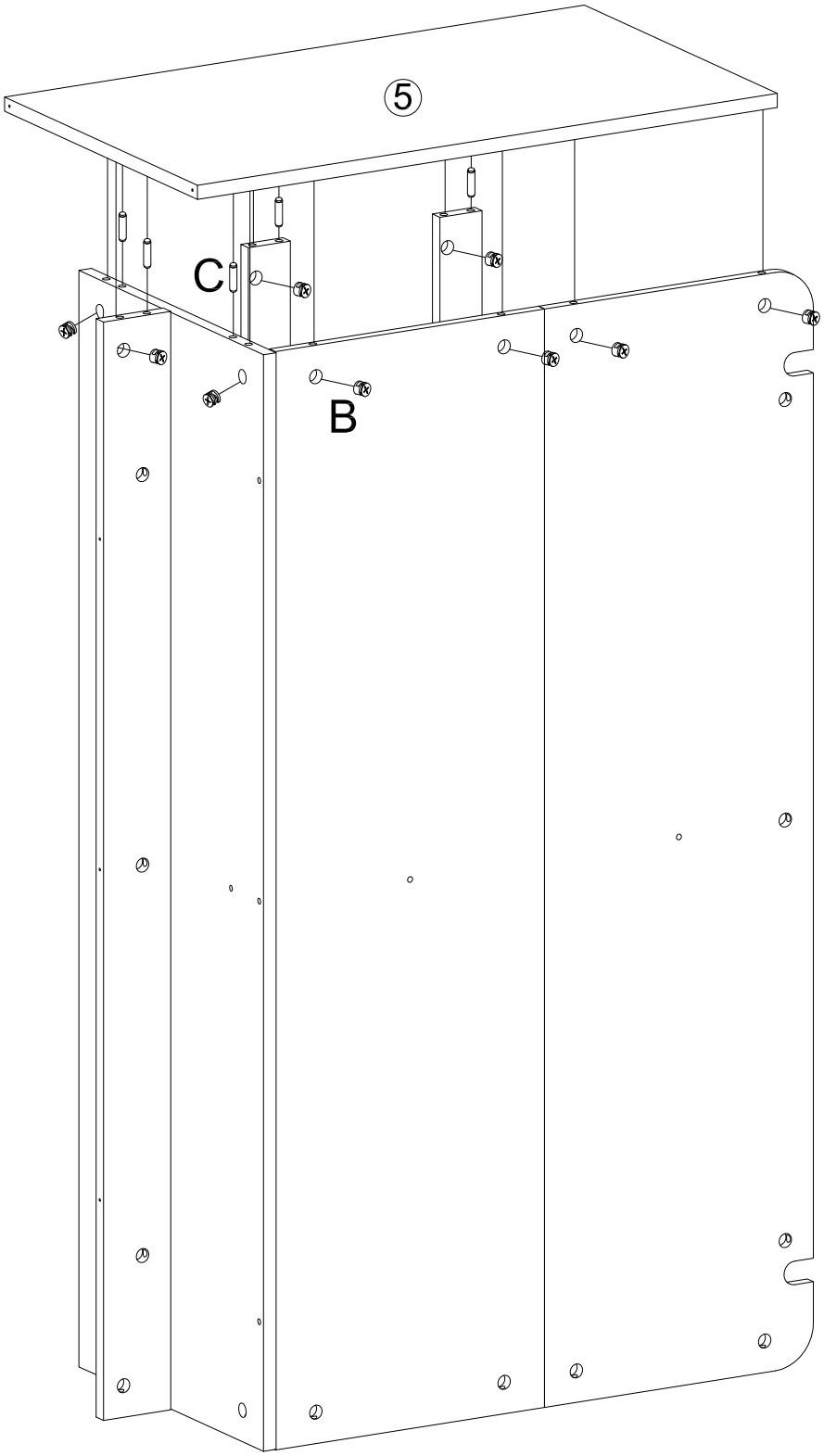

B	C
 Ø15X9.5mm X9	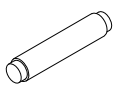 Ø8X30mm X5

9

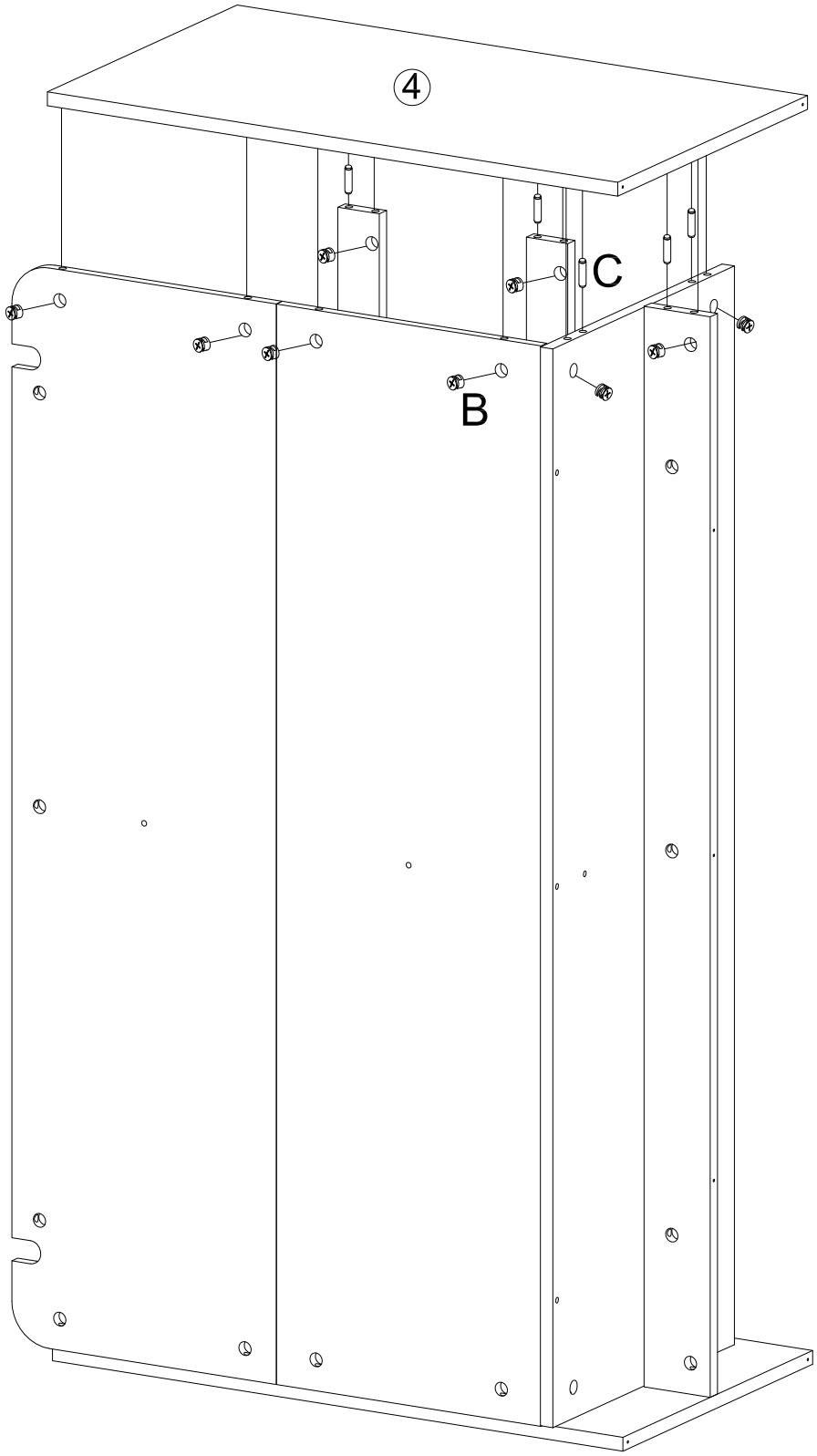

B	C
 Ø15X9.5mm X9	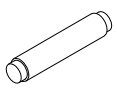 Ø8X30mm X5

10

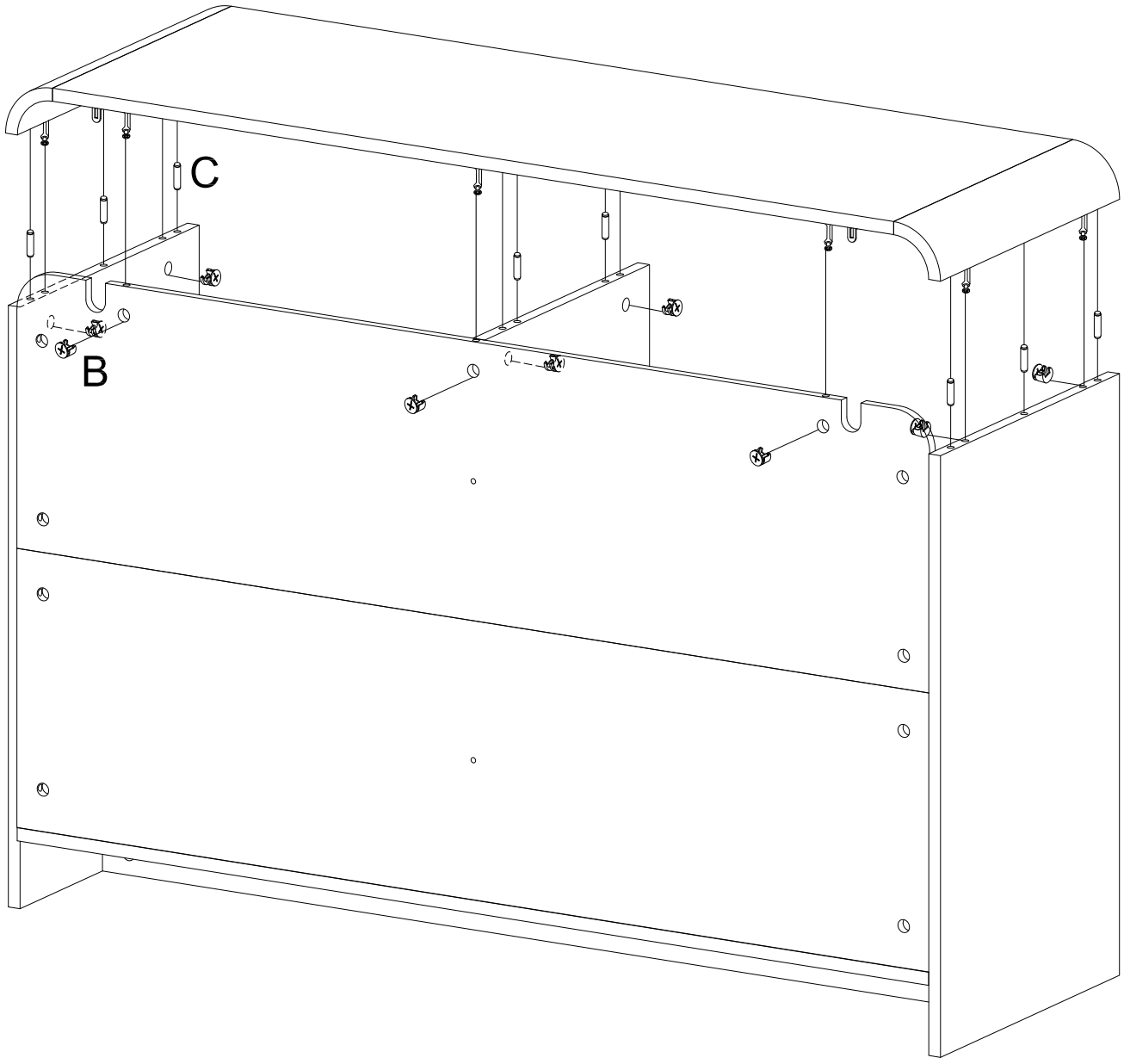

B	C
 Ø15X9.5mm X9	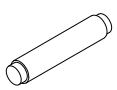 Ø8X30mm X8

11

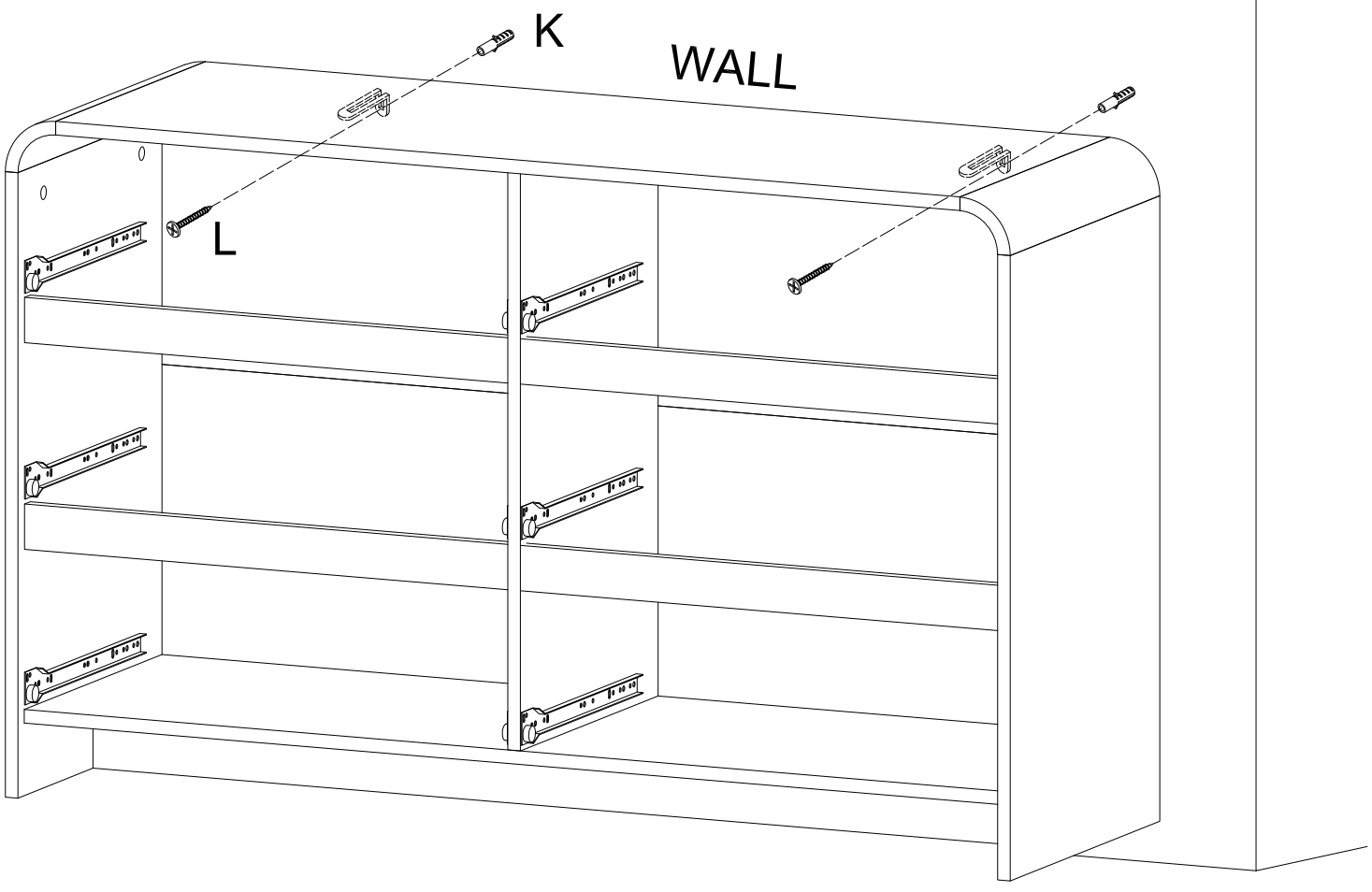

K	L
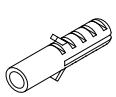	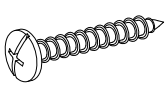
M6 X2	M4X35mm X2

12

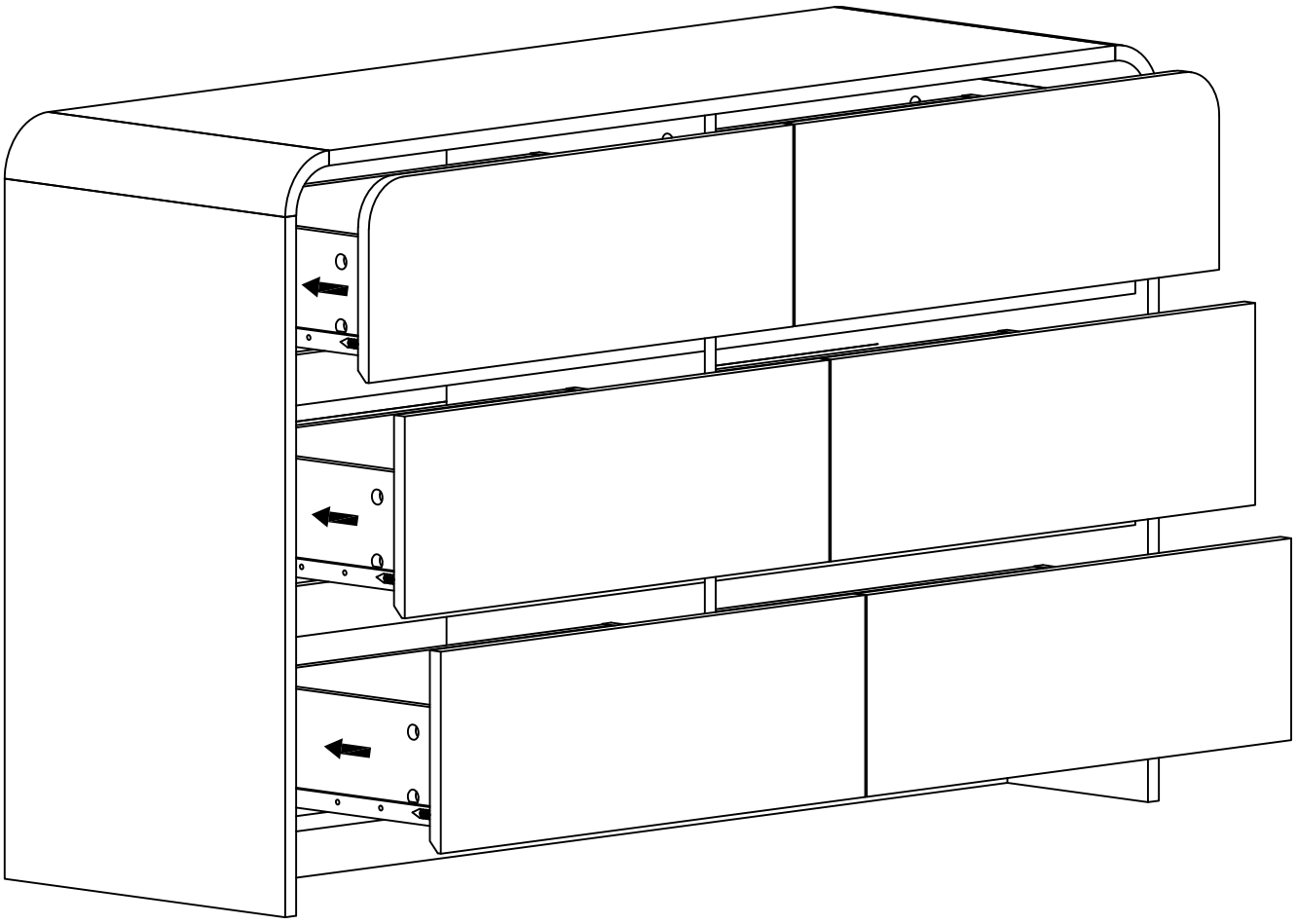

CARE AND MAINTENANCE

WARNING:

·Do not place very hot or cold items on the dresser surface unless adequately thick mats are used to prevent such items coming in contact with the dresser.

·Do not sit or stand upon the dresser surface.

·Do not use the dresser as a chopping surface.

·Do not strike the dresser with hard or pointed items.

·When cleaning the table panels use a damp cloth or leather with washing-up liquid or soft soap if necessary. Do not use washing powders or any other substances containing abrasives since these may scratch the dresser.

Please contact after sales e-mail: service.ch123@gmail.com with your order id if you need any assistance, we will provide prompt help during working hours.