INSTRUCTION



Contact Vitesse Support

Need service or support?
Start your request by Text or Emailing Us .
AND we will find you a Solution.

Free free to Text us or Email us. We will get back to you within 24hrs.
Text us or email us with damaged product pics

WARNING !

Please read the instructions carefully before assembly, and assemble the product properly according to the instructions, don’ t put in use of the product before it is fully assembled. For any damage or defective, kindly contact our online after-sale service staff.

* the features and specifications of the product are subjects to changes without prior notice

* To avoid product damage and personal injury, assemble the product properly.

* To avoid product damage and personal injury, please check the product’ s load capacity and do not support user’ s whole body on the chair arms.

* To avoid personal injury, place the product on the flat ground.

* Do not stand on the product.

* To avoid personally injury, don’ t use the damaged product, and dispose it properly

* Indoor use only

* Only trained people should repair or replace the back angle adjustment component with energy accumulator contained.

* Please keep the instructions in case of further use.

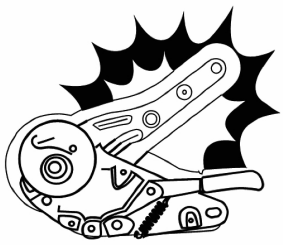

WARNING!

Please keep the product out of reach of the children, it’ s not a toy!

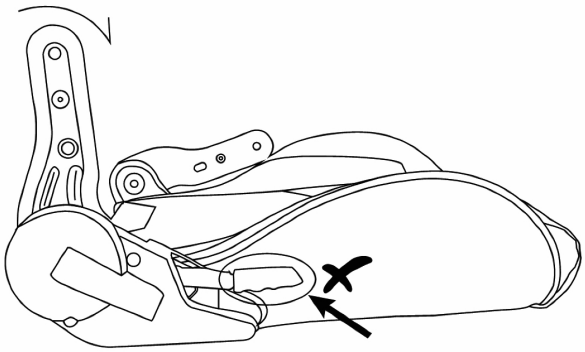

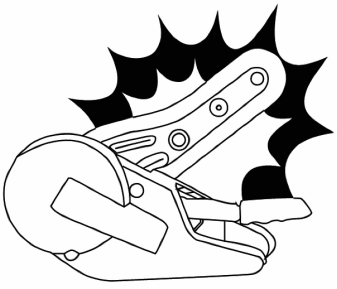

Please be careful when unpacking, to avoid personal injury and other ricks, do not touch the handle during assembly and keep the parts out of reach of the children.

Parts

Check and make sure you get the components on the list, contact us for any missing

A Backrest

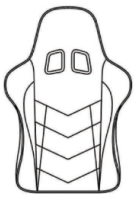

B1 Seat



B2 Angle adjuster



B3 Connector



B4 Plastic cover left hand side

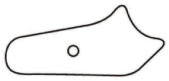

B5 Plastic cover right hand side

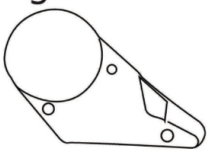

C1 Base

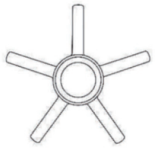

C2 Foot



X 5

D Control unit ×1

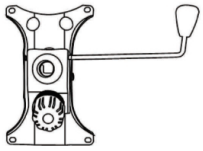

E M8 Allen Key



F Gas lift

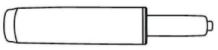

G M8*20

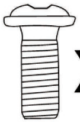

X 16

H M5*8



X 6

I Casters



X 5

J Plastic cover right hand side



K Plastic cover left hand side



L1 Left armrest



L2 Right armrest



M Plastic cover



N Headrest cushion

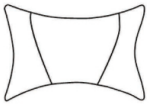

O Lumbar cushion

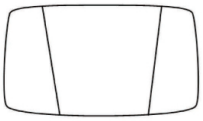

P M6*20

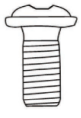

X 10

Q M6 Allen Key



Installation step

1. Assemble five-star foot and attach wheels

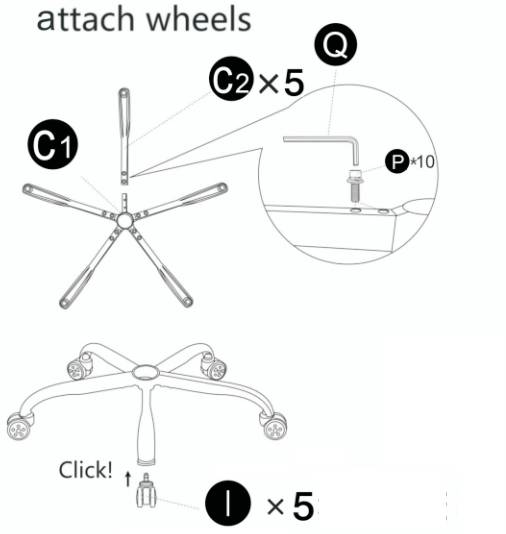

2. Install the gas lift and plastic cover

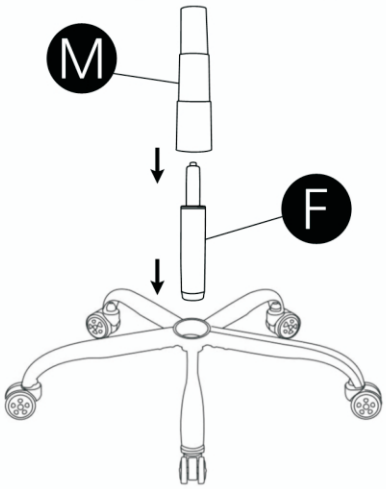

3. Fix the armrests to the base of the seat

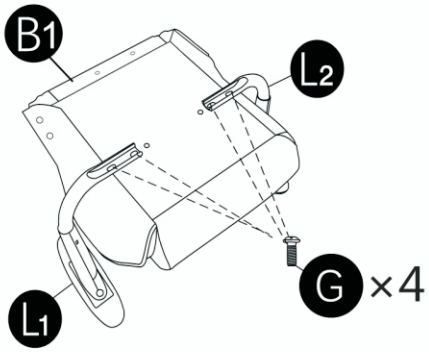

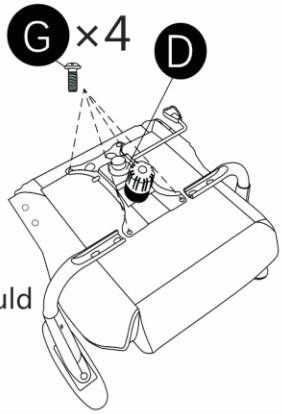

(Please note the direction of the control unit should be on the right)

4. Fix the control unit to the base of the seat

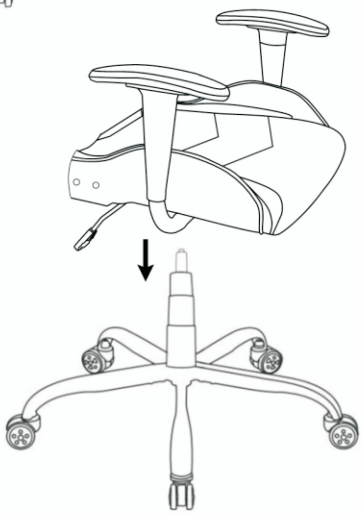

5.Insert the gas lift into the control unit

6.Fix the angle adjuster(B2) onto the side of the seat

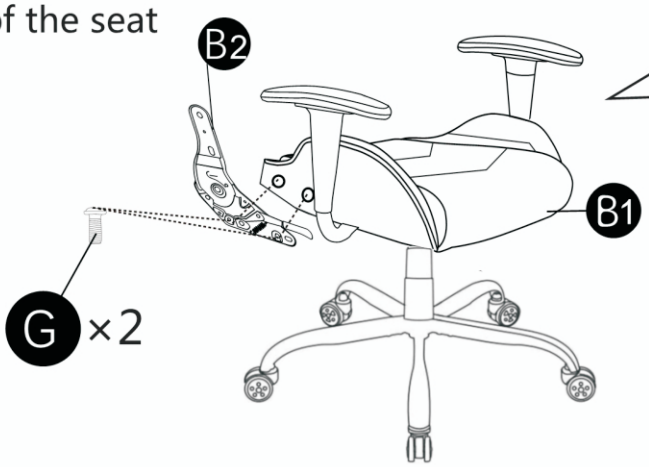

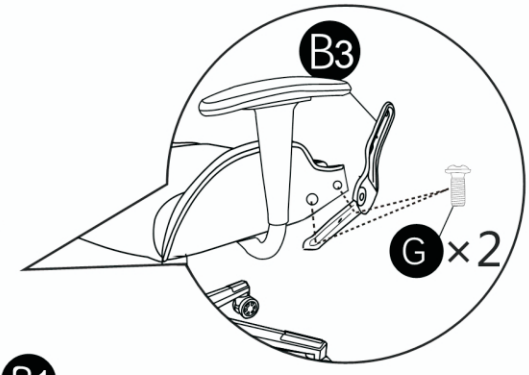

7.Left Side

Installation step

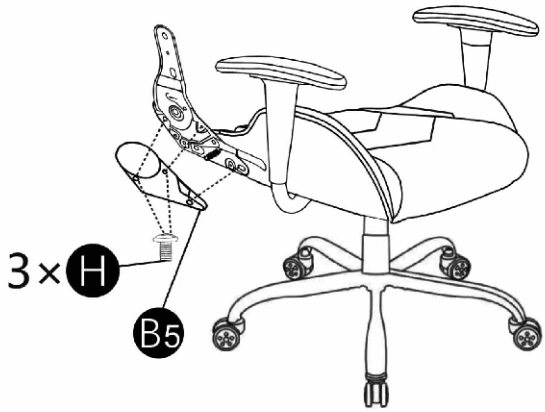

8. Fix the plastic cover(B5)
onto the side of backrest

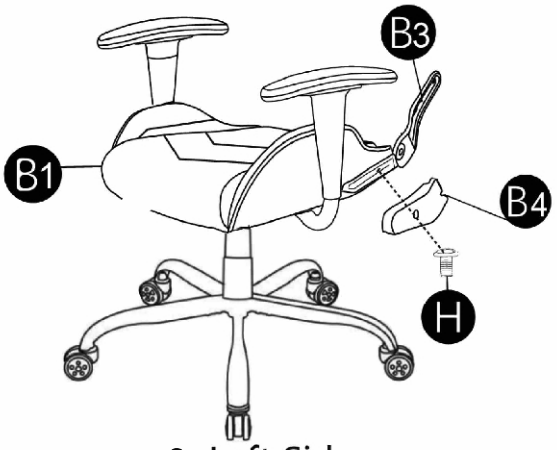

9. Left Side

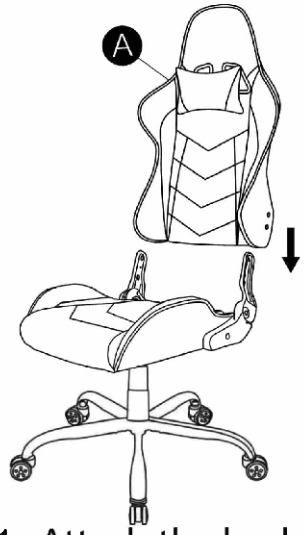

1 .Attach the backrest
to the seat

10. Use the Allen key to
make the screws align
in the holes correctly
and screw them in tightly.

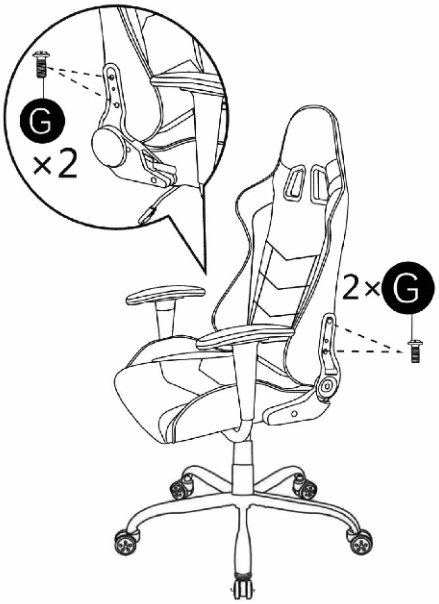

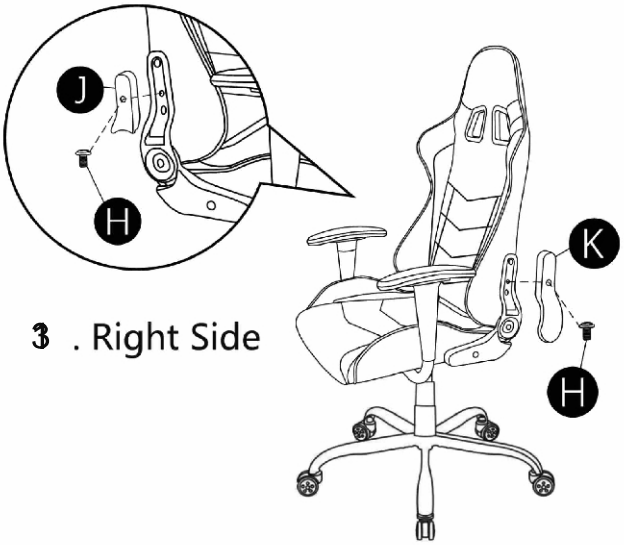

13. Right Side

12. Fix the plastic cover(K)
onto the side of backrest

Function



Load capacity up to 330lb

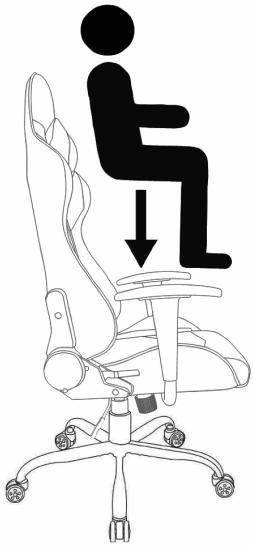

1 Please sit in the center of the chair when adjust the height Wrong posture is unable to up or down

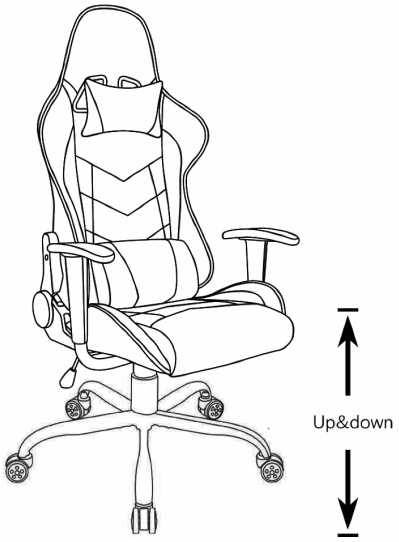

2 Seat Height adjustment (Adjusting knob on the right)

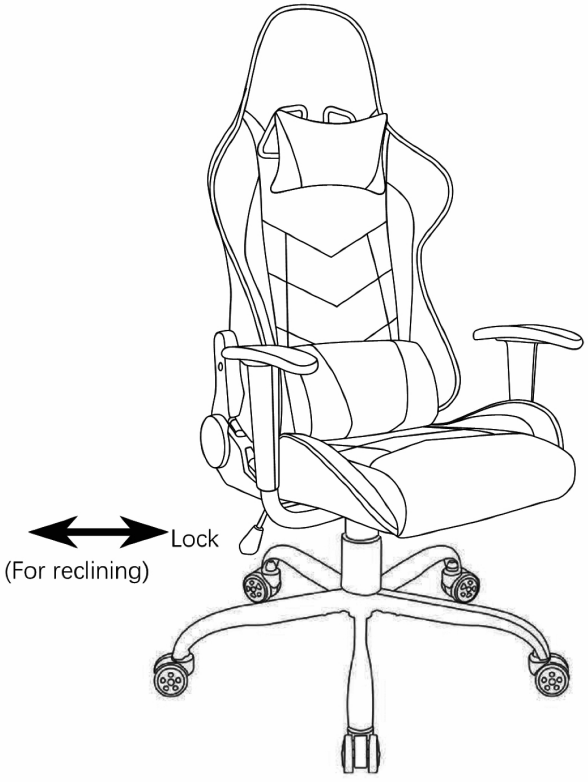

3 Rocking: Pull out the handle to start rocking. Insert to stop rocking



4 360 degree swivel

Rocking function

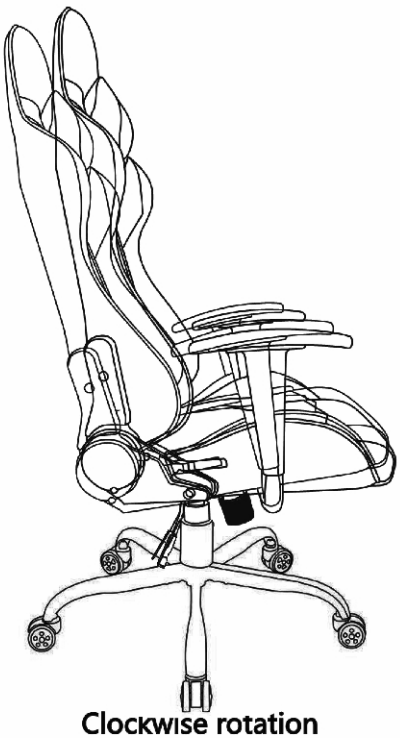

Clockwise rotation
Rocking angle 0-10°

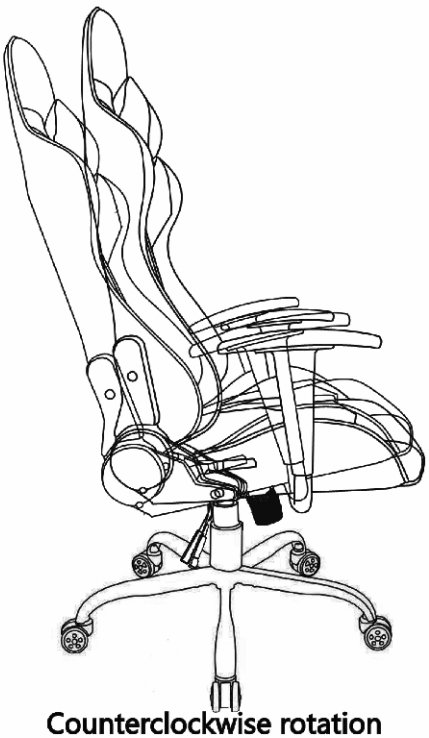

Counterclockwise rotation
Rocking angle 10-30°

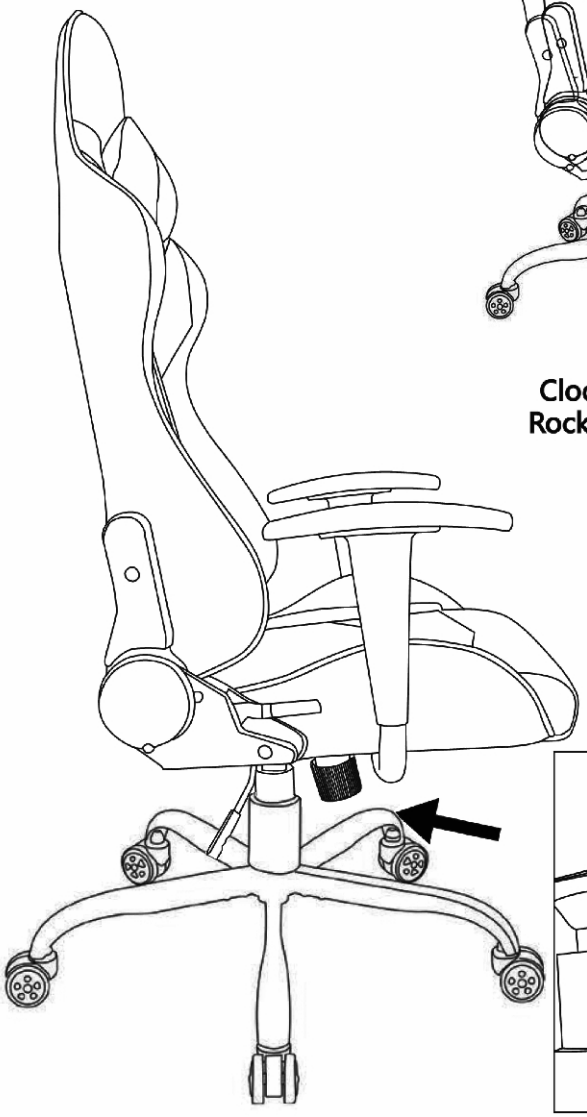

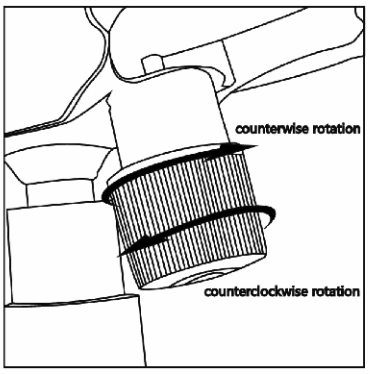

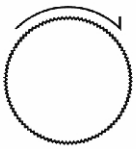

Clockwise rotation
Rocking angle 0-10°

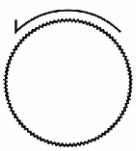

Counterclockwise rotation
Rocking angle 10-30°

Installation step

Attach headrest cushion
Method One

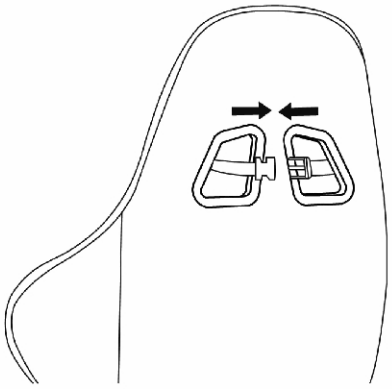

Insert the elastic through the plastic hole Tighten the elastic

Attach headrest cushion
Method Two

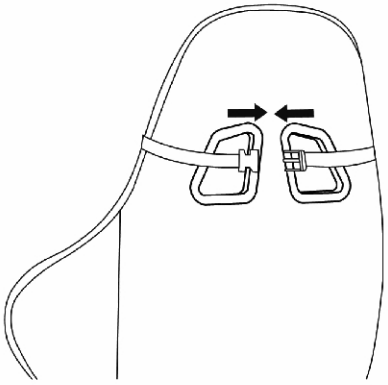

Put headrest cushion on the backrest

Instruction during use

1.Please move the product gently to avoid collision;

2.Please keep out of direct sunlight;

3.Please ensure the centre of gravity is on the hydraulic until during use;

4.Please watch your fingers when you adjusting the backrest angle;

5.Please toggle the handle under your seat when adjusting the chair height. do not to press it down roughly;

6.Please lift the lever gently to raise or lower the height of the chair. Do not pull it roughly;

7.Do not place any heavy objects on the chair or armrest;

8.Plastic parts will split if chair is exposed to direct sunlight;

9.Please do not use abrasive cleaners on the chairs;

Q&A

It is advised that the users check the screws and tighten them up every 6 months, for any parts missing or defective, kindly contact us and we will be glad to be helpful.



Q: How to assemble the chair seat and the chair back?
A: Put all the seat screws in position and do not tighten; put all the back screws in position and do not tighten; adjust the seat and back well and tighten all the screws.

Q: How to assemble the seat base and seat?
A: Find the mark "Front"
Find the base side with mark " Front" , put all the base screws in potion and tight them a little, adjust the seat and seat base well, tighten all the screws.

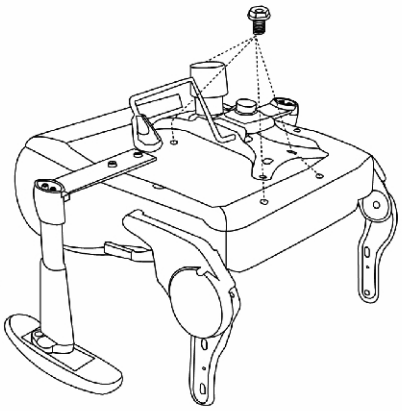

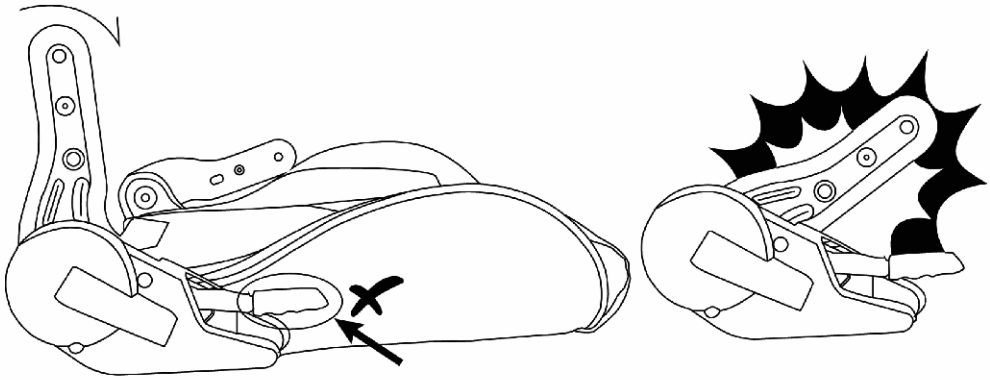

Warning!
Keep the chair out of reach of the children!
To avoid personal damage, do not pull the handle during assembly.