Owner Manual

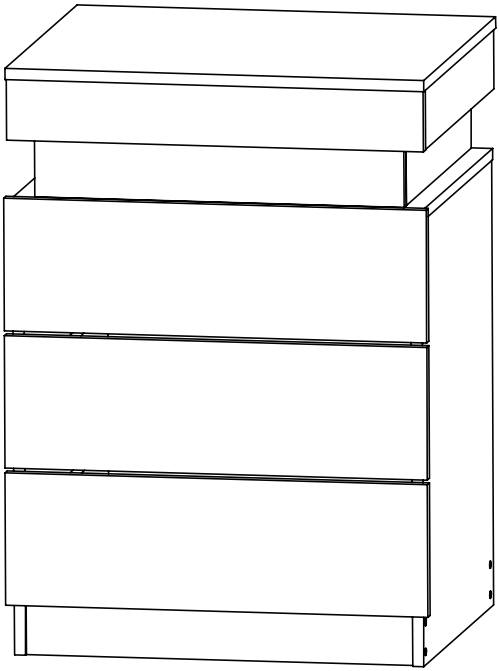

IMPORTANT INFORMATION
READ CAREFULLY.
KEEP THIS INFORMATION FOR FURTHER REFERENCE.

GENERAL GUIDELINES

Please read the following instruction carefully and use the product accordingly.
Please keep this manual and hand it over when you transfer the product.
This summary may not include every detail of all variations and considered steps.
Please contact us when further information and help are needed.



NOTES

Please follow the assembly instructions precisely and only use the product as intended.

If an odor is present when first opening the package, please leave the unwrapped product in a shaded and ventilated area for a few days to air out.Please follow the assembly instructions precisely and only use the product as intended.

Prior to assembly, please check the product for defects or missing accessories. If any defects are found or accessories are missing, do not use product as damage or injury may occur;
Please contact us for assistance and replacement.

It is suggested you regularly check the products bolts and connections to ensure safe use.

Assemble the item on a soft flat and clean surface to avoid scratches and damage.

It is recommended that two people assemble this product.During assembly, please only slightly tighten all screws in their correct position first, then fully tighten them. A Philips screwdriver is recommended but not included.

WARNINGS

During assembly, keep parts and packaging materials away from children and pets as there could cause injury and are a potential choking hazard.

Avoid sharp objects or corrosive chemicals to prevent damage to the product.

Please open the item slowly and cautiously to avoid pinching your hands by metal joints, especially children.

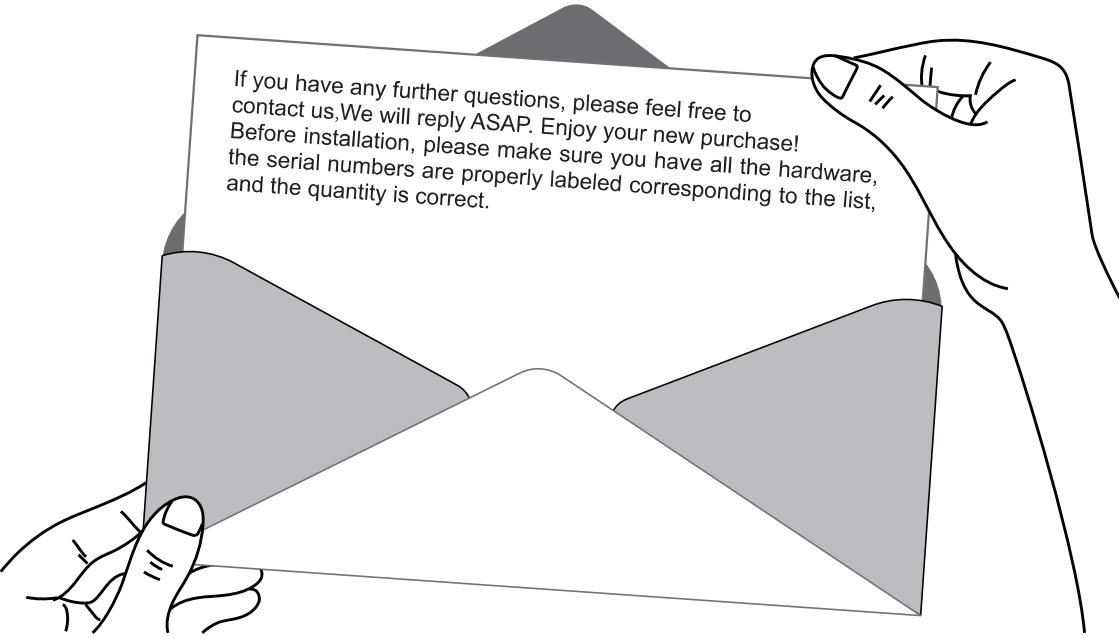

INSTRUCTIONS

❶

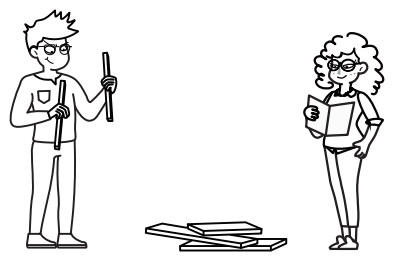

❷

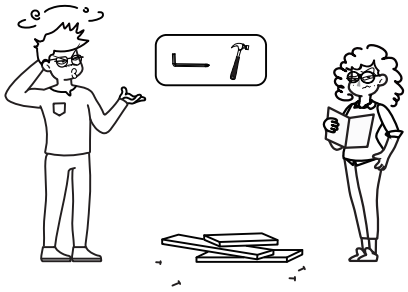

❸

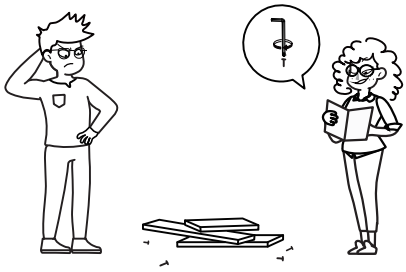

❹

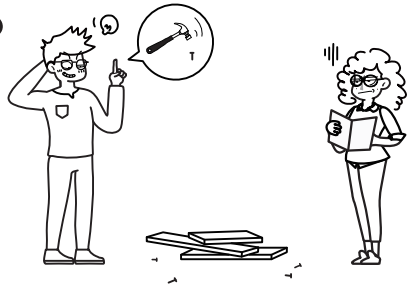

❺

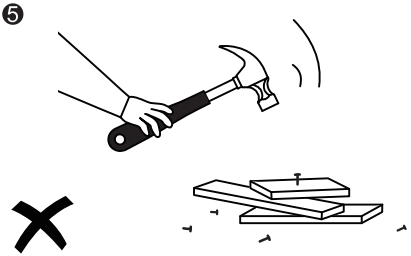



❻

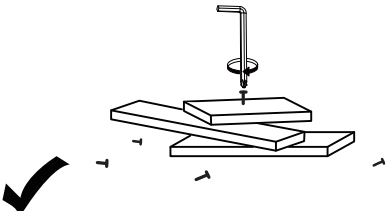



EXPLODED DRAWING

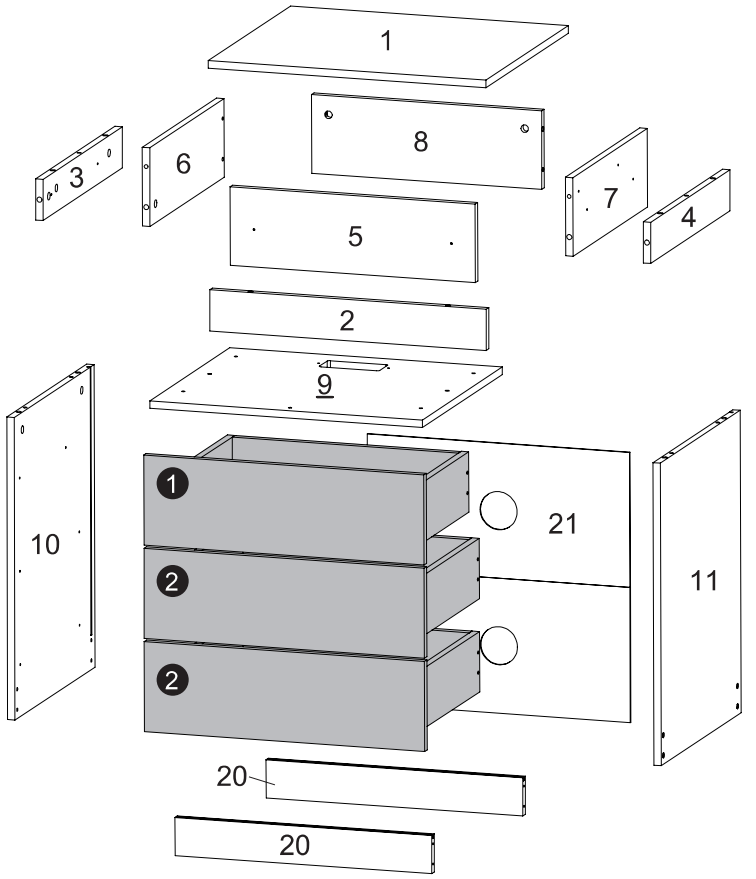

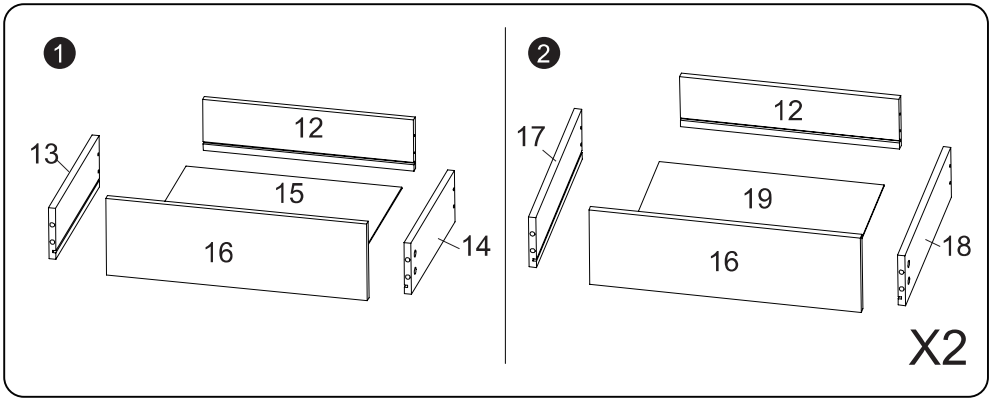

PARTS

A X28

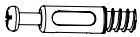

B X12

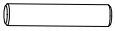

C X28



D X1
Short
300

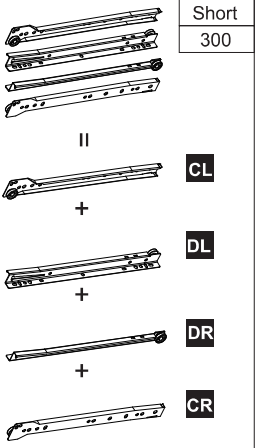

D X2
Long
350

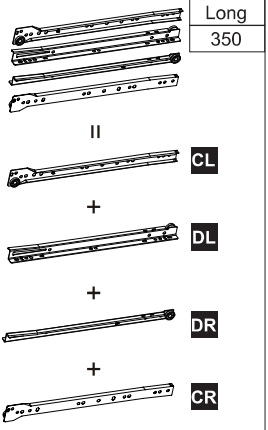

E X1

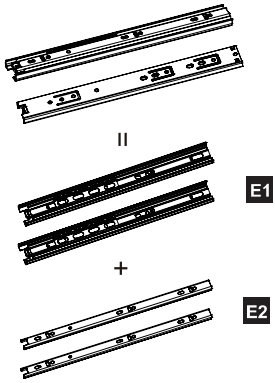

G X25
M4x40



H X34
M4x11



K X1



L X1



M X6



N X32



O X1

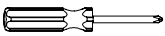

P X4



Q X4
M4x14



REMARK

MINIFIX POSITION

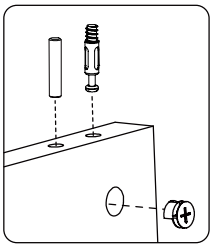

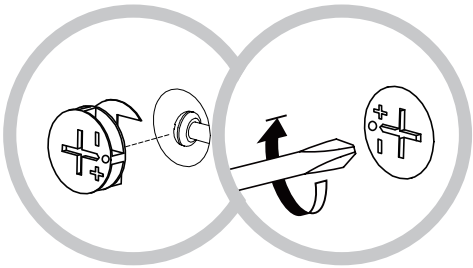

Step 1

Put a blanket under the product to avoid scratch or damage.

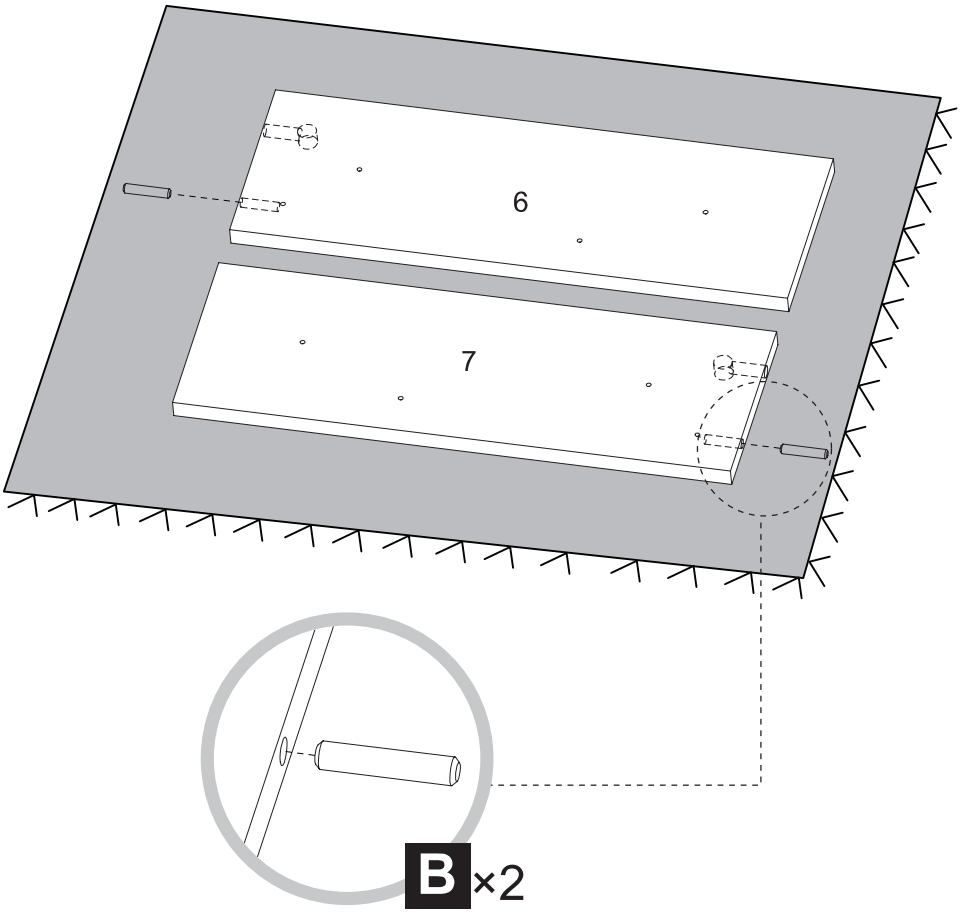

Step 2

1. Press the plastic part in the indicated direction to separate drawer runner **E1** and **E2** before assembling.

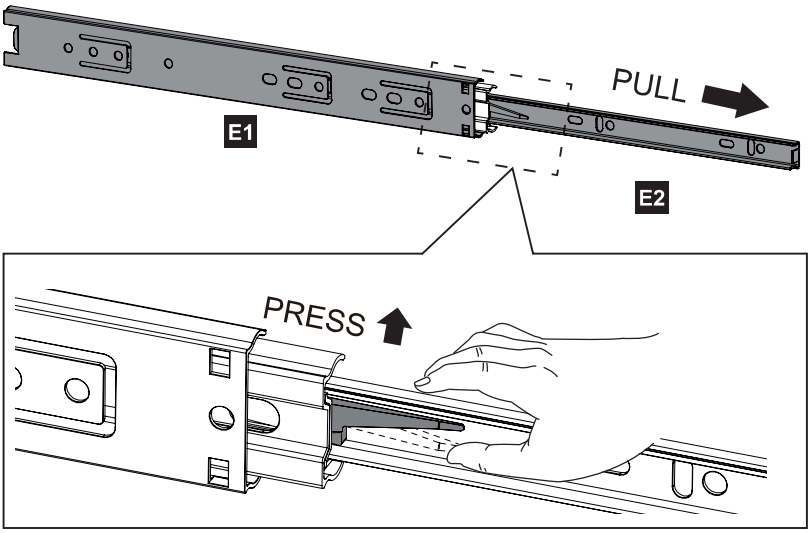

2. Please grip the **E1** part while sliding the **E2** part.

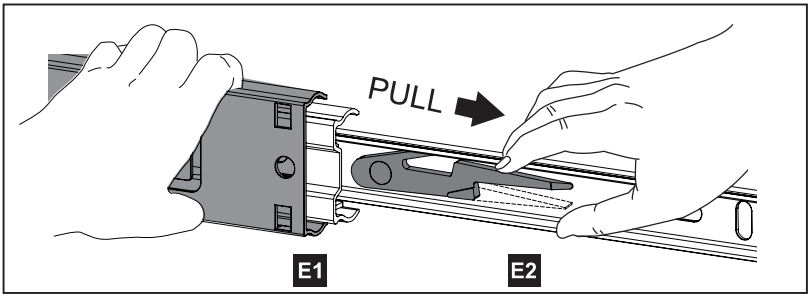

3. Accomplish.

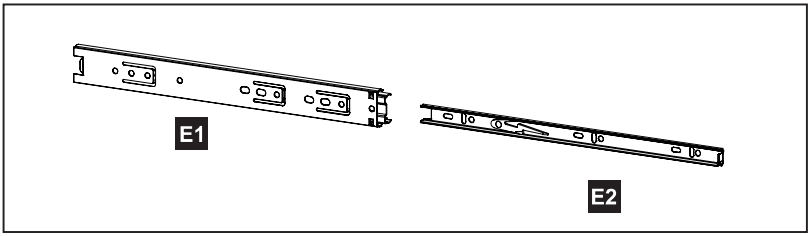

Step 3

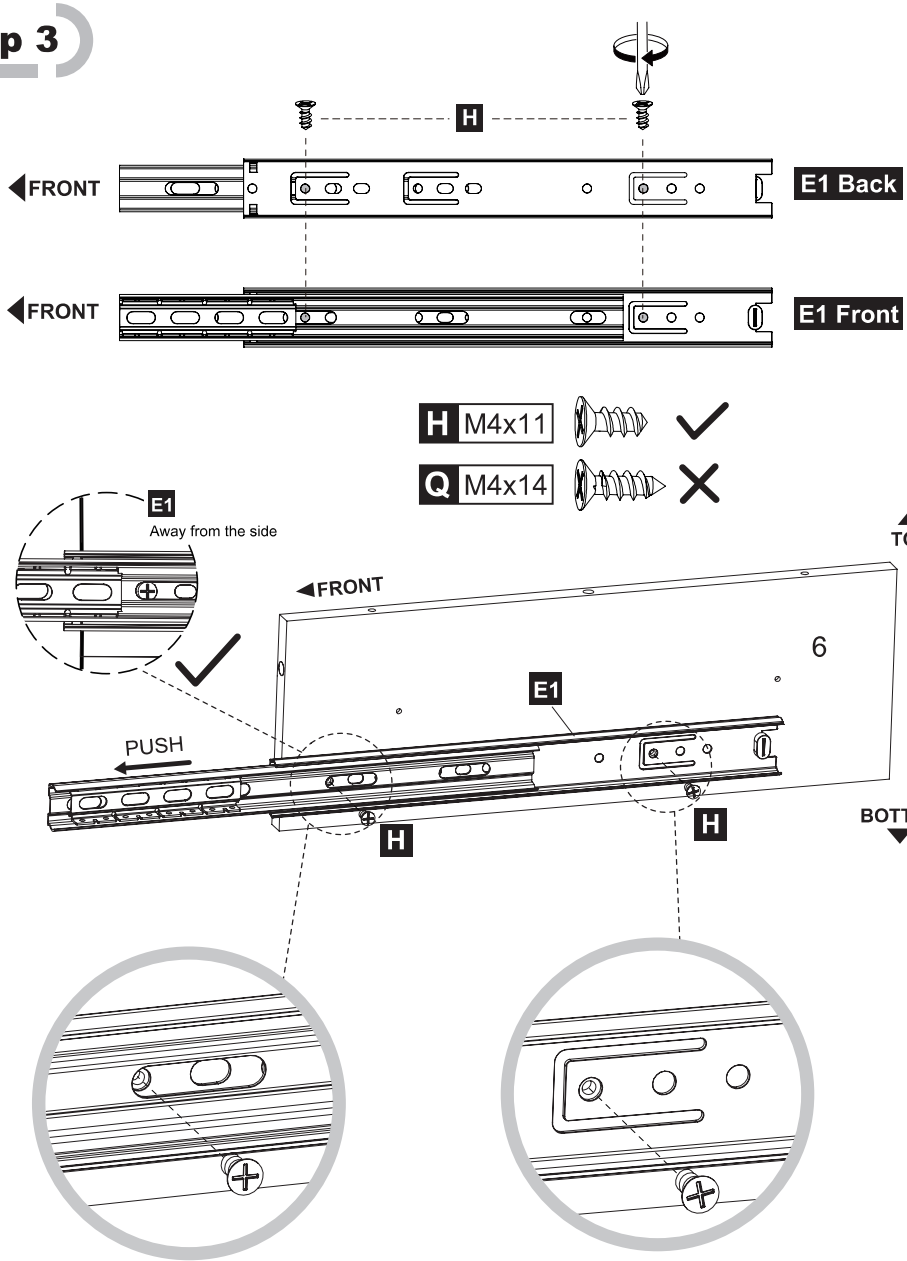
H
FRONT
E1 Back
FRONT
E1 Front
H M4x11
Q M4x14
E1
Away from the side
FRONT
TOP
6
E1
PUSH
H
H
BOTTOM

Step 4

1. When installing, please make sure the screws are flattened, not crooked; Otherwise the drawers will not be installed perfectly.
2. Then please install part **H** from the front of part **E1** .

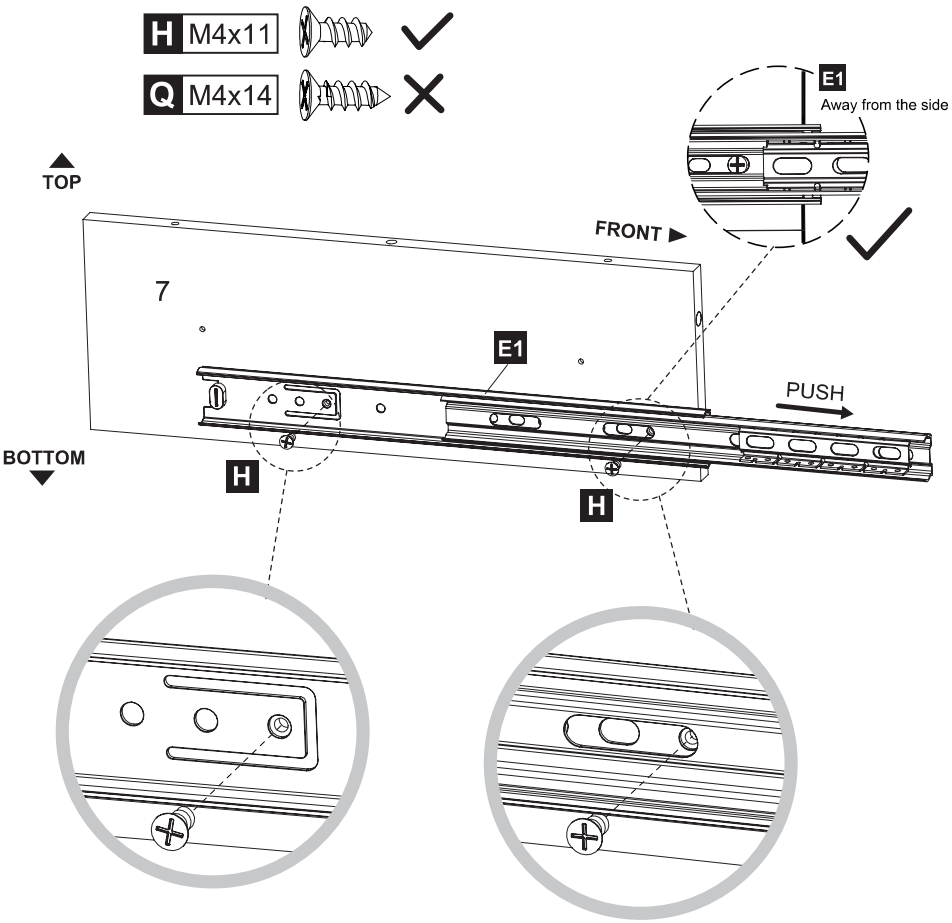

Step 5

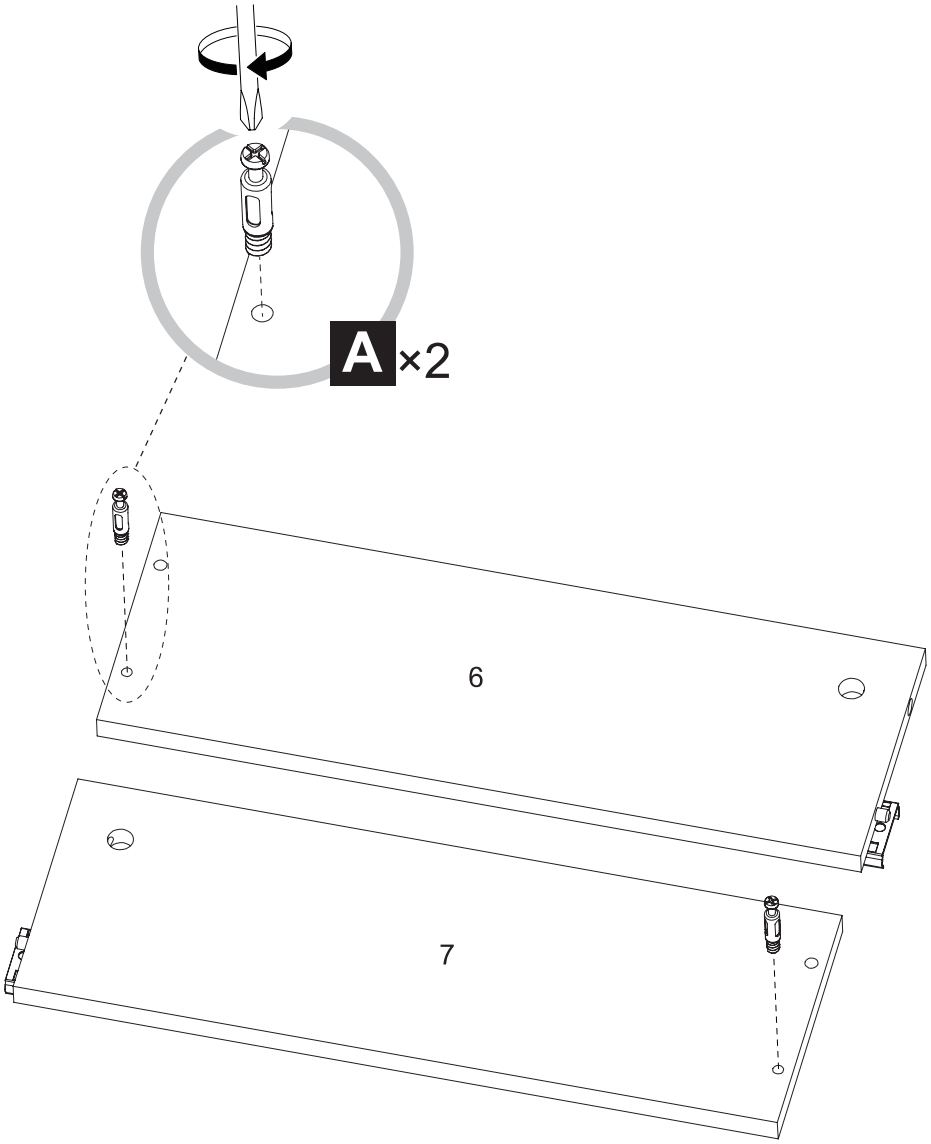

Step 6

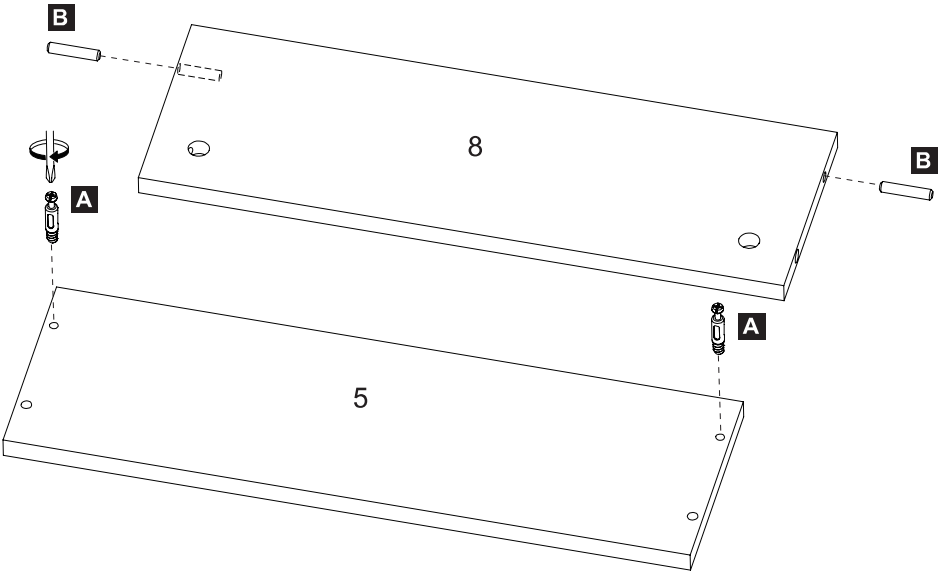

Step 7

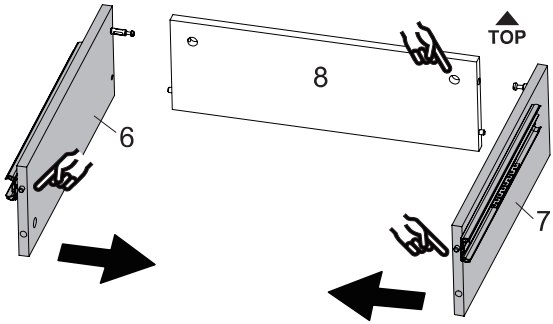

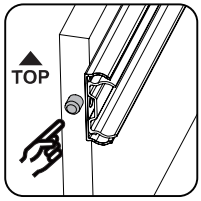

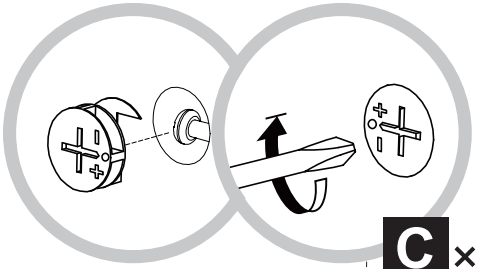

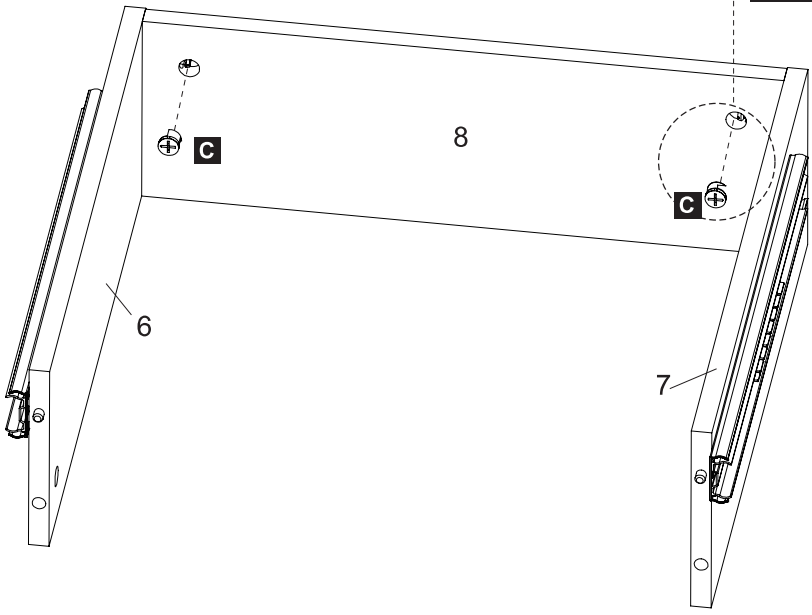

Step 8

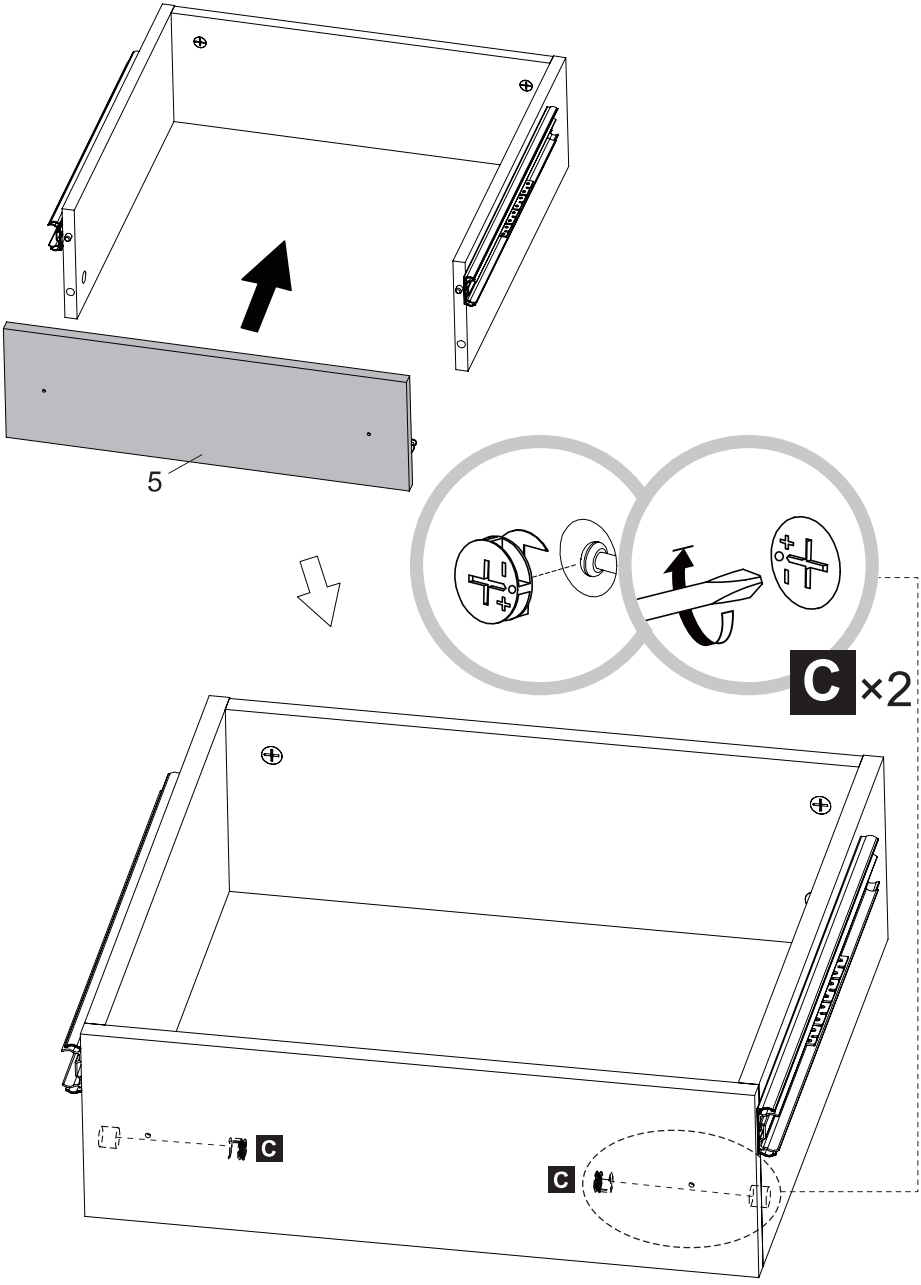

Step 9

1. When installing the LED strip, do not cover the upper holes. Keep it about 5 mm away from the hole edges.
2. Put a blanket under the product to avoid scratch or damage.
3. Please pay attention to the position of the type of plugs during installation.

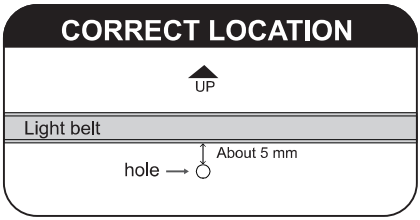

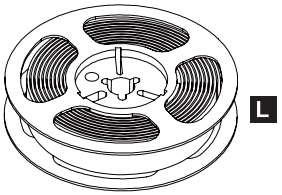

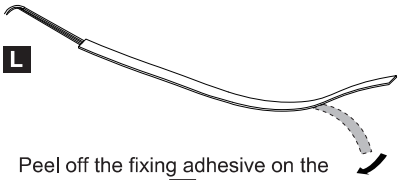

Peel off the fixing adhesive on the back of the part **L**.

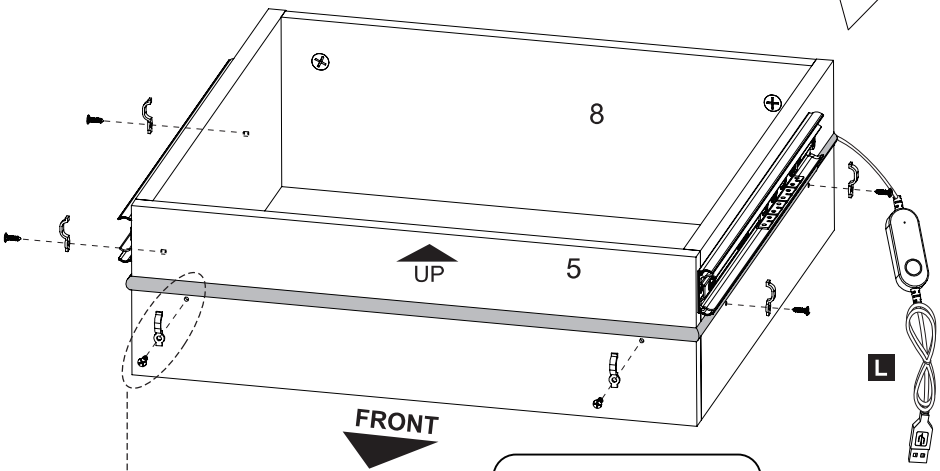

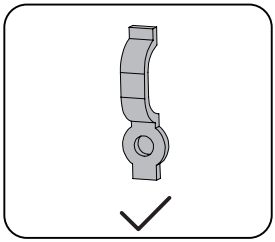

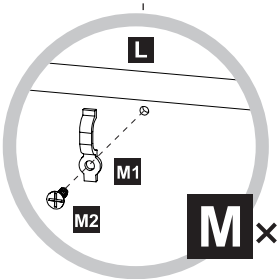

M×6

Install the fastener to prevent the light strip from falling off.

Step 10

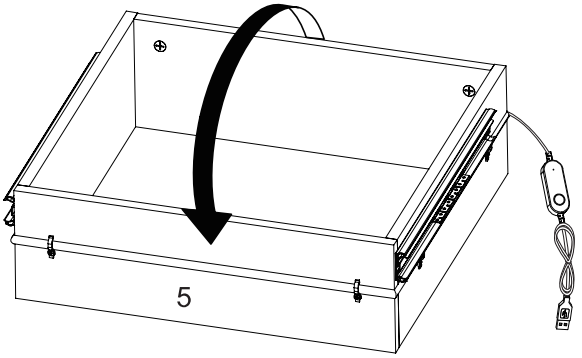

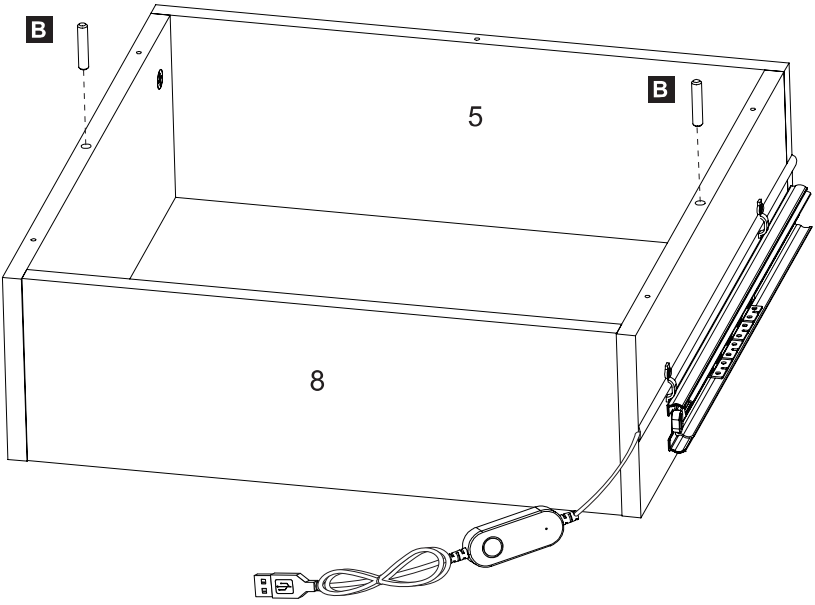

Step 11

Please fully tighten all the screws after they are in right place.

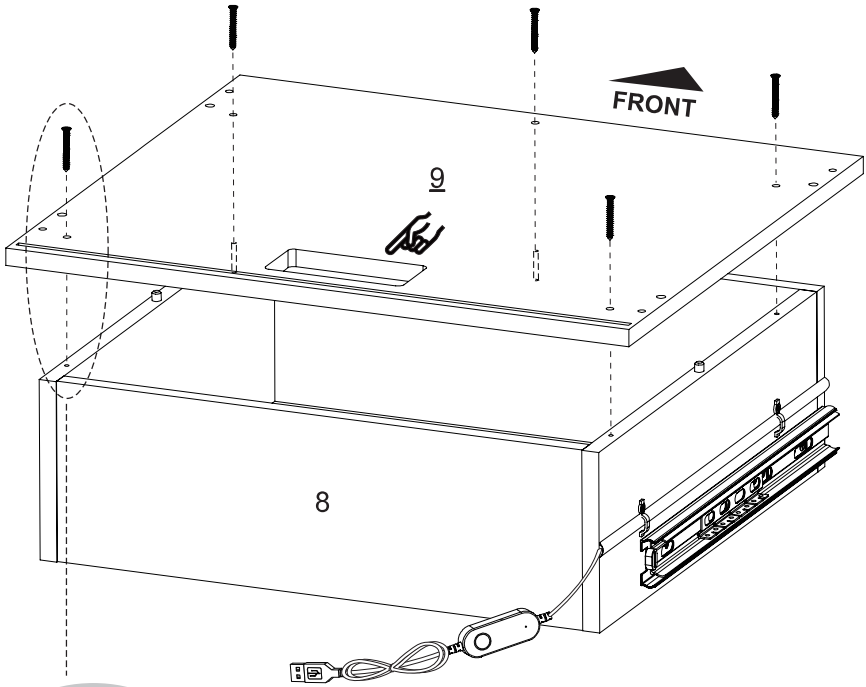

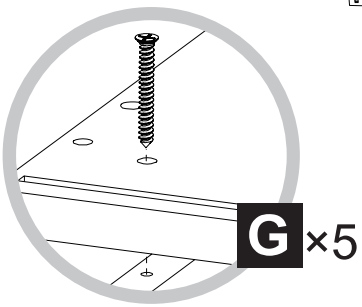

Step 12

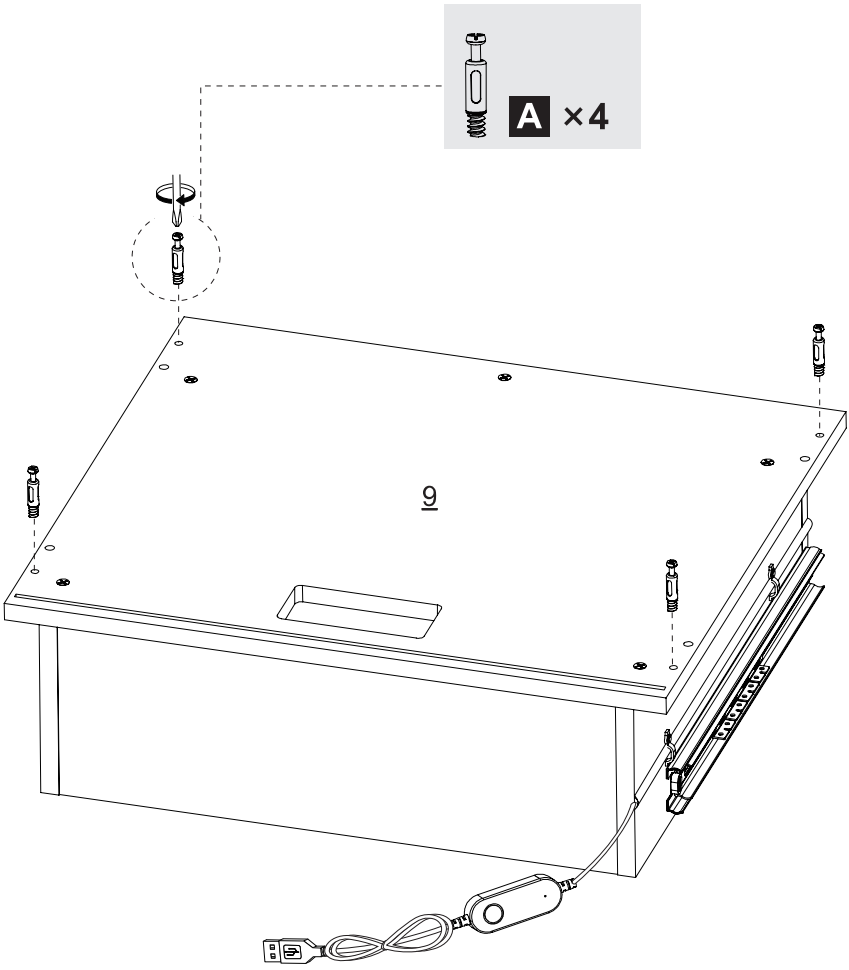

Step 13

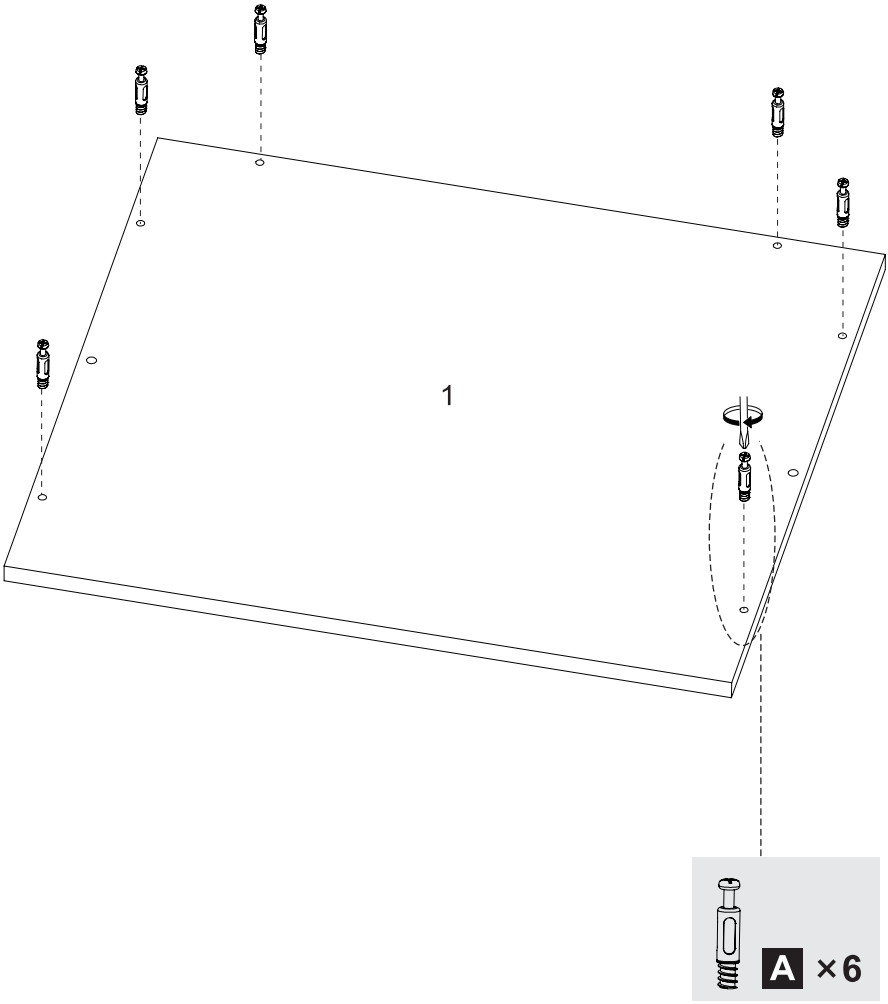

Step 14

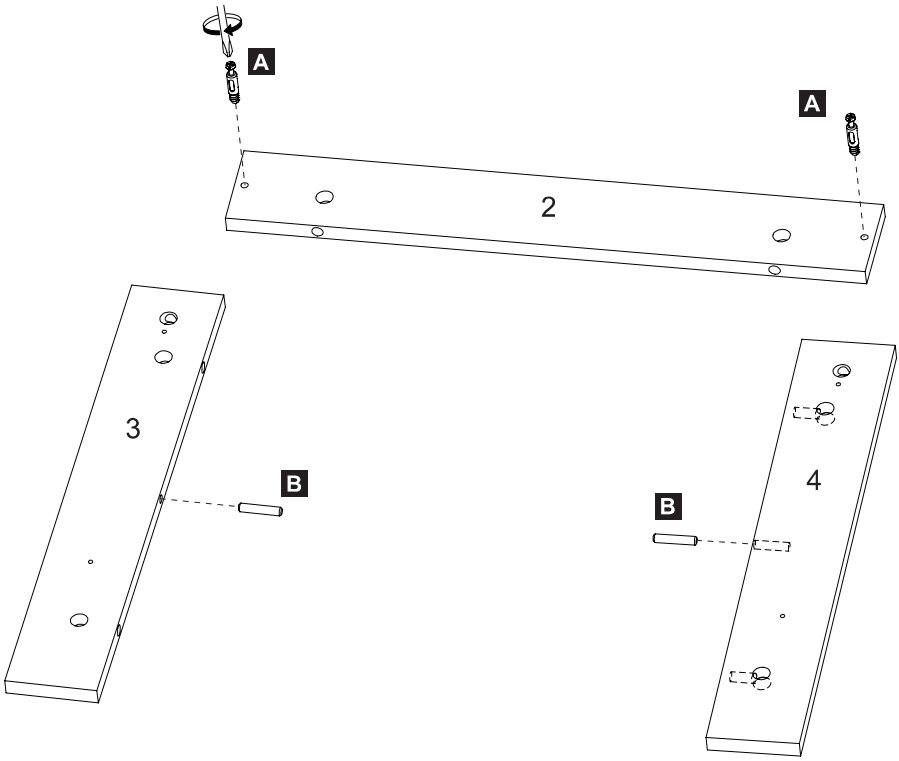

Step 15

Please note that the holes indicated by your fingers should face in the same direction.

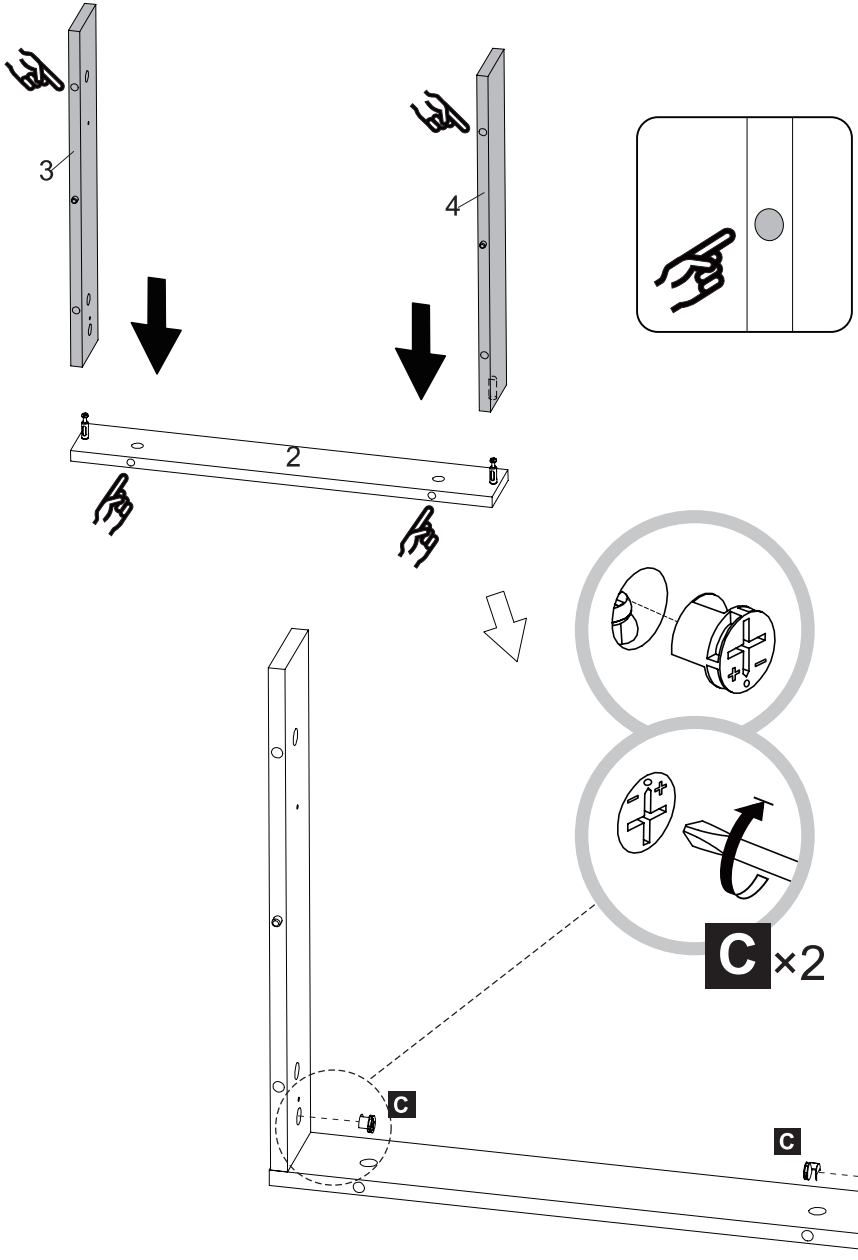

Step 16

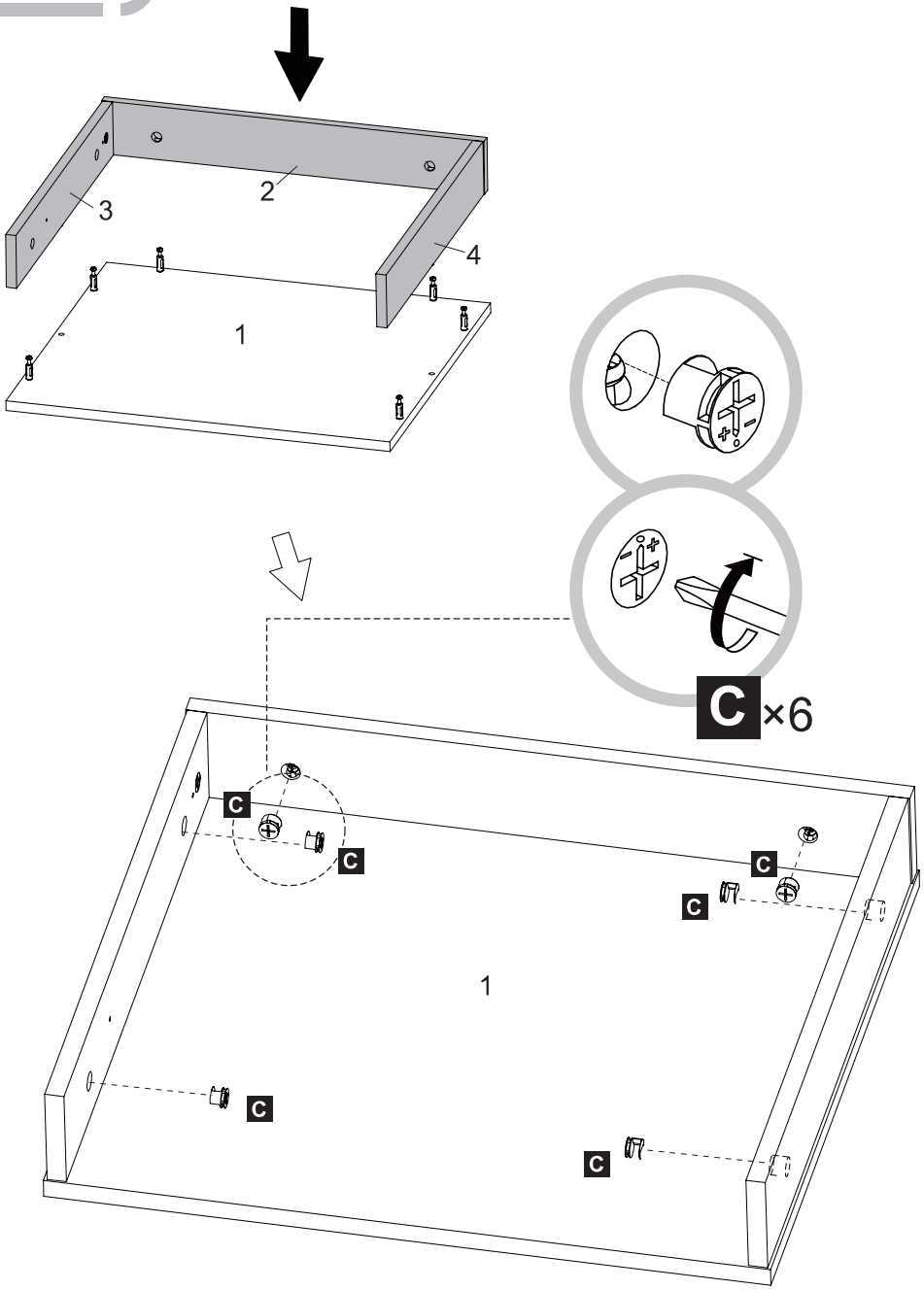

Step 17

When installing, please make sure the screws are flattened, not crooked; Otherwise the drawers will not be installed perfectly.

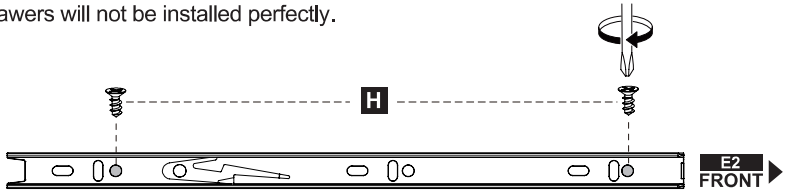

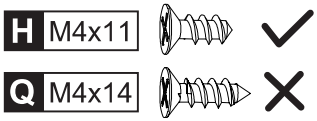

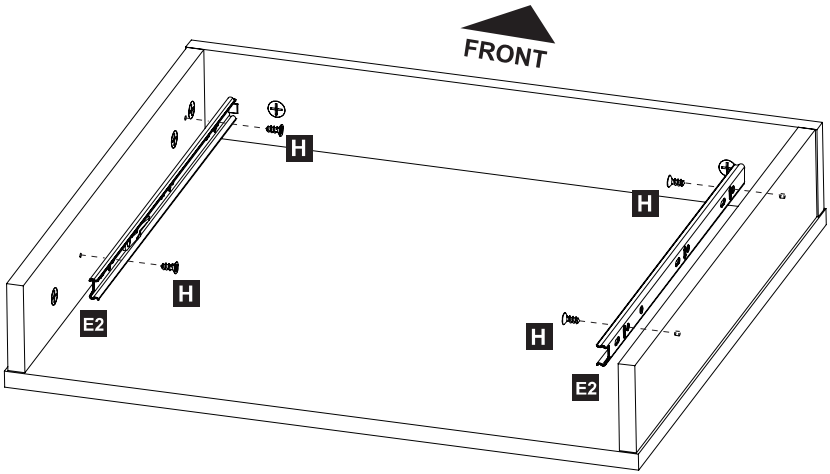

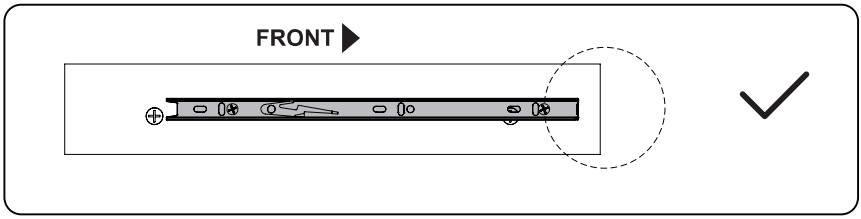

Step 18

1. Please full extend the slide runners.
2. Simply push the ball bearing cart all the way to the end of the slide(in both sides).

❶

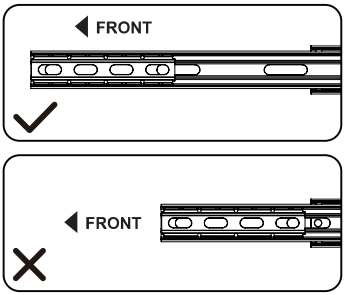

❷

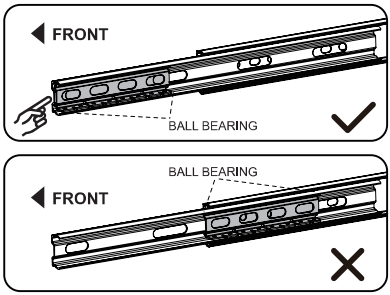

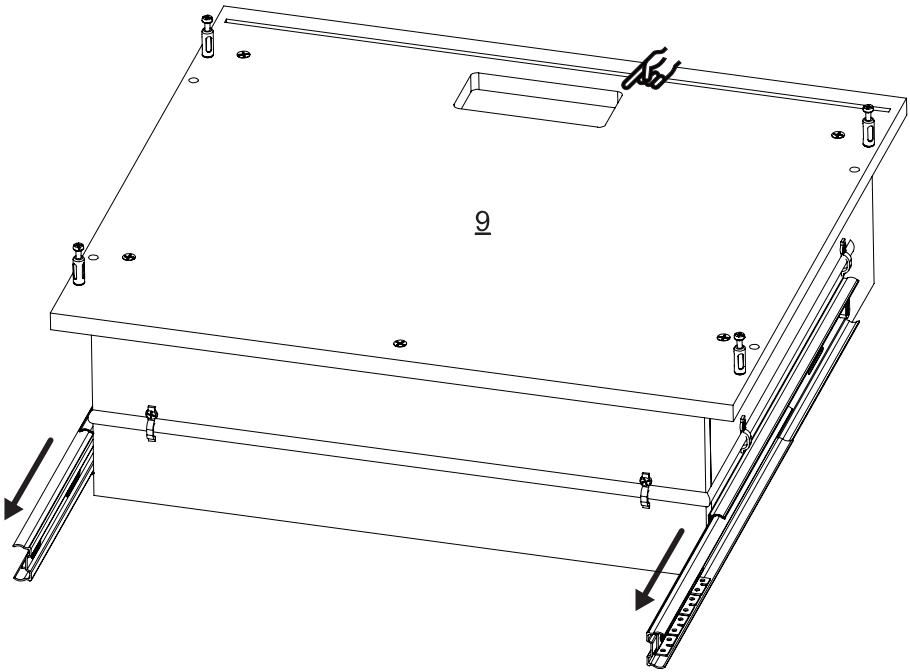

Step 19

1. This step requires two people.
2. Align the slide runners on the drawer with the unit and push it carefully inside until it stops.
3. If the drawer does not go in smoothly please take it out and repeat the step.

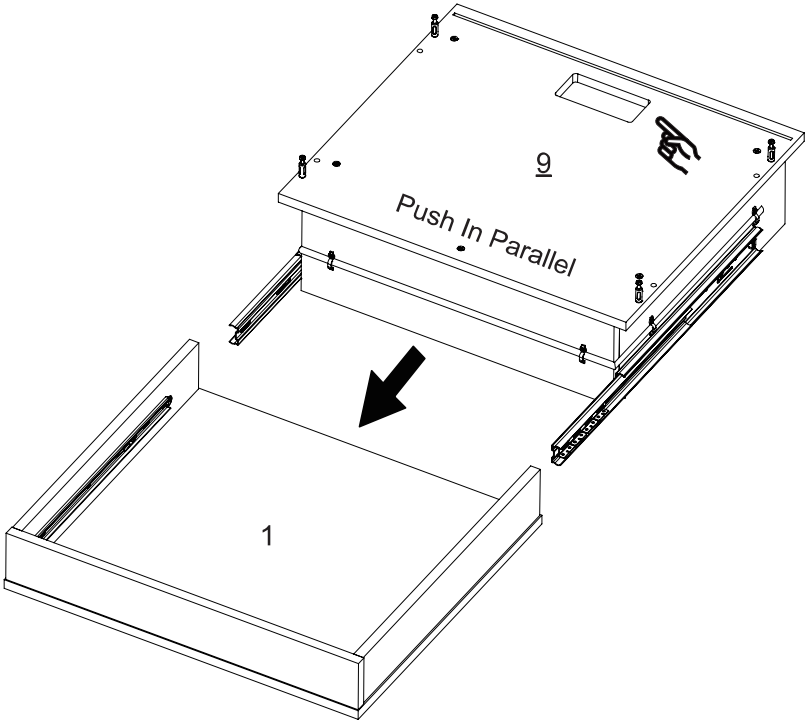

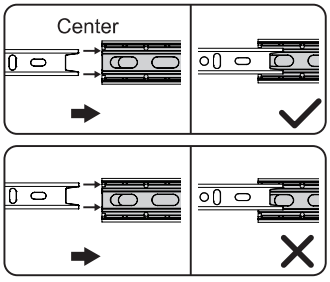

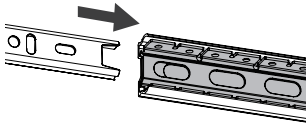

Step 20

When installing, please make sure the screws are flattened, not crooked; Otherwise the drawers will not be installed perfectly.

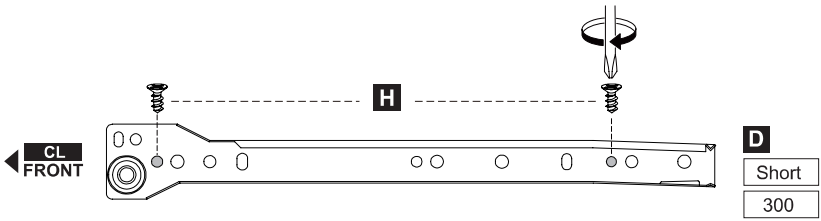

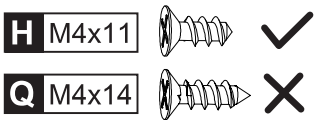

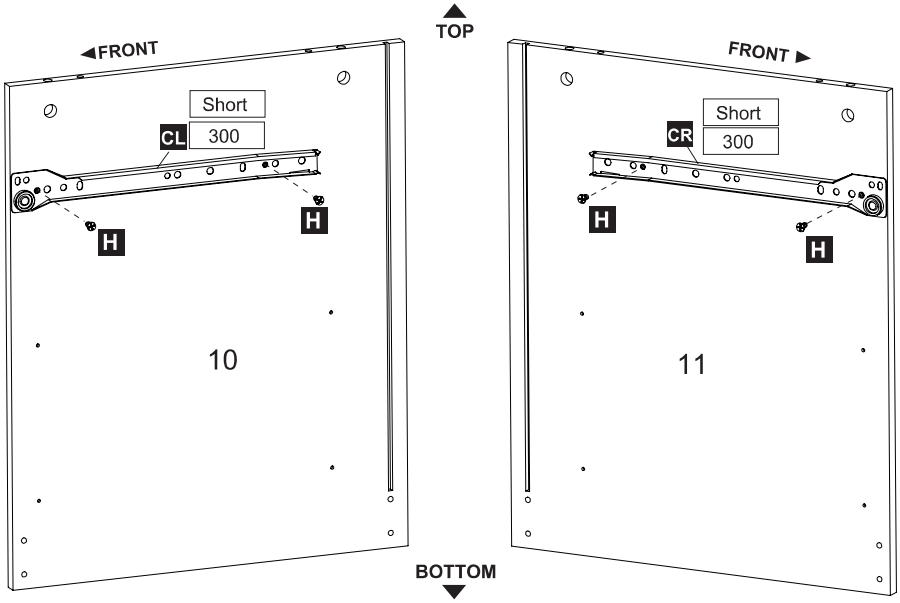

Step 21

When installing, please make sure the screws are flattened, not crooked; Otherwise the drawers will not be installed perfectly.

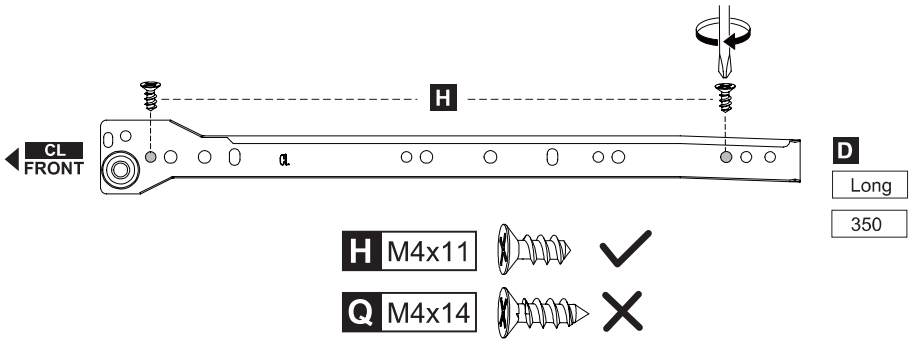

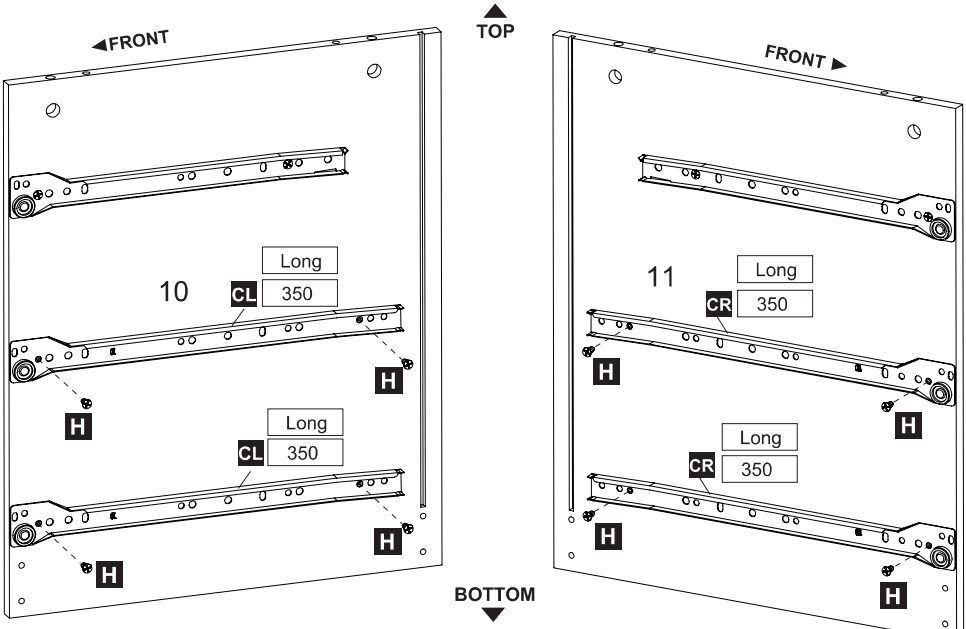

Step 22

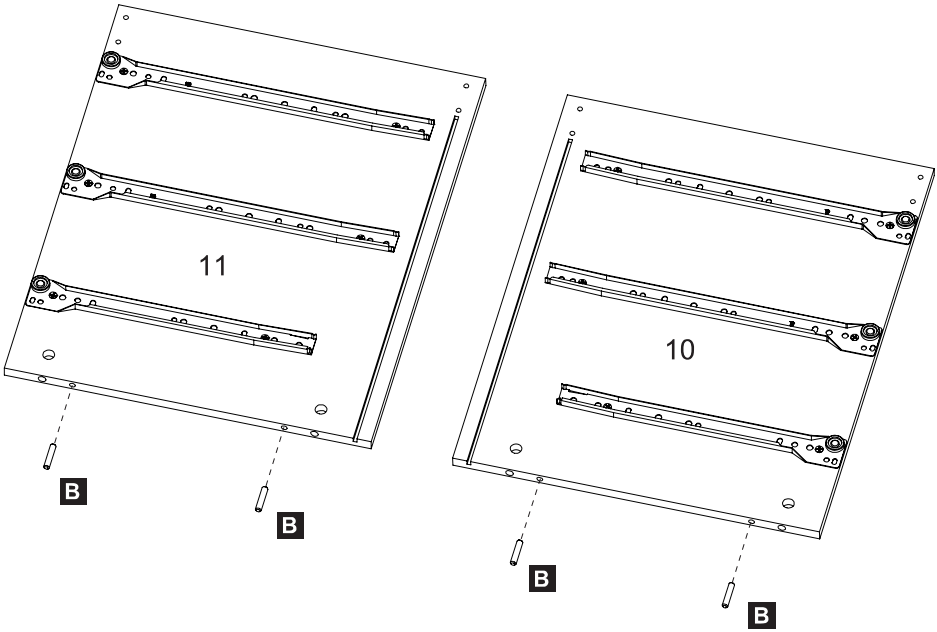

Step 23

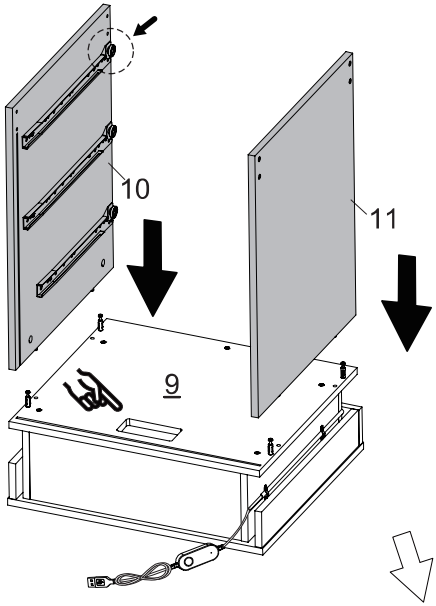

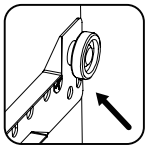



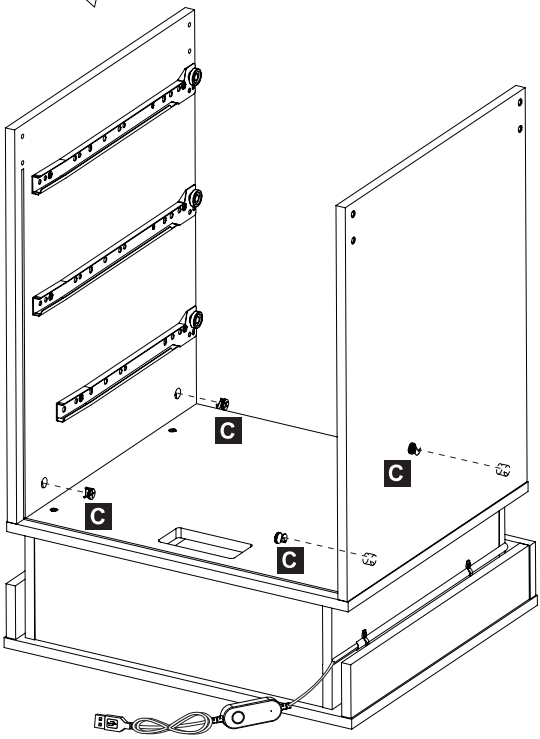

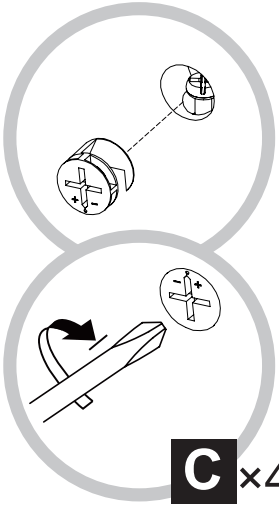

Step 24

Please fully tighten all the screws after they are in right place.

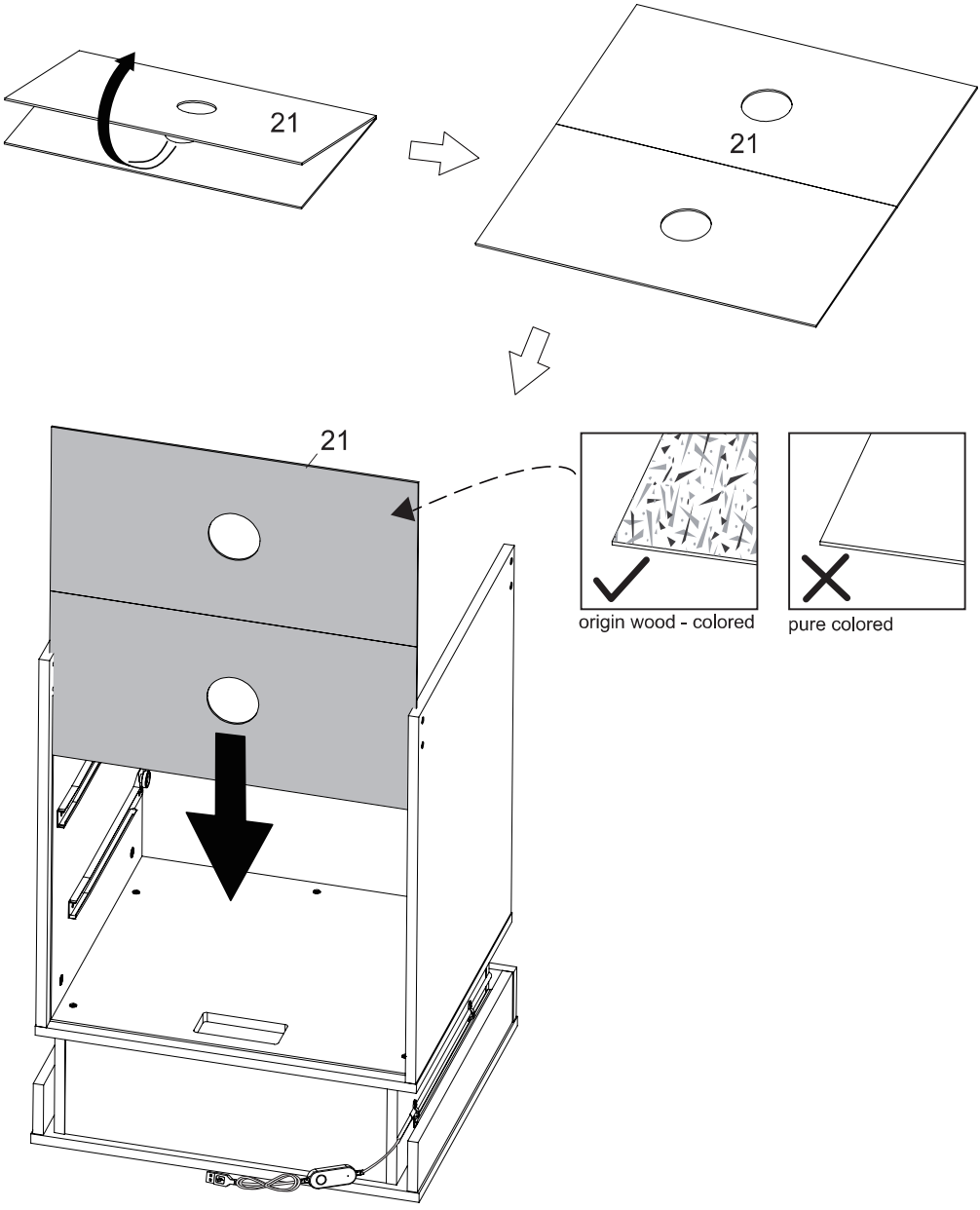

Step 25

Please fully tighten all the screws after they are in right place.

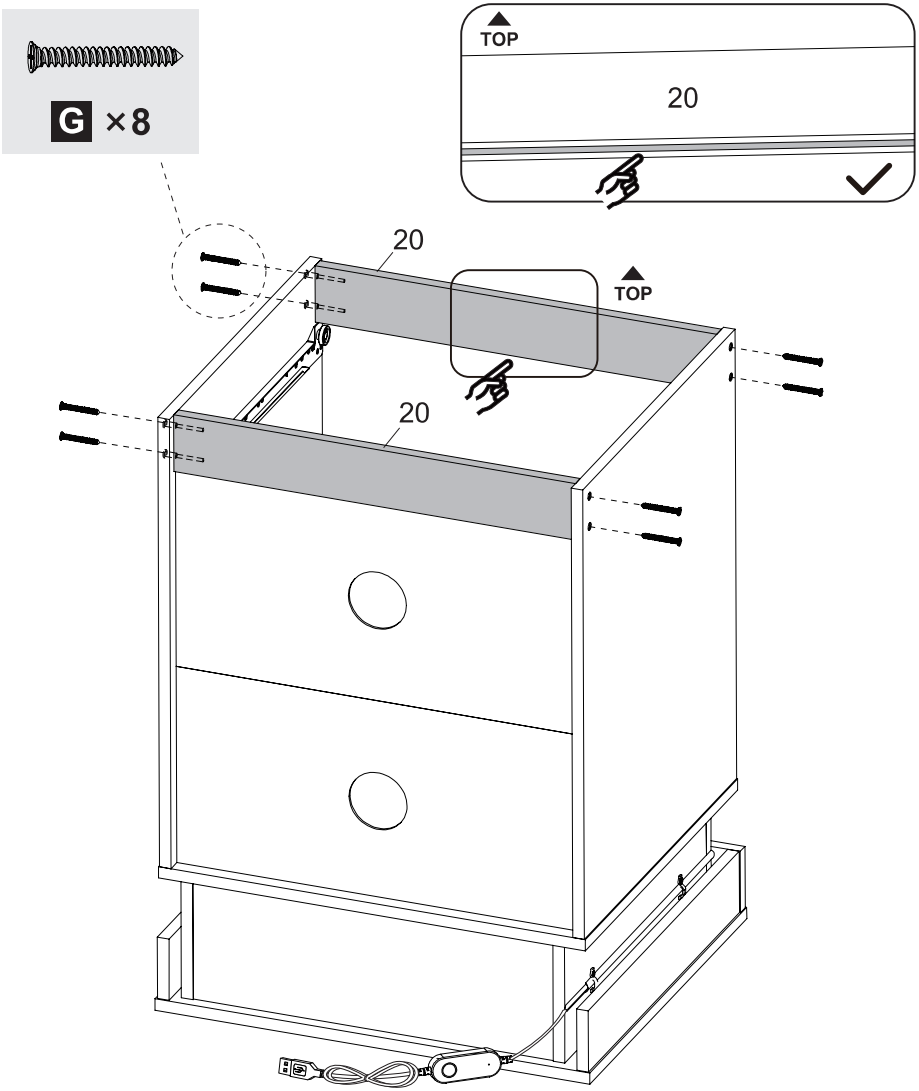

Step 26

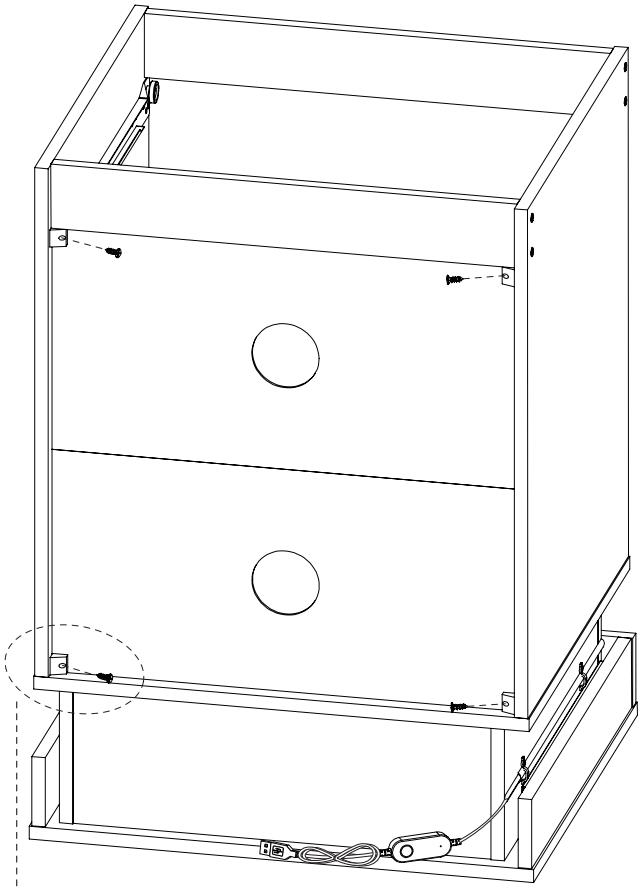

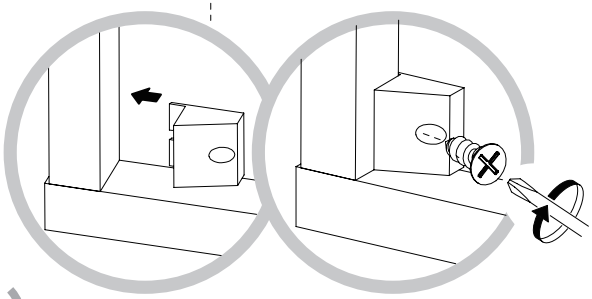

Q M4x14 ✓

H M4x11 ✗

P + Q ×4

Please fully tighten all the screws after they are in right place.

Step 27

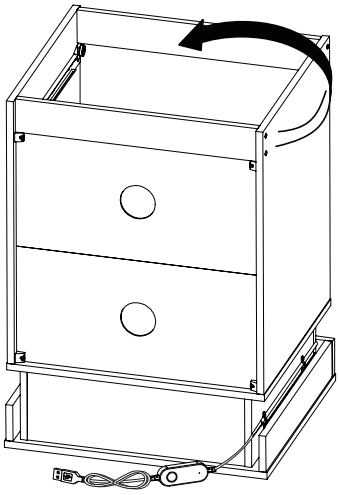

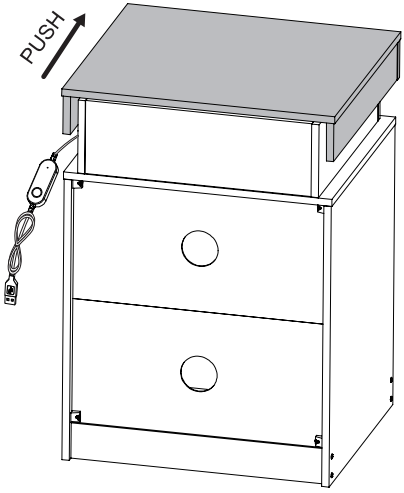

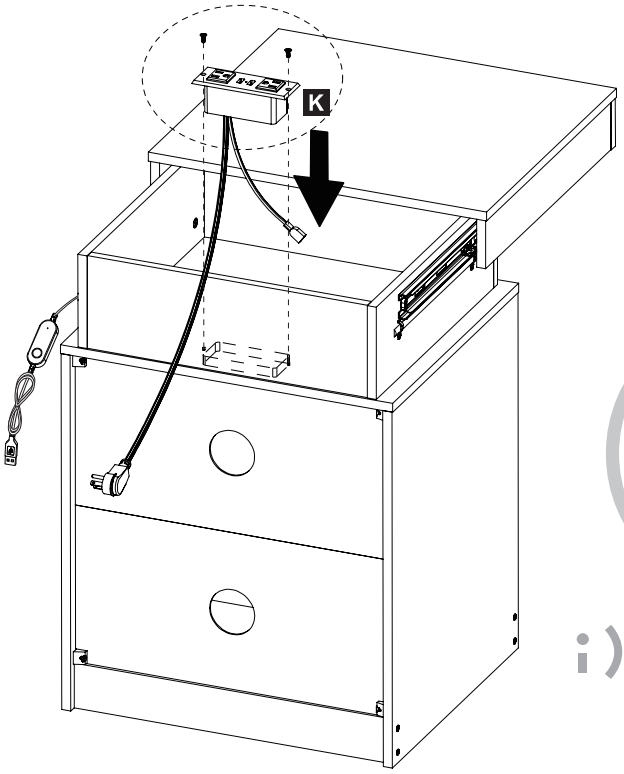

H M4x11

Q M4x14

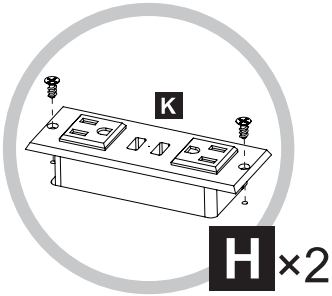

Please fully tighten all the screws after they are in right place.

Step 28

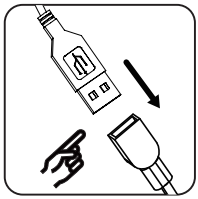

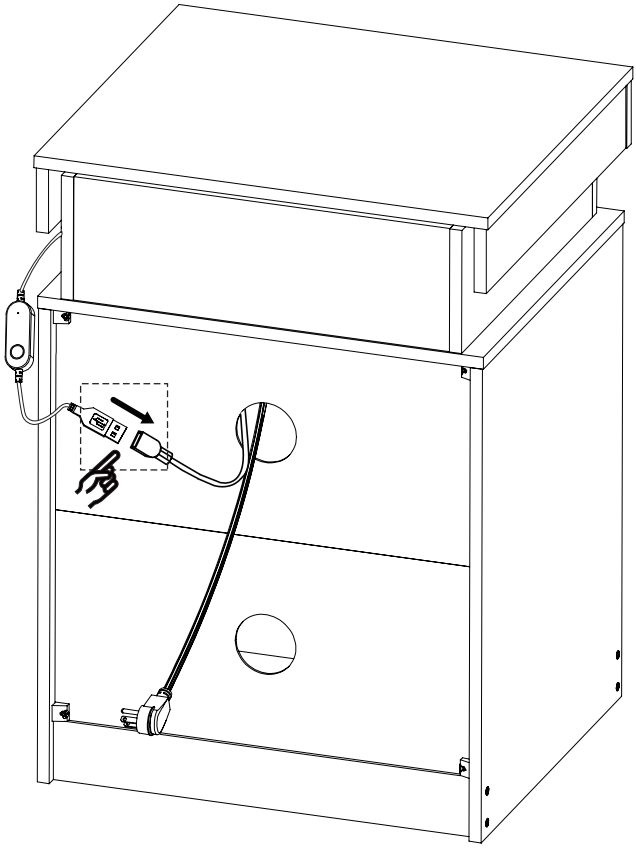

Step 29

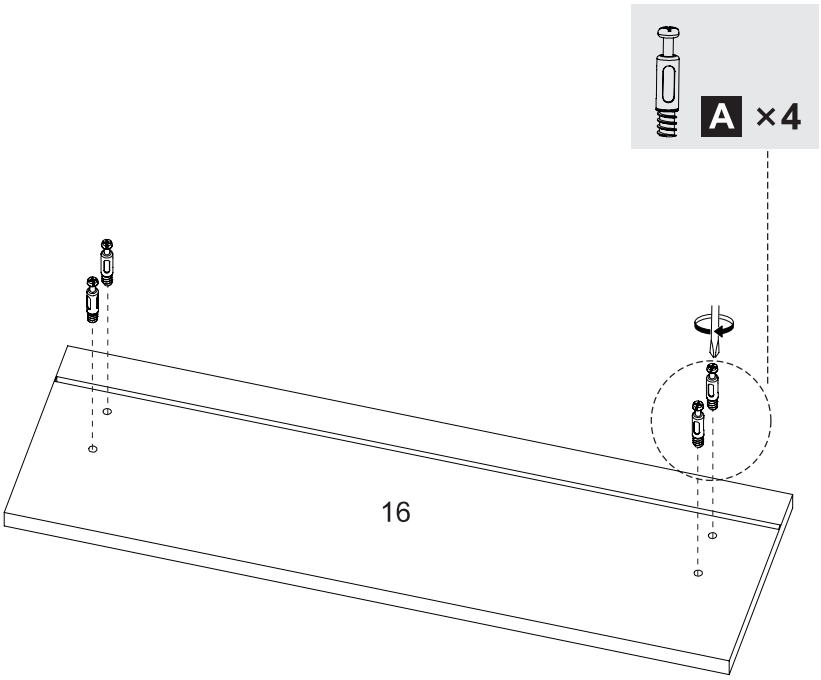

×3

Step 30

Let the grooves on part **13** and **14** be connected to the groove on part **16** .

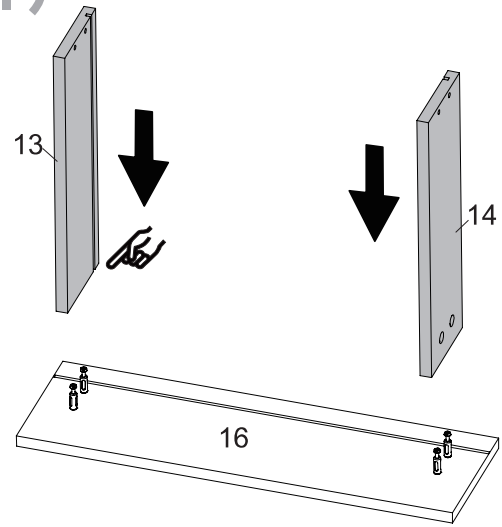

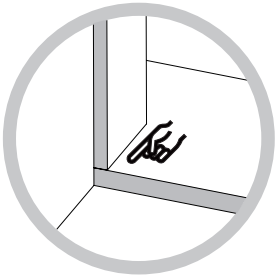

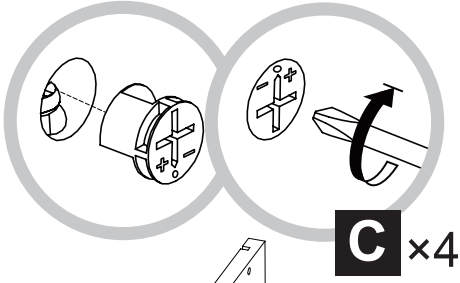

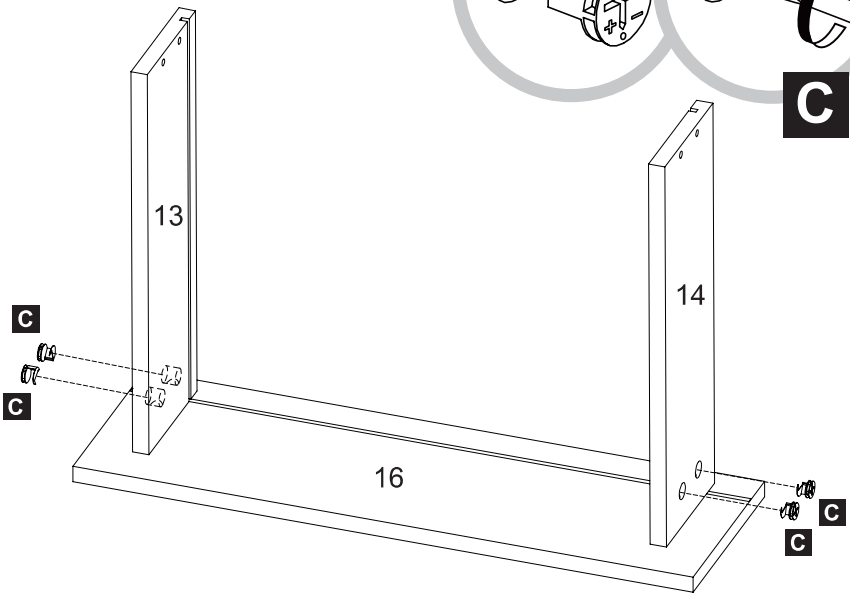

Step 31

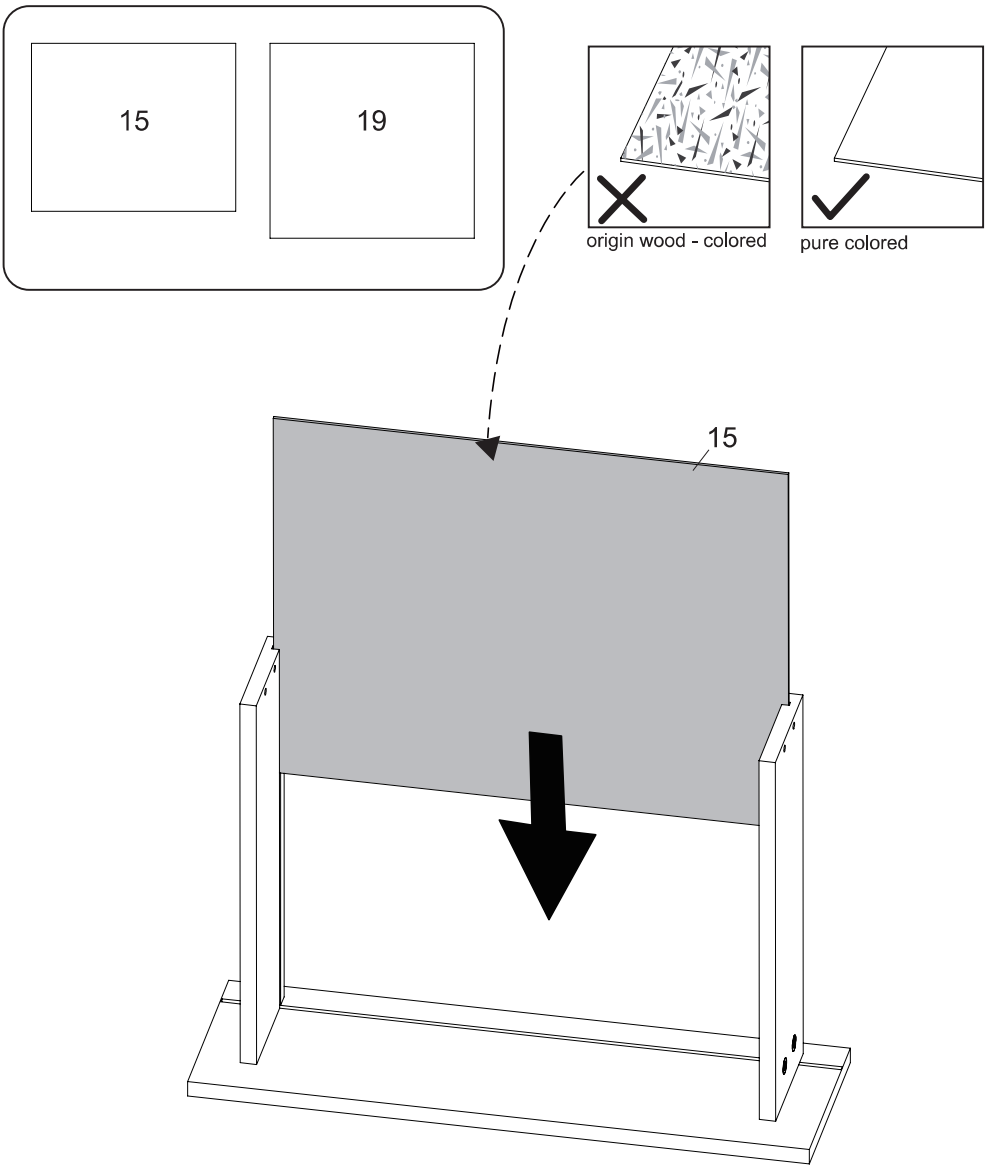

Step 32

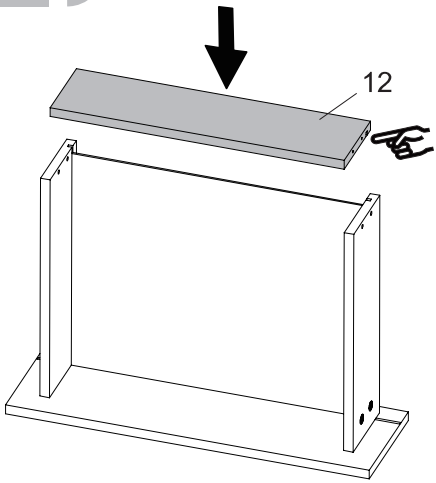

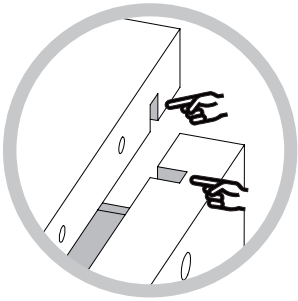

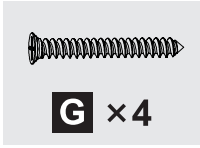

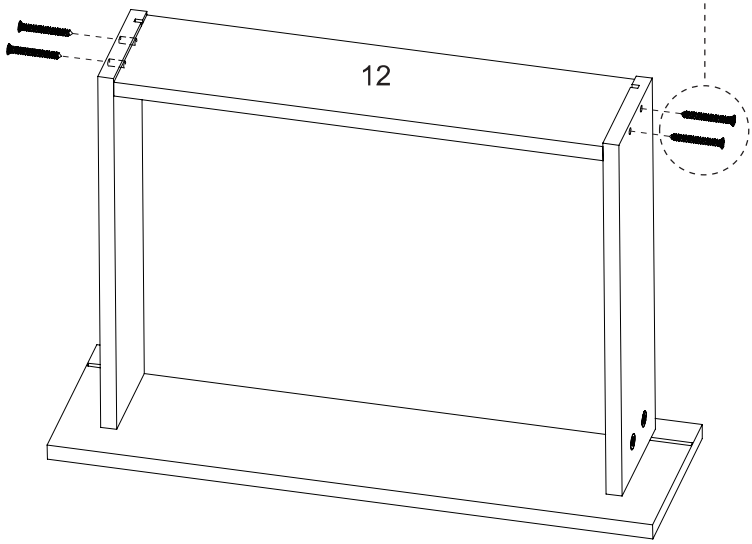

Step 33

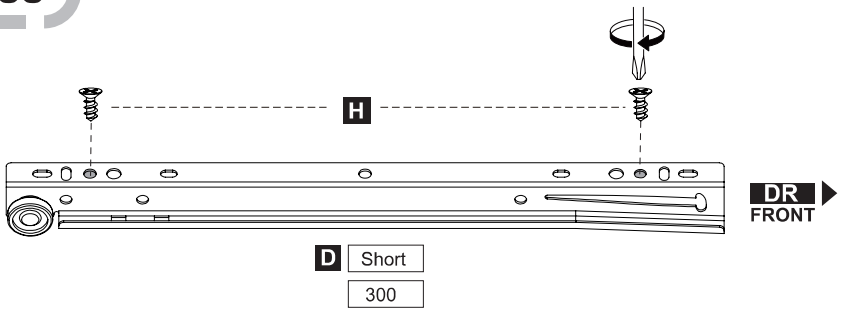
H
DR
FRONT
D
Short
300

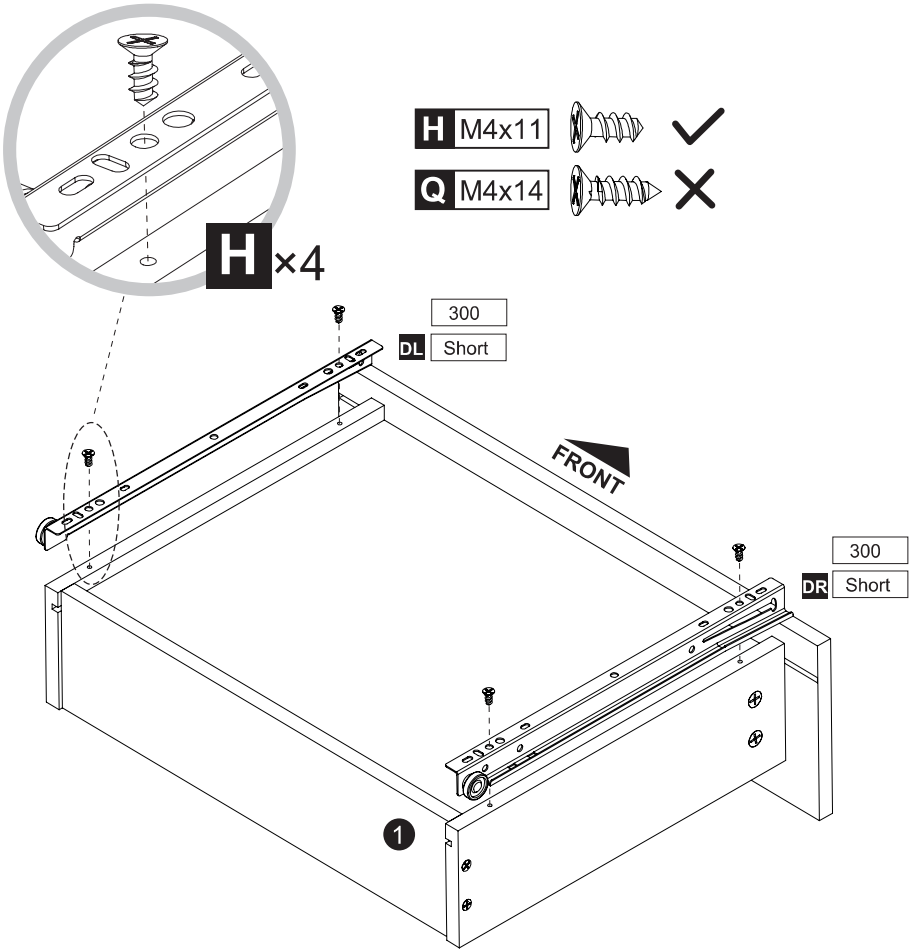
H M4x11
Q M4x14
H ×4
300
DL
Short
FRONT
300
DR
Short
1

Step 34

Let the grooves on part **17** and **18** be connected to the groove on part **16 .**

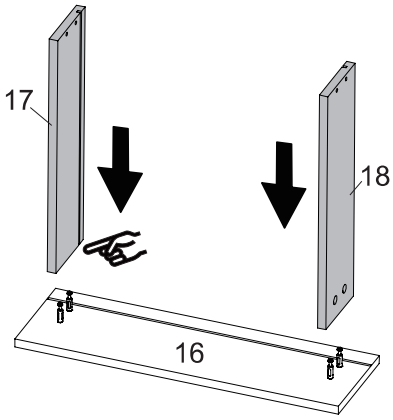



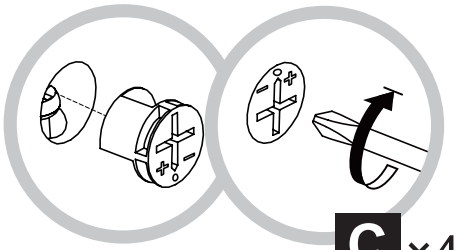

C ×4

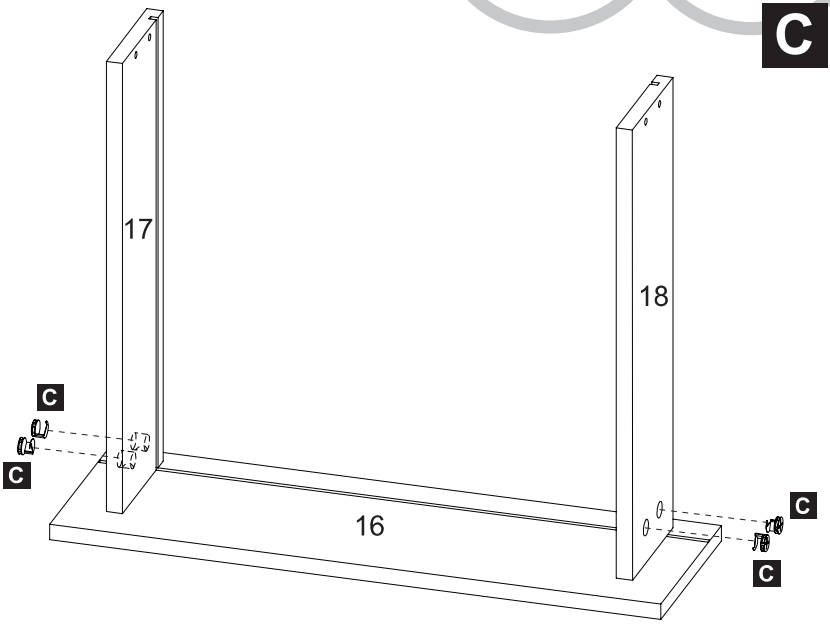

×2

Step 35

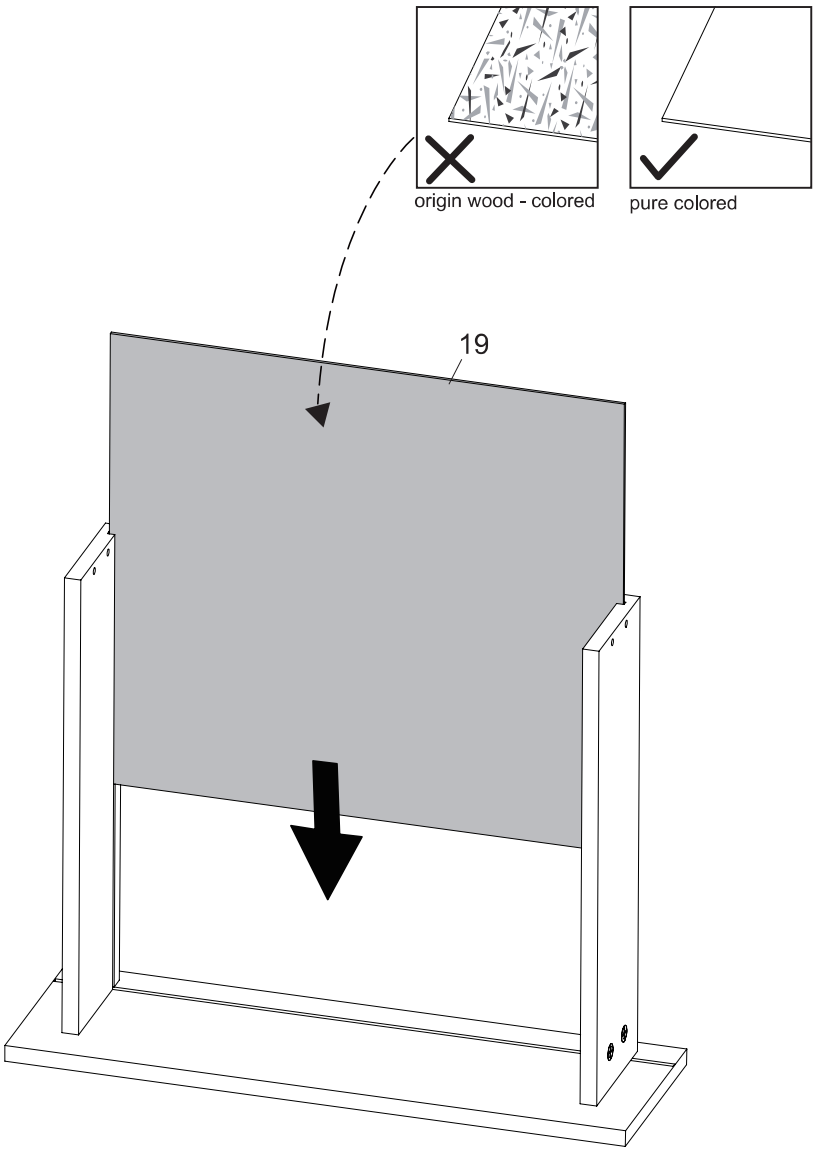

×2

Step 36

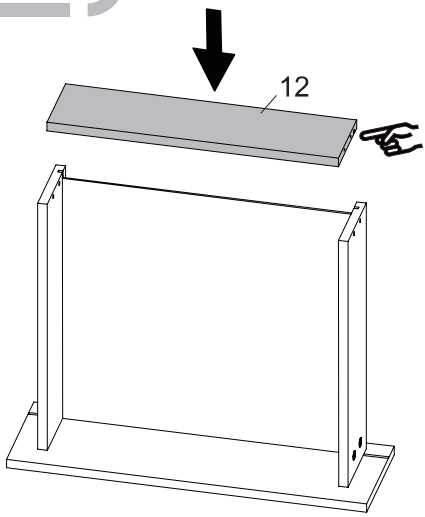

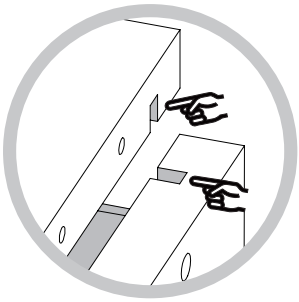



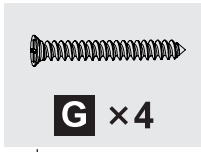

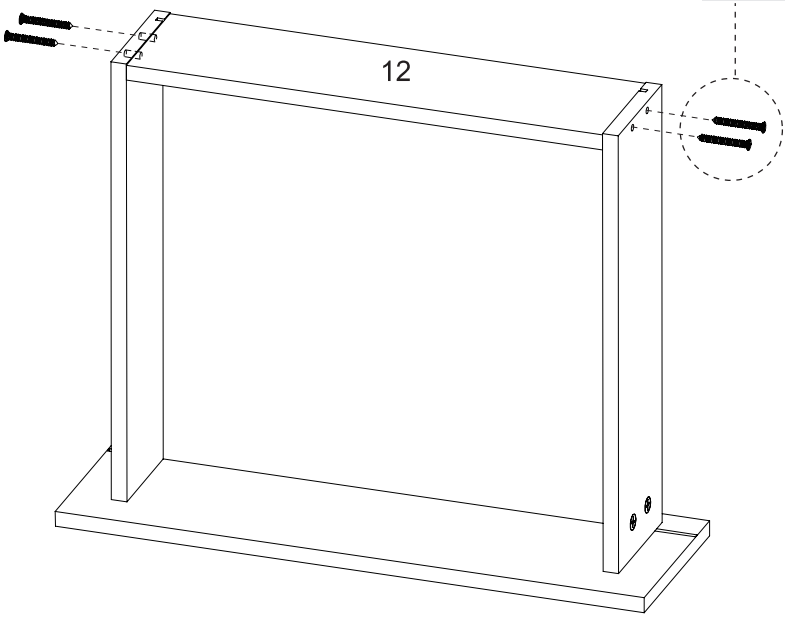

×2

Step 37

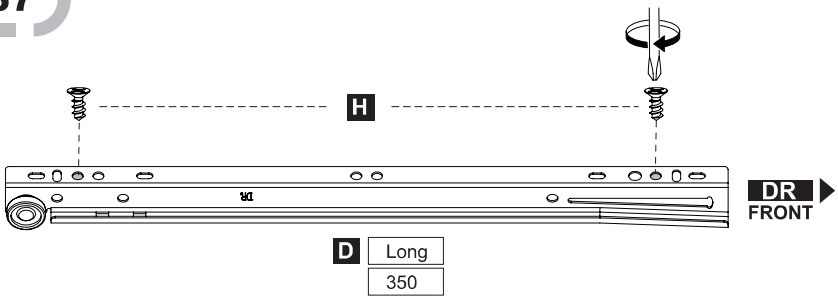
H
DR
FRONT
D
Long
350

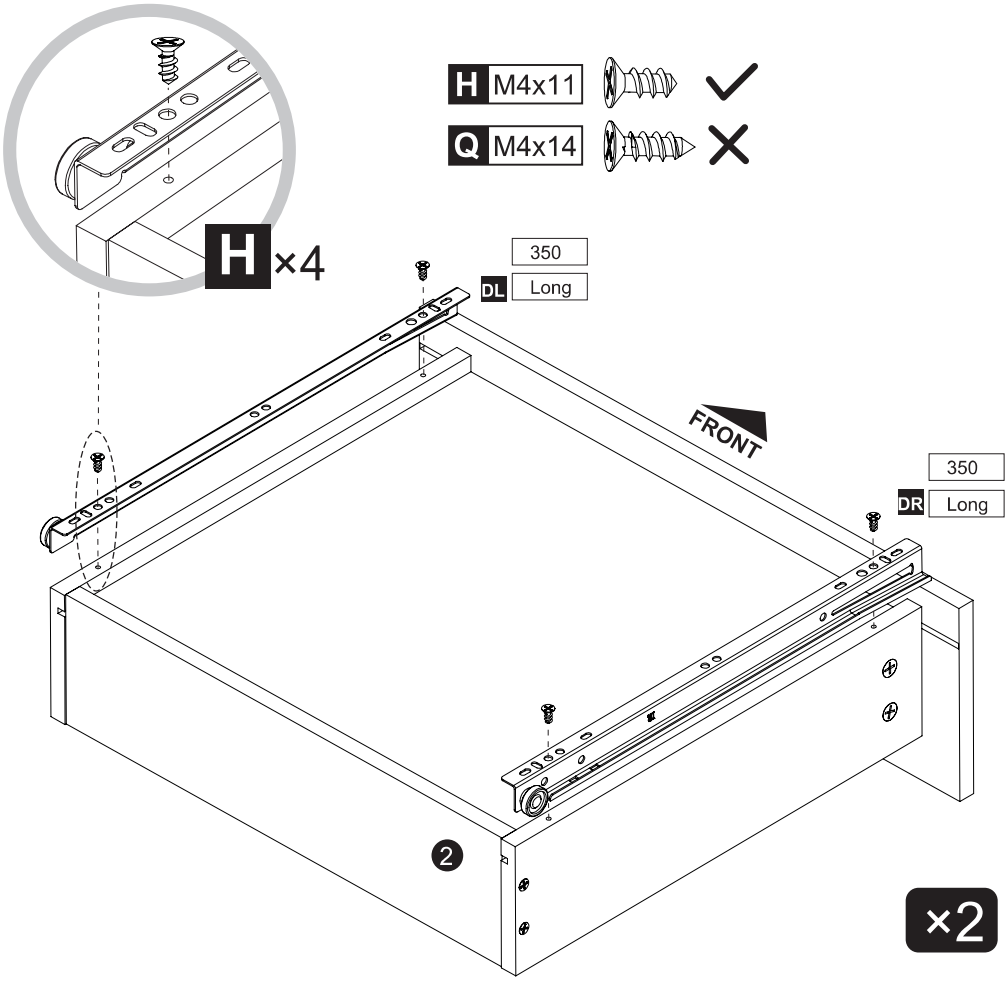
H M4x11
Q M4x14
H ×4
350
DL
Long
FRONT
350
DR
Long
2
×2

Step 38

Please paste the hole sticker according to actual needs.

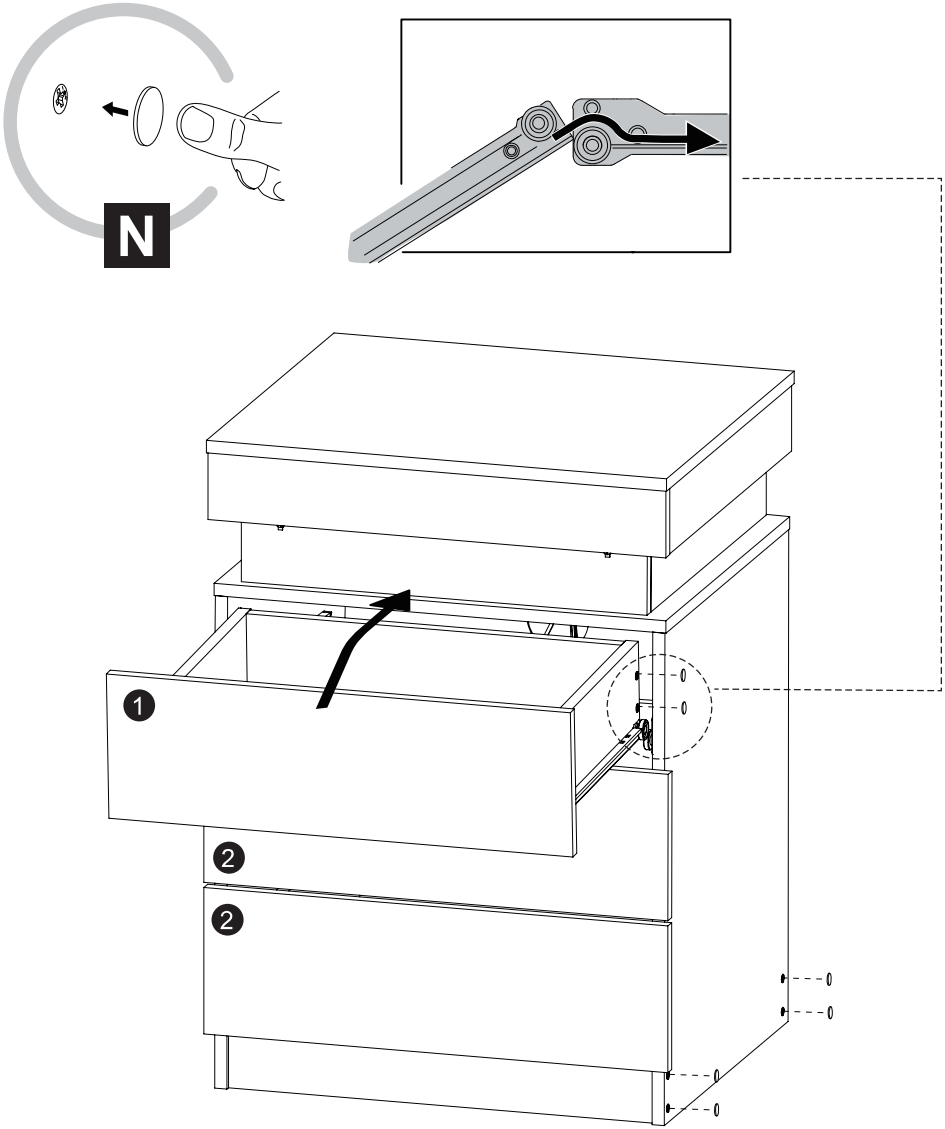

User instruction
for led strip light

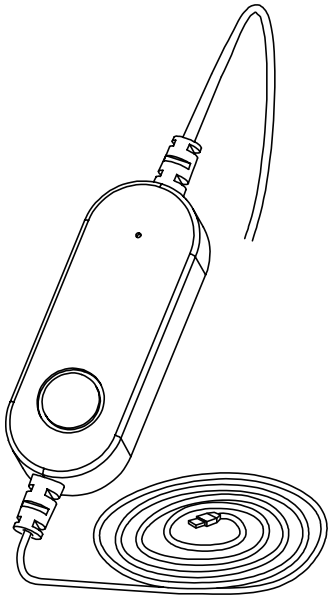

If you have any further questions, please feel free to contact our customer service，we will reply to you within 24 hours.

CE RoHS FC

Instructions for use of led controller

IOS and Android system can download the APP on the cell phone to control the lighting.

1. There are the following ways to download the APP





2. Download steps:
①Open APP Store or Google Play on the cell phone.
②Search
③Click "Download" to get the APP.

3. Use APP to connect lighting devices by following the provided.

WARNING

★ DO NOT IMMERSE IN FIRE

★ CHILDREN UNDER THE AGE OF 16 SHOULD USE THIS PRODUCT UNDER ADULT SUPERVISION.

Music Remote(Advanced Version)

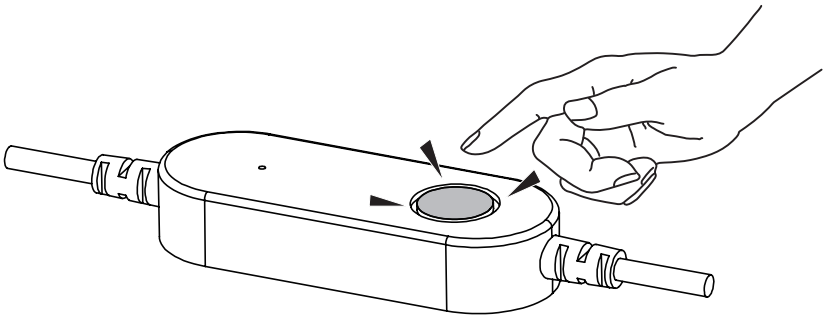

Integrated Control Switch Function Description:

1.Single Short Press: Pressing the switch once quickly turns on the light.

2.Single Short press (again): Change light Mode and Color (There are a total of 40 light modes and colors available, and each press cycles through them.)

3.Single long press for 3 seconds: Turn off the light.

Click the Settings button to access the app settings and instructions

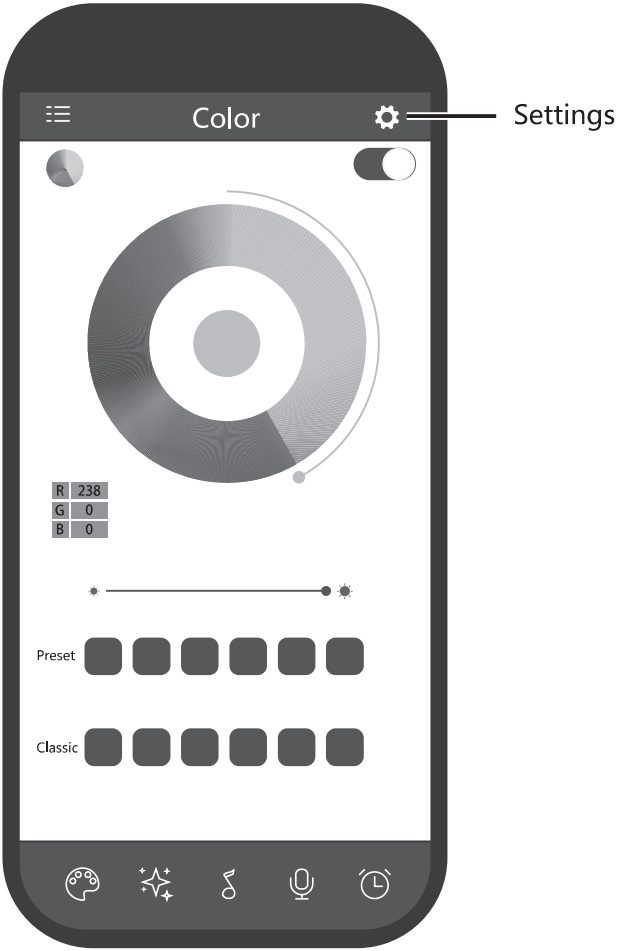

Settings

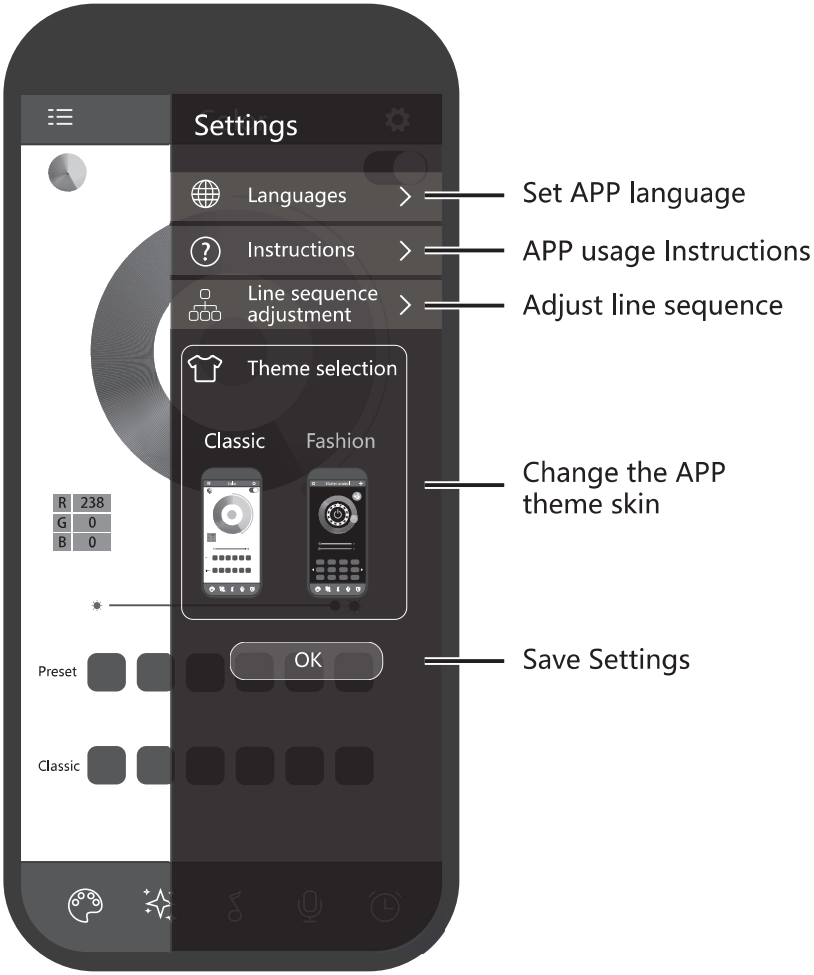
Settings
Languages
Instructions
Line sequence adjustment
Theme selection
Classic
Fashion
R 238
G 0
B 0
Preset
OK
Classic
Set APP language
APP usage Instructions
Adjust line sequence
Change the APP theme skin
Save Settings

Instructions

Swipe right to view the app's usage instructions

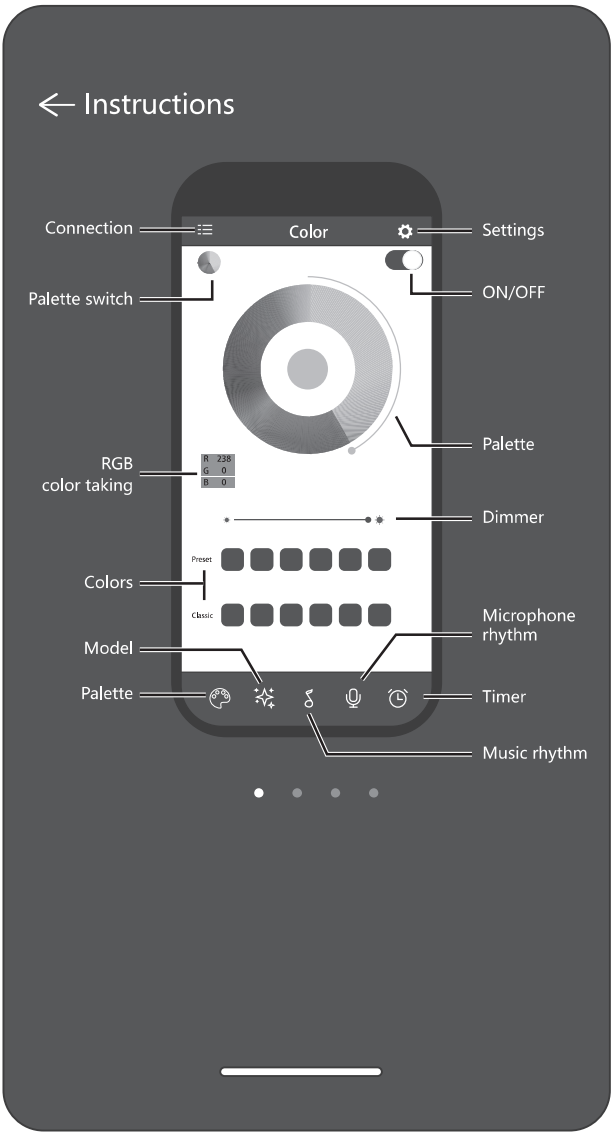

Line sequence adjustment

Select the light sequence of the lamp band

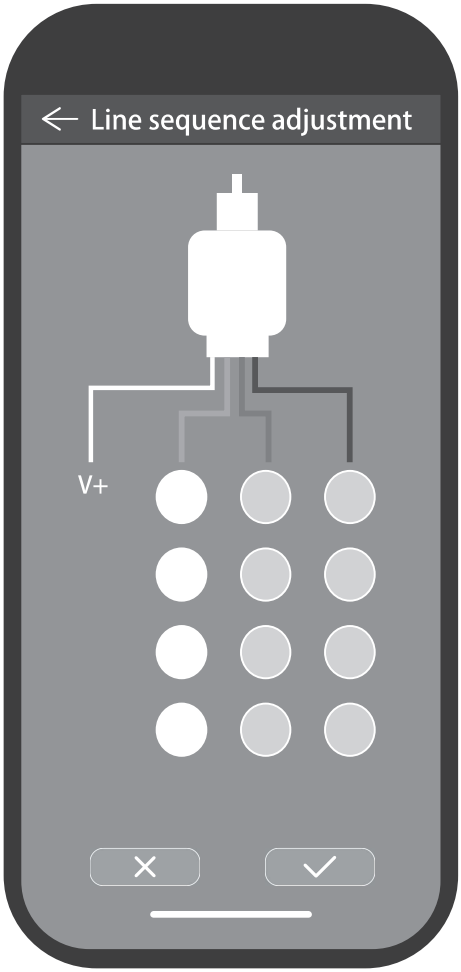

DESIGN IS IN THE DETAILS

Find **5** differences between the **2** images.



