Assembly Instructions

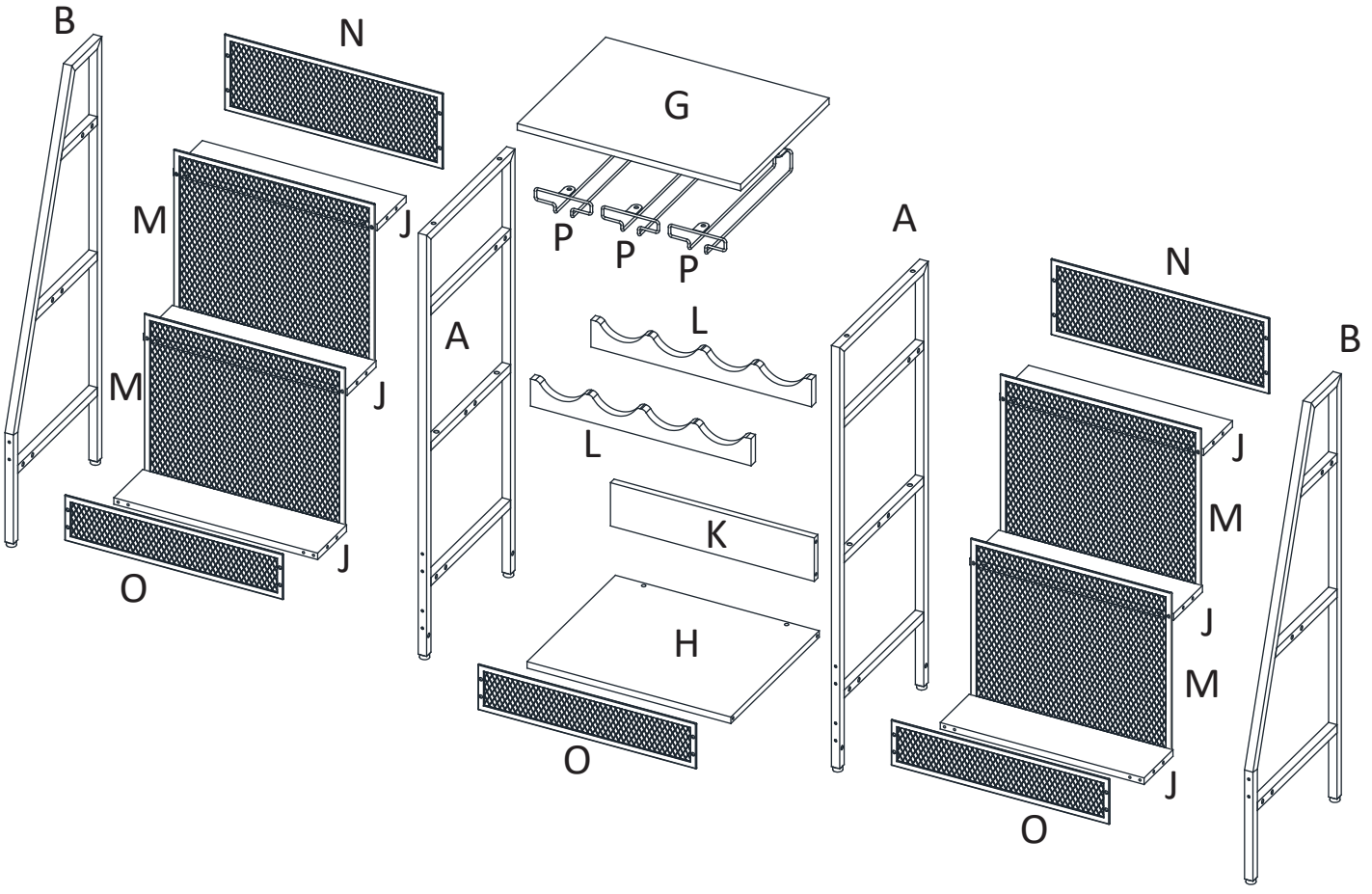

CAUTION:When tightening the screws ,tighten sequentially.
Do not tighten any screws fully and then towards the next one.
When every part is OK,then tighten all the screws.

Parts Included

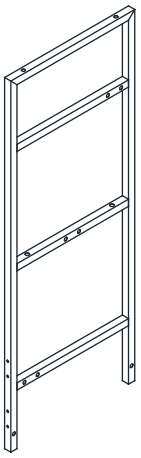

2pcs

A

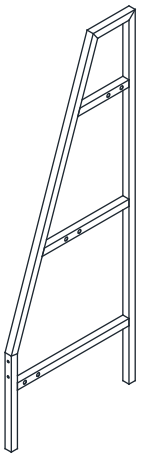

2pcs

B

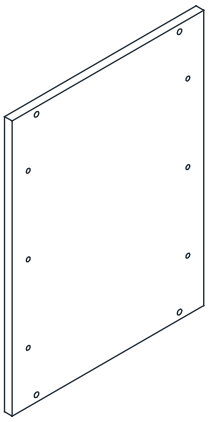

1pc

G

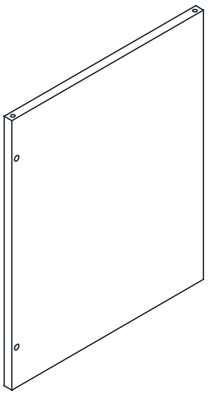

1pc

H



6pcs

J



1pc

K



2pcs

L

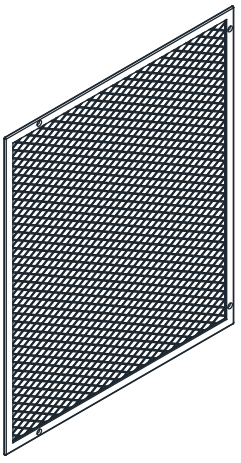

4pcs

M

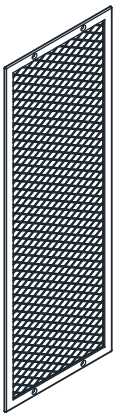

2pcs

N



3pcs

O

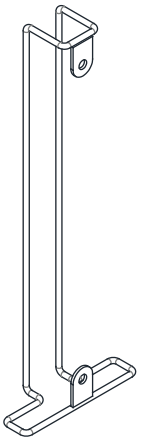

3pcs

P

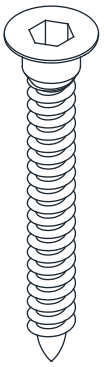

36pcs

1

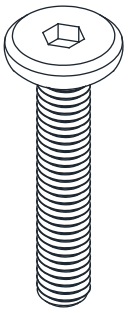

5pcs

2

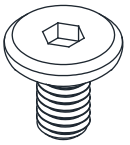

8pcs

3

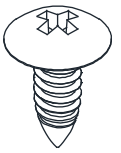

38pcs

4

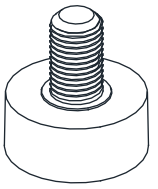

8pcs

5



1pc

6

1. Connect the three iron frames P to the wooden board G with screws (3) .

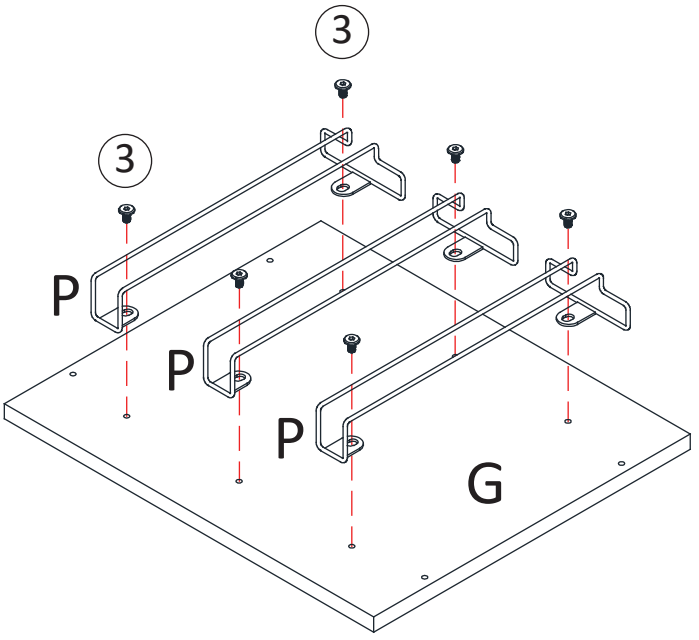

3		*6
6	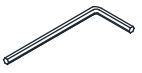	

2. Connect board H to board K with screw (1) .

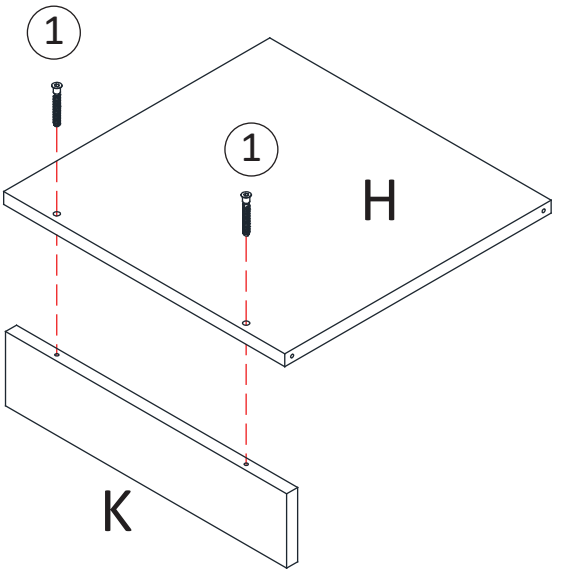

1	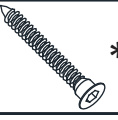	*2
6		

3. Adjustable feets (5) are installed at the bottom of 4 iron frames.

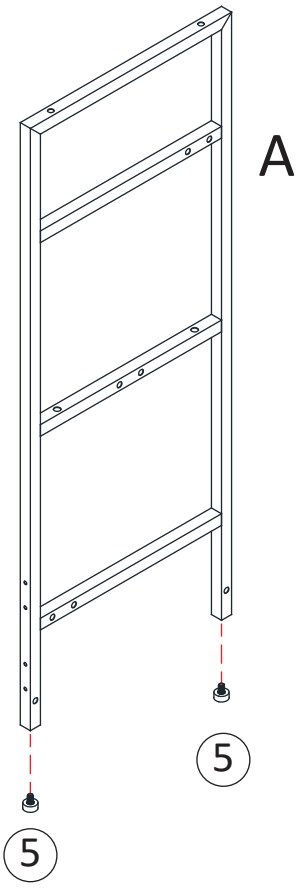

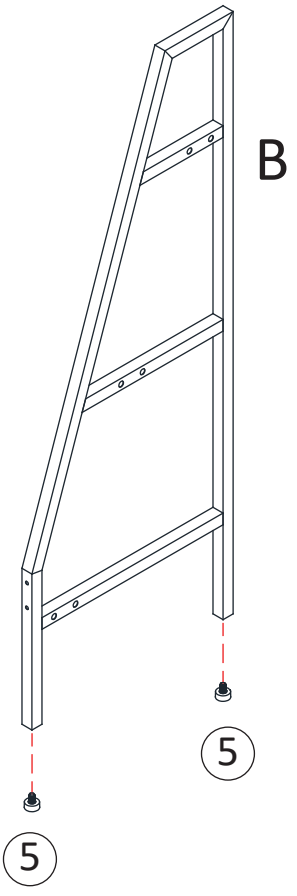

X2

4. Connect A and B to 3 wooden boards J with screws ①.

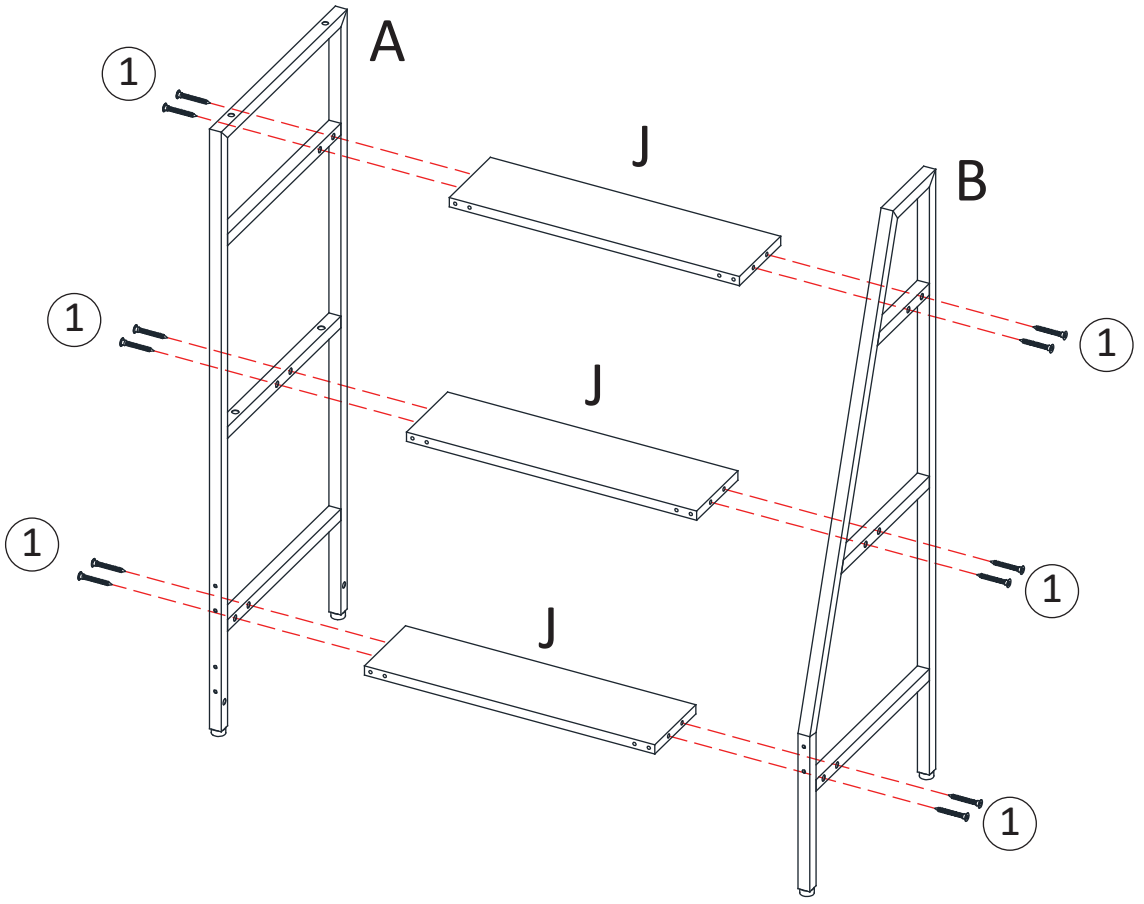

①	*12
6	

5. Connect 2 iron frame A and wooden board H with screws ①.

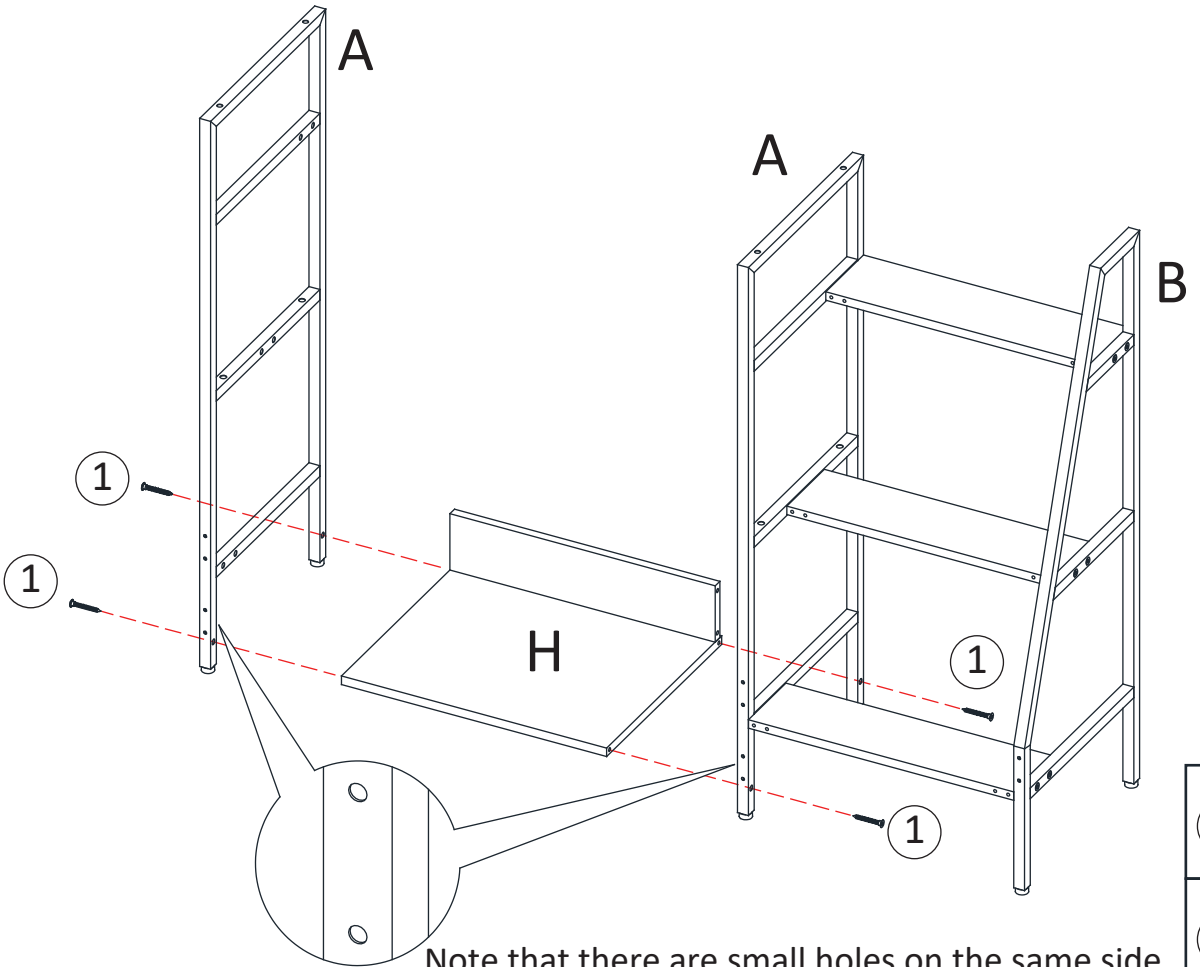

Note that there are small holes on the same side.

①	*4
6	

6. Wooden board G are attached to the top of the two iron frames A with screws ②.
Two wooden boards L are connected with screws ① in the center of two frames A.

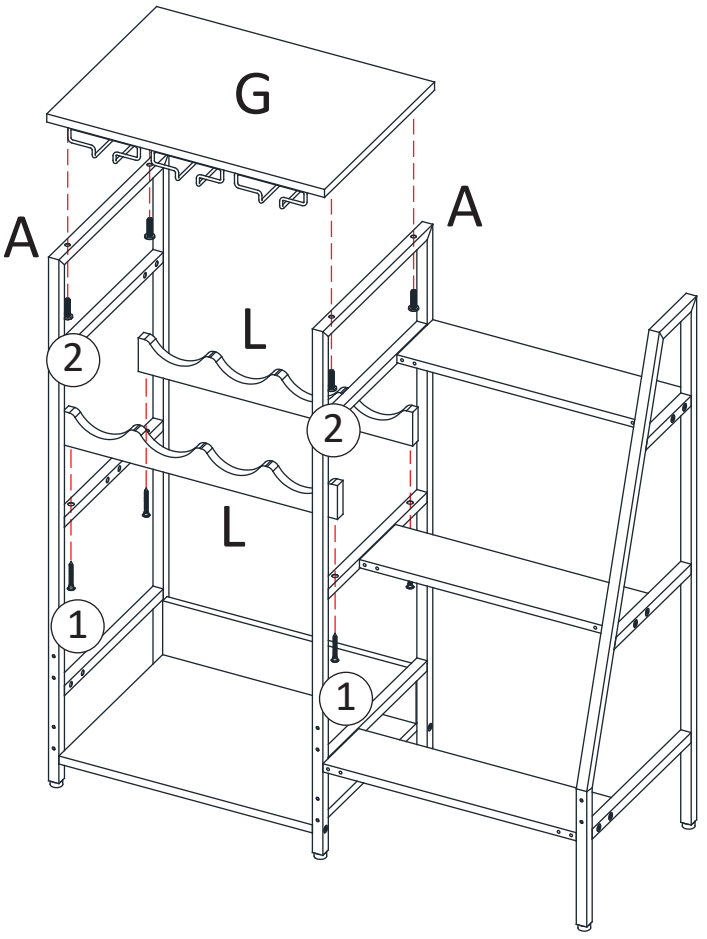

①	*4
②	*4
⑥	

7. Connect 3 wooden boards J and iron frame A\B with screws ①.

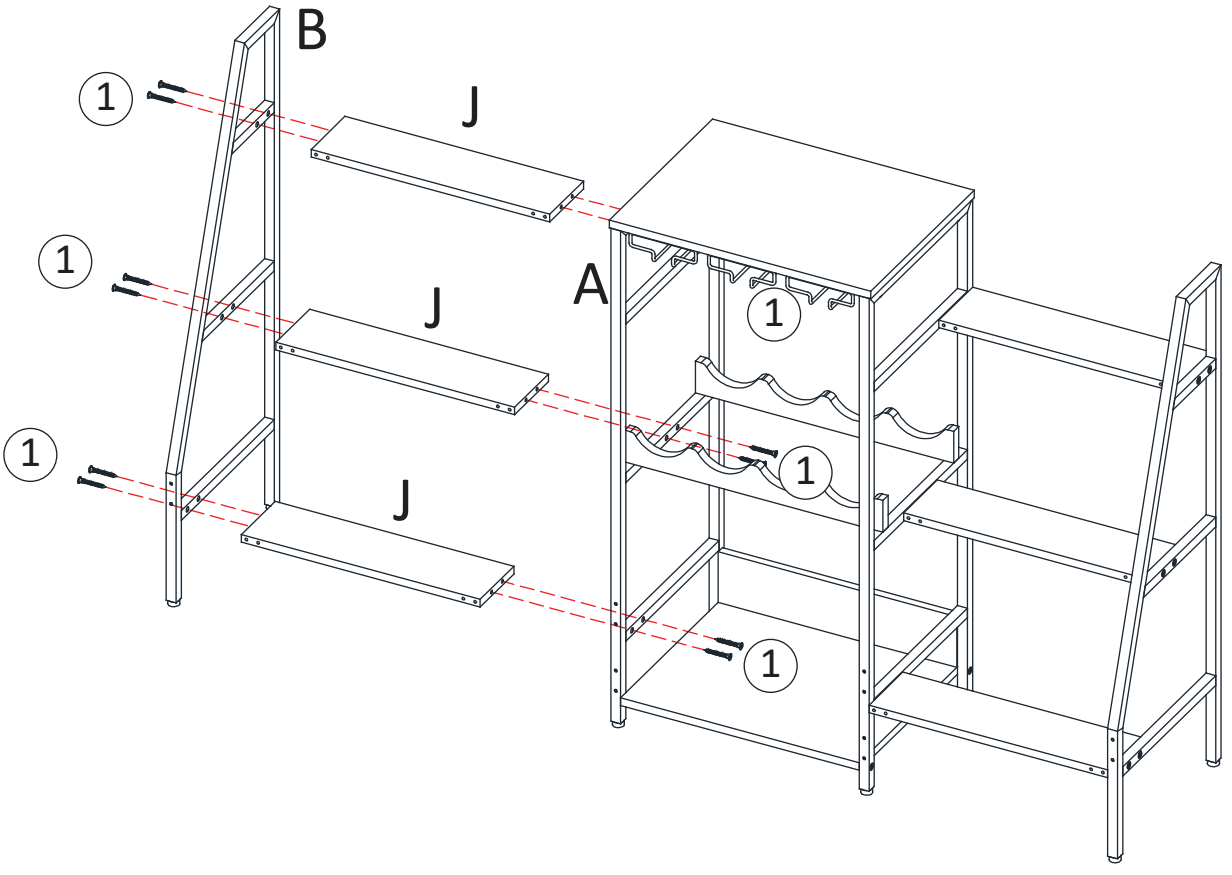

①	*12
⑥	

8. 3 pieces of iron mesh O are fixed to the front of the frame with screws ④.

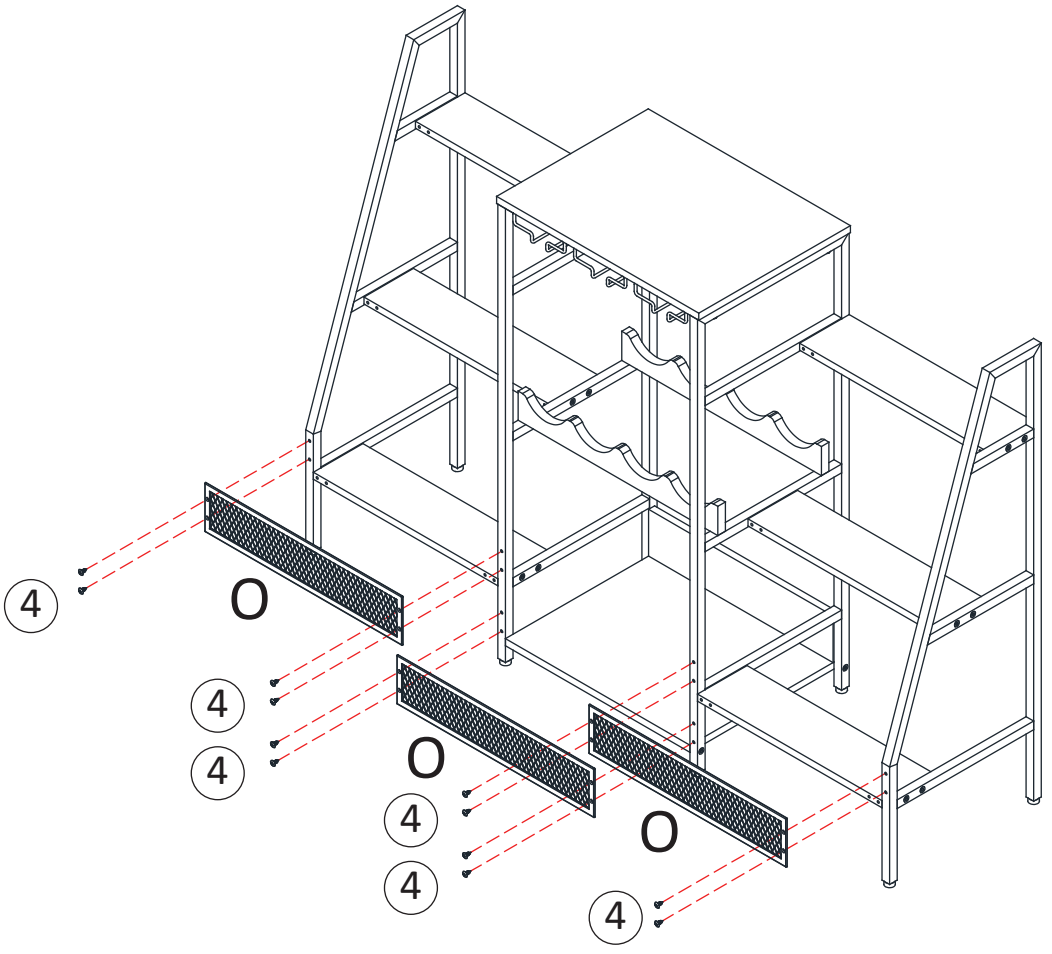

④ *12

9. 4 pieces of iron mesh M are fixed to the wooden board J with screws ④.

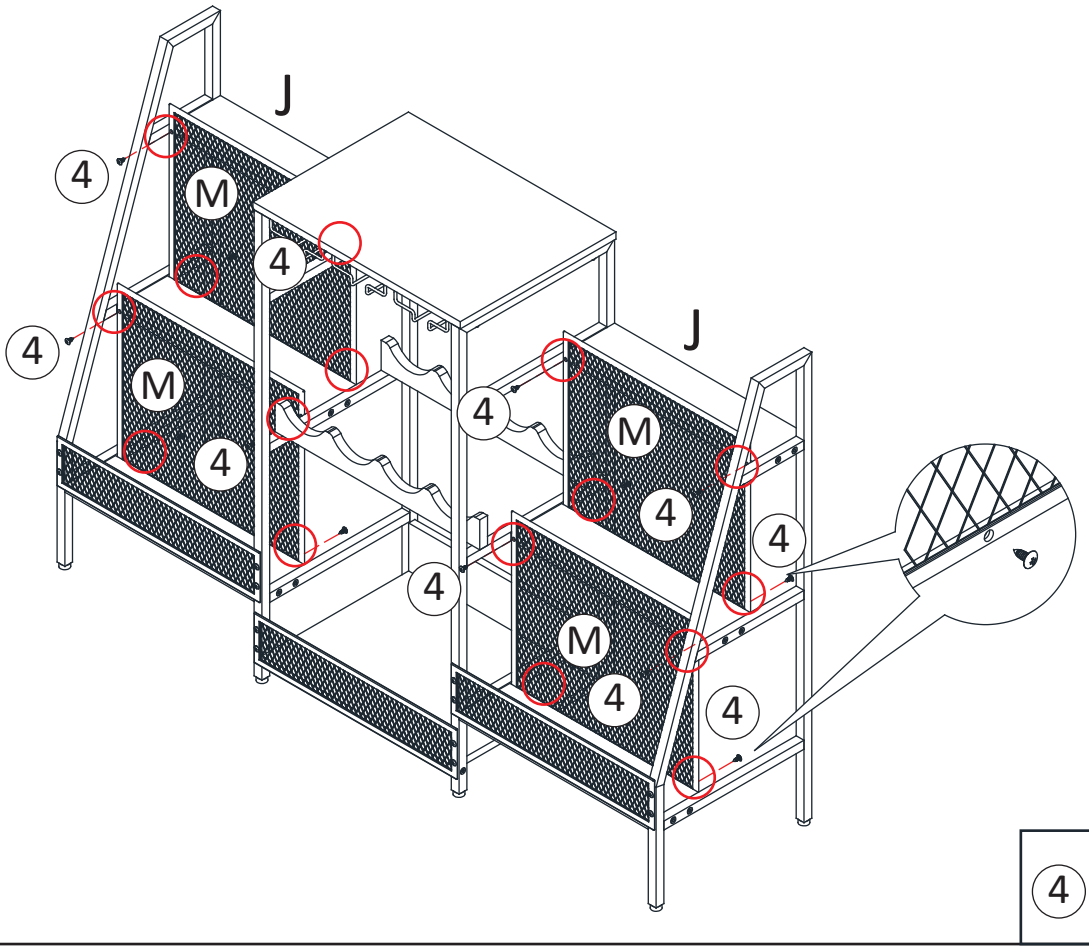

④ *16

10. 2 iron mesh N are fixed to the back of the frame with screws ④.

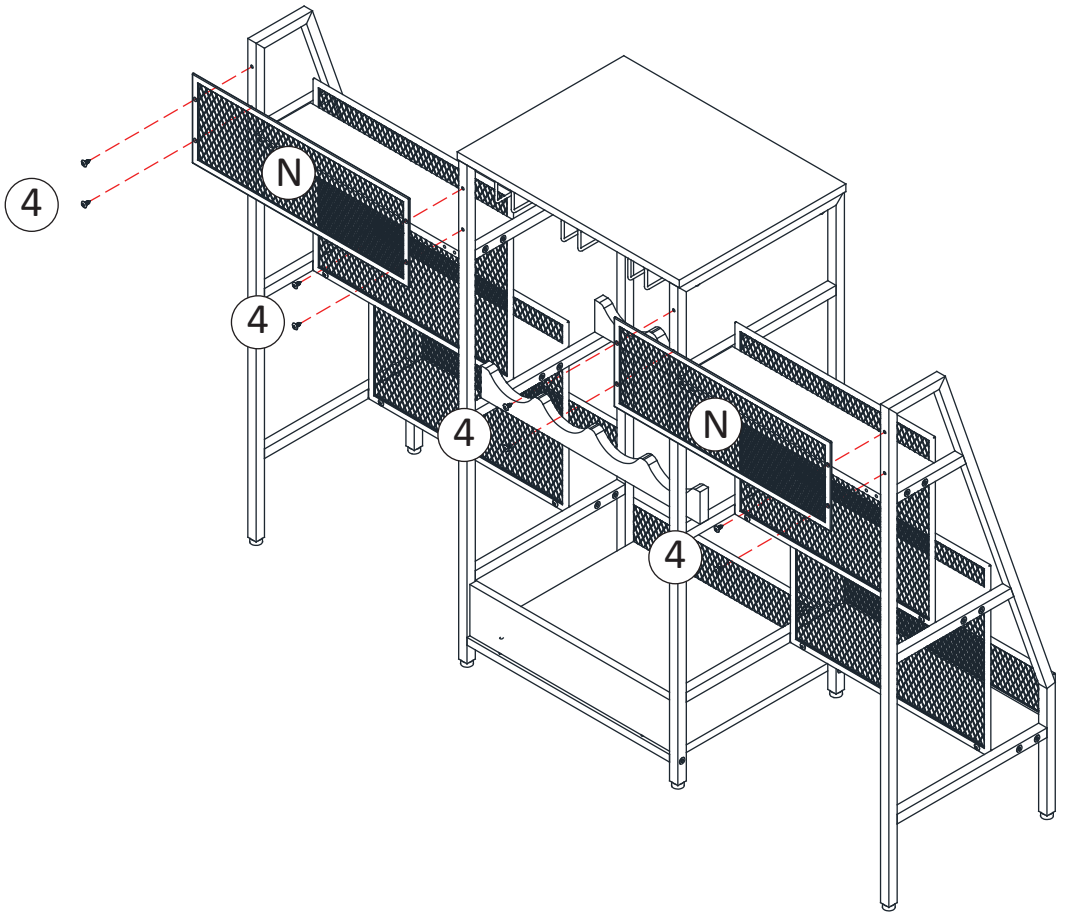

④ *8

11. Finished!

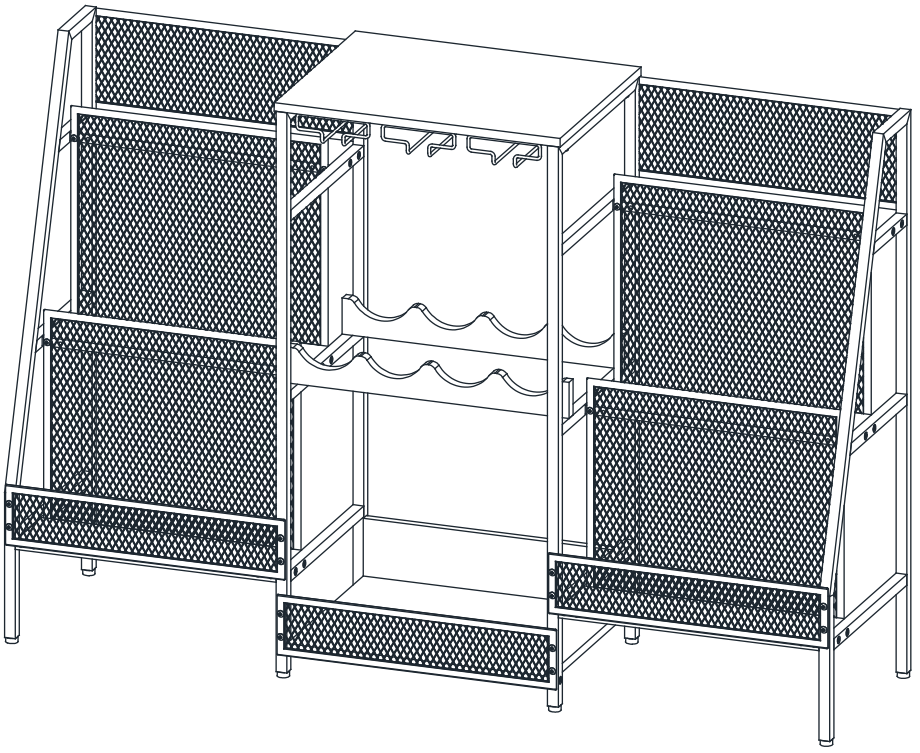

Thank you for choosing this product!