Assembly Instruction

ARCHED CABINET

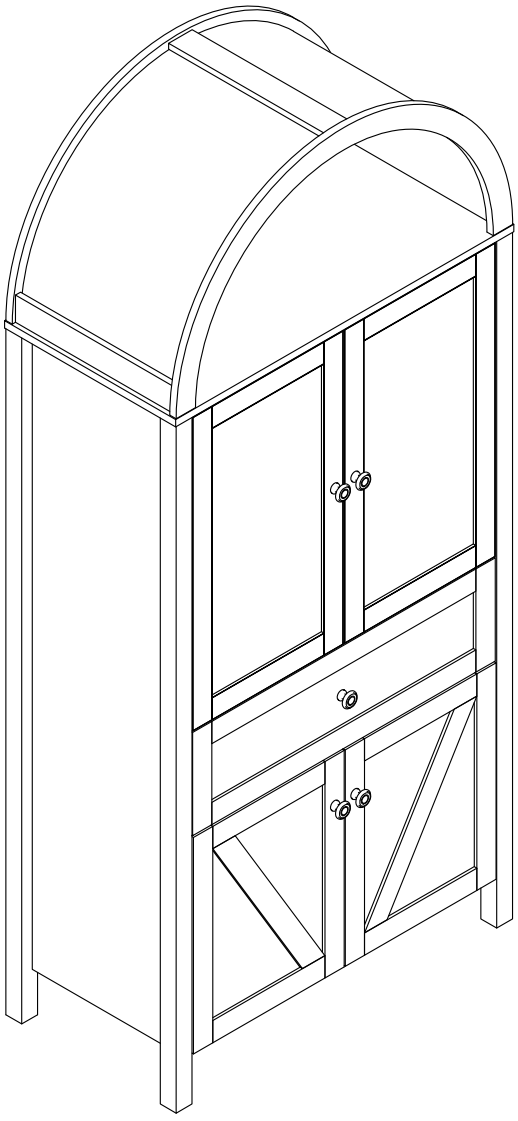

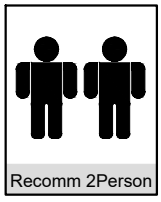

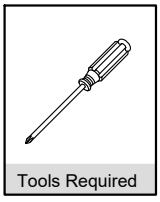

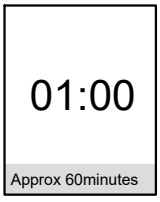

All rights reserved.

WARNING

Recommended Maximum Weight

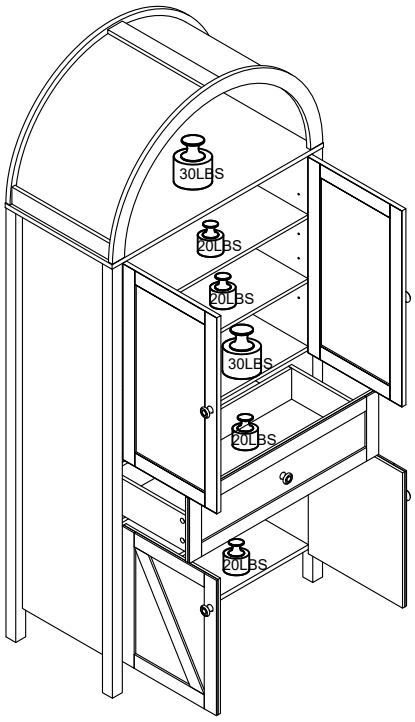

General Guidelines

.Please read the following instruction carefully and use the product accordingly.
.Please keep this manual and hand it over when you transfer the product.
.This summary may not include every detail of all variations and considered steps.Please contact us when further information and help are needed.

Notes

. This unit has been designed to support the maximum loads shown. Exceeding these load limits could cause sagging, instability, product collapse, and/or serious injury.
.The product is intended for indoor use only. The product must be assembled and used in accordance with the provisions of this manual. Personal injury and/or damage to product may occur if products are used outside of their intended purposes and/or if products have been changed/modified from their original design. The seller does not assume any responsibility or liability with respect to any injury/damage caused by incorrect assembly or improper use.
.Avoid long-term exposure to humid environments to prevent mildew.
.Keep the product away from fire sources and high temperatures. Do not expose this product to direct sunlight.
.Do not place any hot project on the surface of the product.
.If there are any defective or missing parts after unpacking, please cease assembly immediately and contact us.
.It is important that each step is performed in correct order to avoid difficulties.
.Please assemble the item on a spacious surface and do not place the unwrapped product directly on the ground to avoid product damage.
.Please do not stand or sit on the wooden boards.
.Please wear gloves during the assembly and/or disassembly process to avoid scratches from any sharp edges.
.Please match the corresponding part and fitting based on the part number in the manual.
.If the part does not match with the fitting, please check the pieces as specified in this manual.
.During assembling, firstly loosely align all screws with corresponding pre-drilled holes and then tighten the screws one by one.
.Periodically inspect screw tightness while the product is in use.If necessary, retighten to ensure structural integrity.
.If you accidently spill water or another liquid on the surface, immediately wipe clean with a dry towel.
.Please keep the product away from sharp, pointed objects and corrosive substances to prevent product damage.
.Please place this item on level, solid ground during use.

Warnings

.During assembly, keep all small parts out of the reach of children.It may be fatal if swallowed or inhaled.
.Children should not climb or play on this product in order to avoid tipping over the furniture and causing serious injury.
.To ovoid the potential dangers of suffocation, please keep all parts and packaging(film, plastic bags,foam,etc.) away from babies and children.
.Keep sharp objects and corrosive items away from the product to avoid any damage or injury.
.Do not shake or move violently during use to avoid tipping over the product.

All rights reserved.

Parts

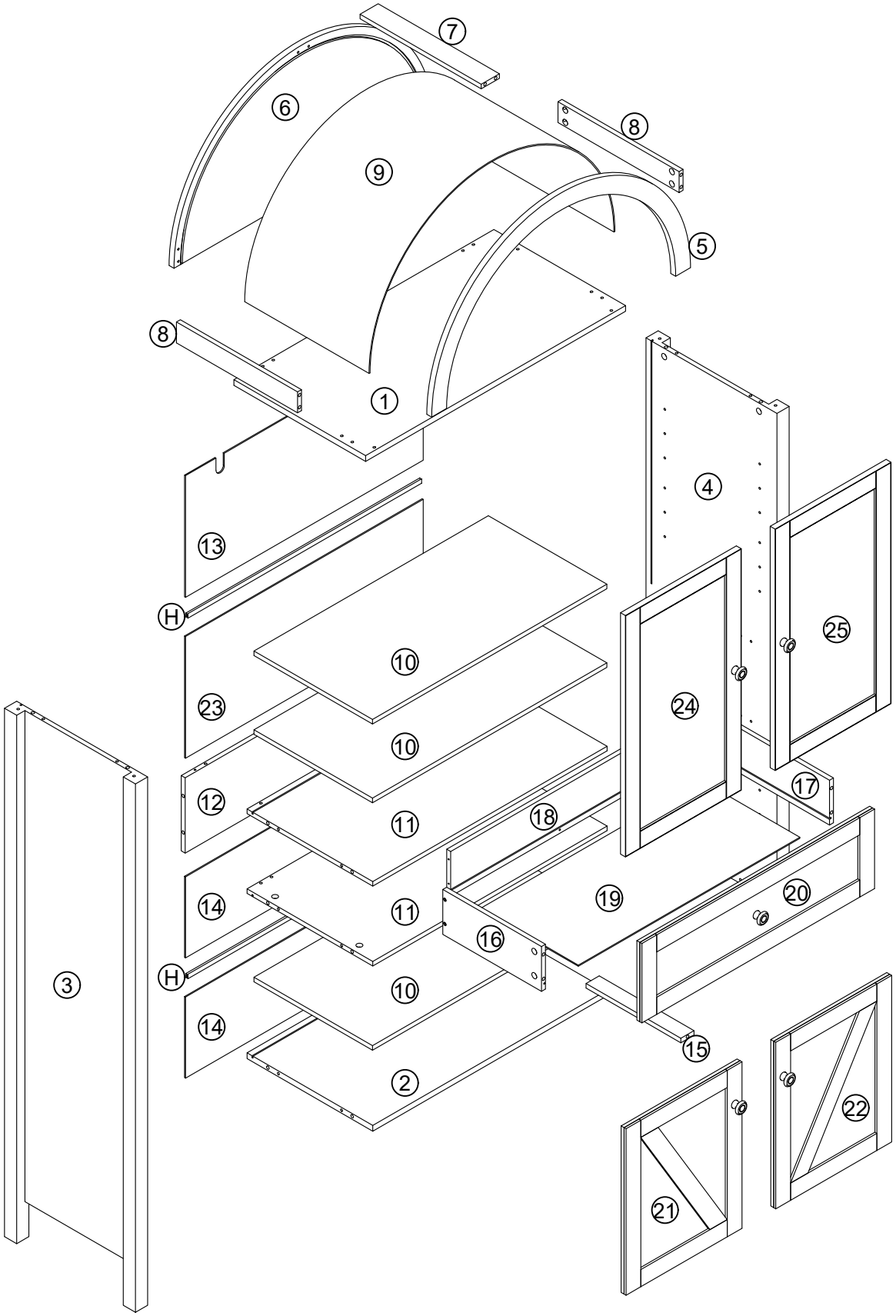

All rights reserved.

Parts

1-1

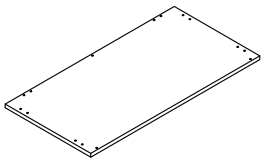 ☐ ① 1PCS	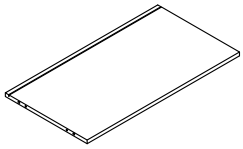 ☐ ② 1PCS	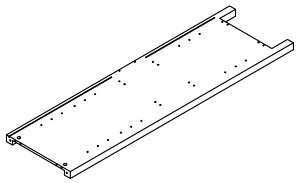 ☐ ③ 1PCS	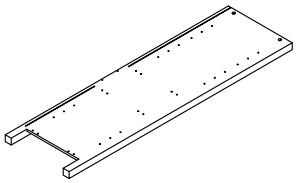 ☐ ④ 1PCS	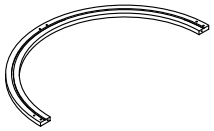 ☐ ⑤ 1PCS
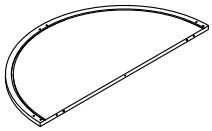 ☐ ⑥ 1PCS	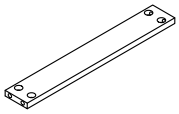 ☐ ⑦ 1PCS	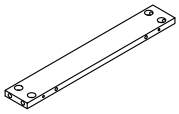 ☐ ⑧ 2PCS	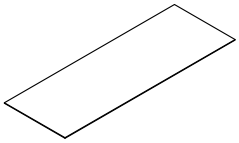 ☐ ⑨ 1PCS	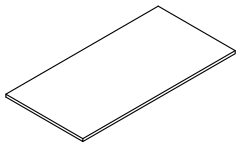 ☐ ⑩ 3PCS
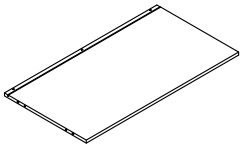 ☐ ⑪ 2PCS	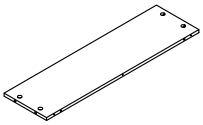 ☐ ⑫ 1PCS	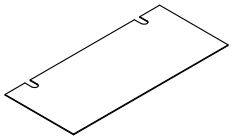 ☐ ⑬ 1PCS	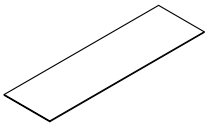 ☐ ⑭ 2PCS	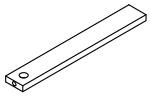 ☐ ⑮ 1PCS
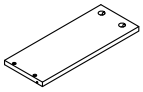 ☐ ⑯ 1PCS	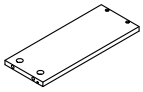 ☐ ⑰ 1PCS	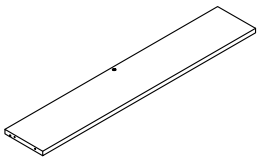 ☐ ⑱ 1PCS	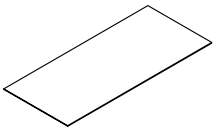 ☐ ⑲ 1PCS	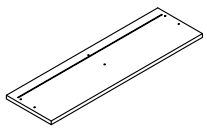 ☐ ⑳ 1PCS
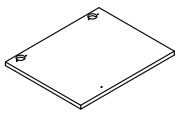 ☐ ㉑ 1PCS	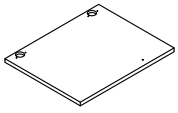 ☐ ㉒ 1PCS	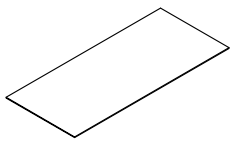 ☐ ㉓ 1PCS	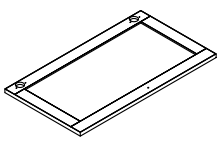 ☐ ㉔ 1PCS	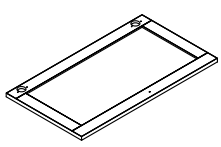 ☐ ㉕ 1PCS

All rights reserved.

Hardware

1-1

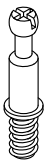 ☐ Ⓐ 37+2PCS	 ☐ Ⓑ 37+2PCS	 ☐ Ⓒ 30+2PCS	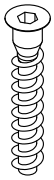 ☐ Ⓓ 15+1PCS	 ☐ Ⓔ 14+1PCS
 F1 5PCS  F2 5PCS ☐ Ⓕ	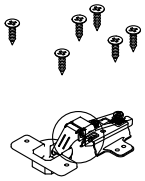 G2 48+3PCS G1 8PCS ☐ Ⓖ	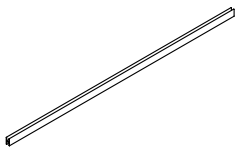 ☐ Ⓗ 2PCS	 ☐ Ⓙ 12+1PCS	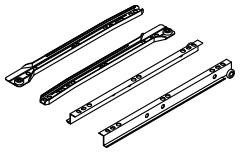 ☐ Ⓚ 1PCS
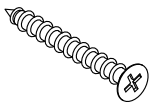 ☐ Ⓛ 5PCS	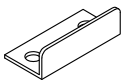 ☐ Ⓜ 1PCS	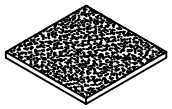 ☐ Ⓝ 4PCS	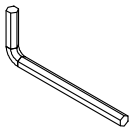 ☐ Ⓟ 1PCS	 Q1 16+1PCS  Q2 16+1PCS ☐ Ⓠ
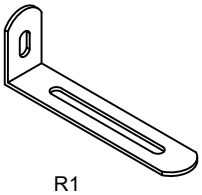 R1 2PCS 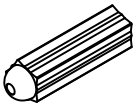 R2 2PCS  R3 2PCS  R4 2PCS ☐ Ⓡ				

All rights reserved.

Step 1

Connect the male camlock as directed in the assembly instructions using a screwdriver.

1

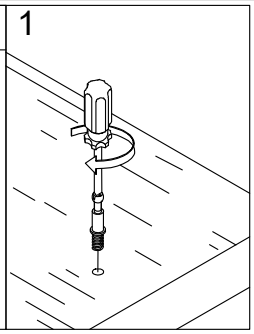

Step 2

Push the male camlock into the entry hole.

2

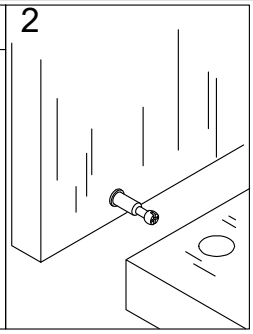

Step 3

Insert the female camlock as shown in the instruction.

Note: ensure that the arrow on the top of the camlock points towards the entry hole for the male camlock.

3

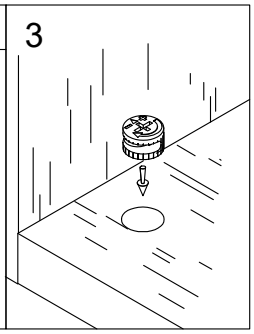

Step 4

Turn the female camlock 180 degrees clockwise with a screwdriver to complete the locking.

4

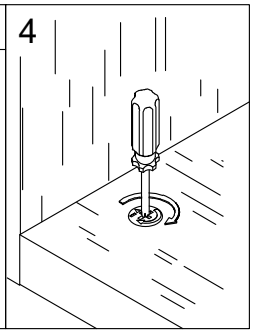

CL

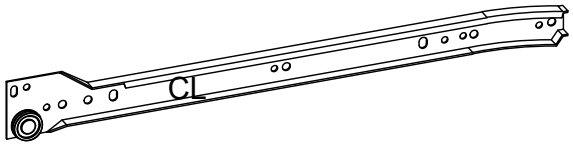

CR

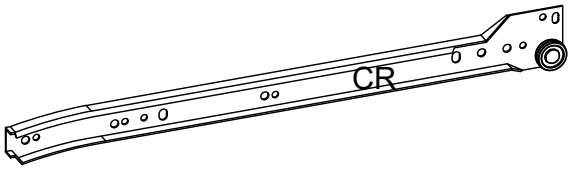

DL

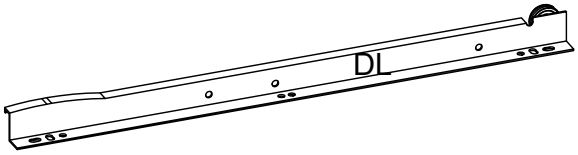

DR

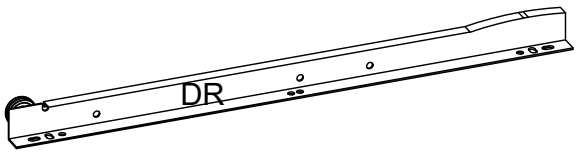

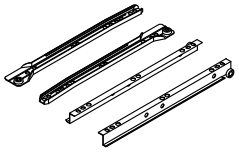

Ⓚ

All rights reserved.

STEP1

⑪* 2 ⑫* 1 Ⓒ* 4 Ⓓ* 6

Ⓟ* 1

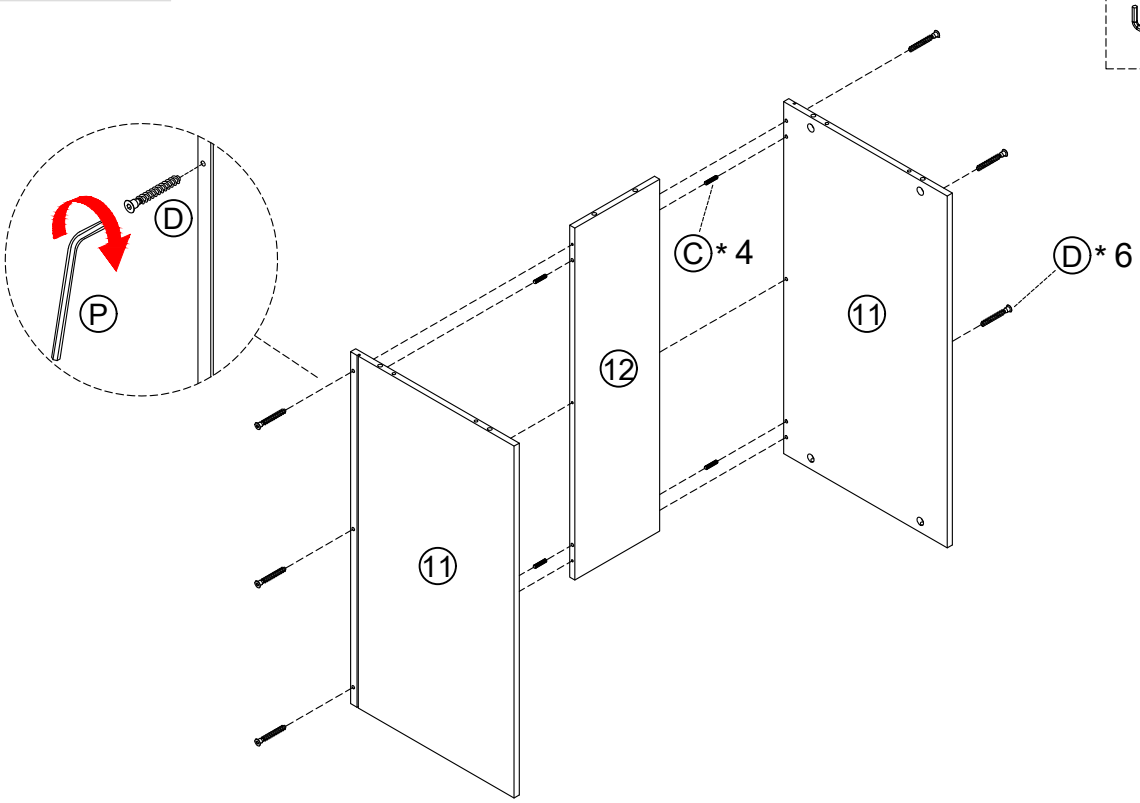

STEP2

③* 1 ④* 1 Ⓐ* 16 Ⓔ* 6 CL* 1 CR* 1

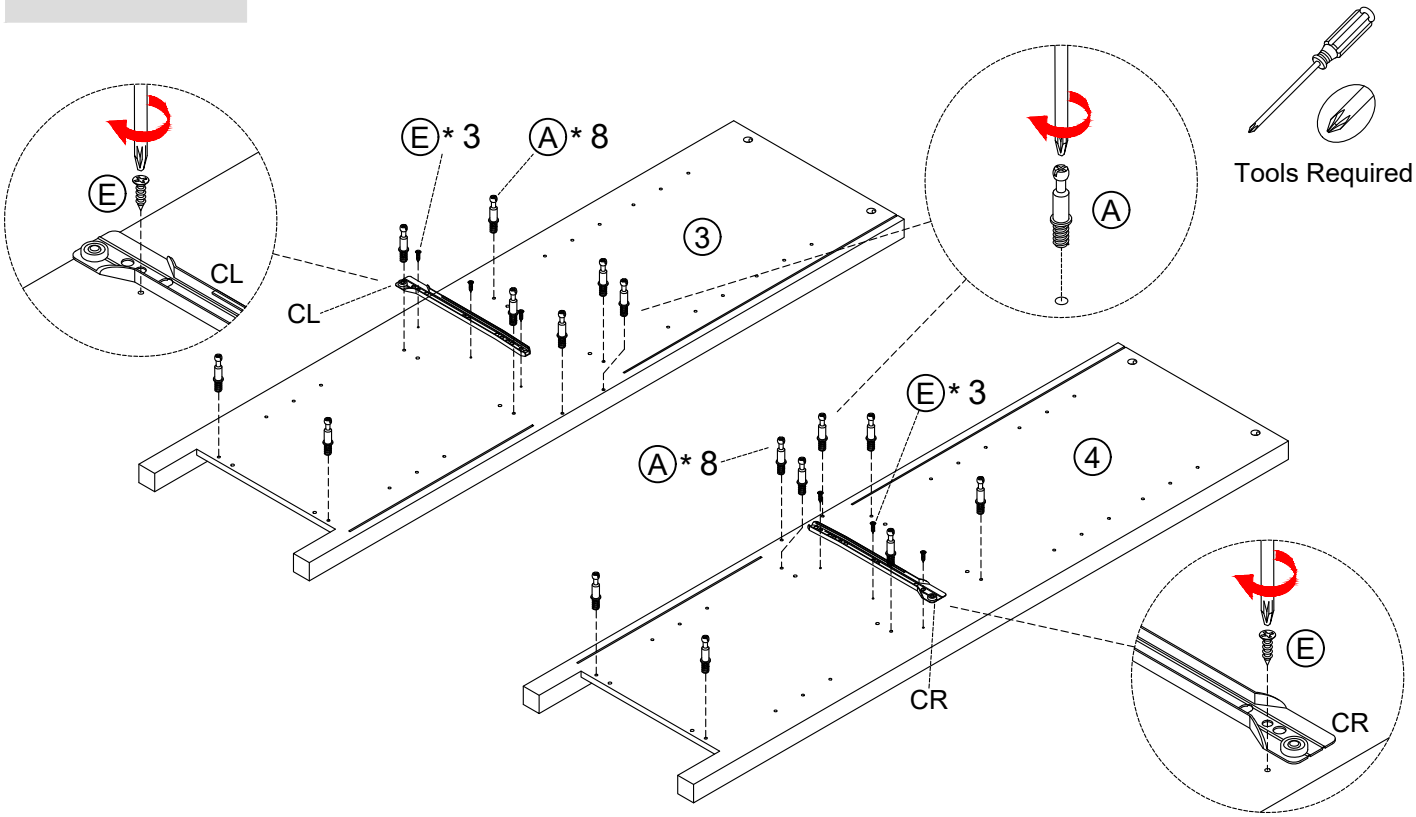

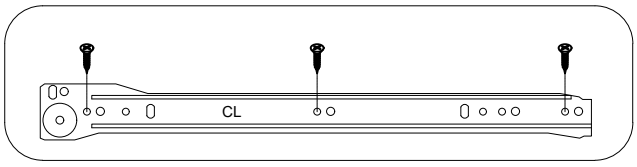

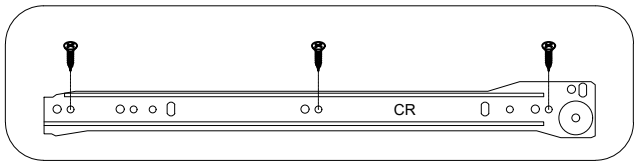

All rights reserved.

STEP3

②* 1 Ⓑ* 8 Ⓒ* 6



Tools Required

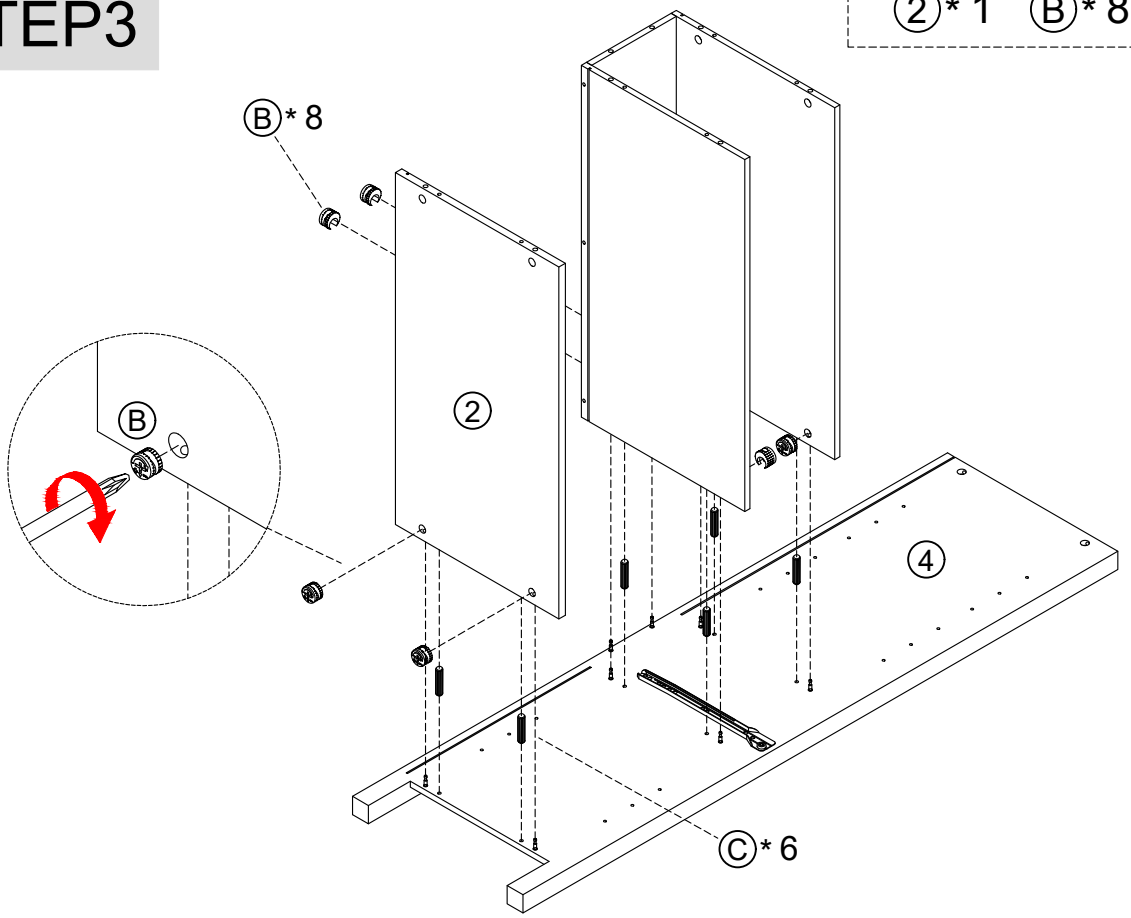

STEP4

⑭* 2 Ⓗ* 1

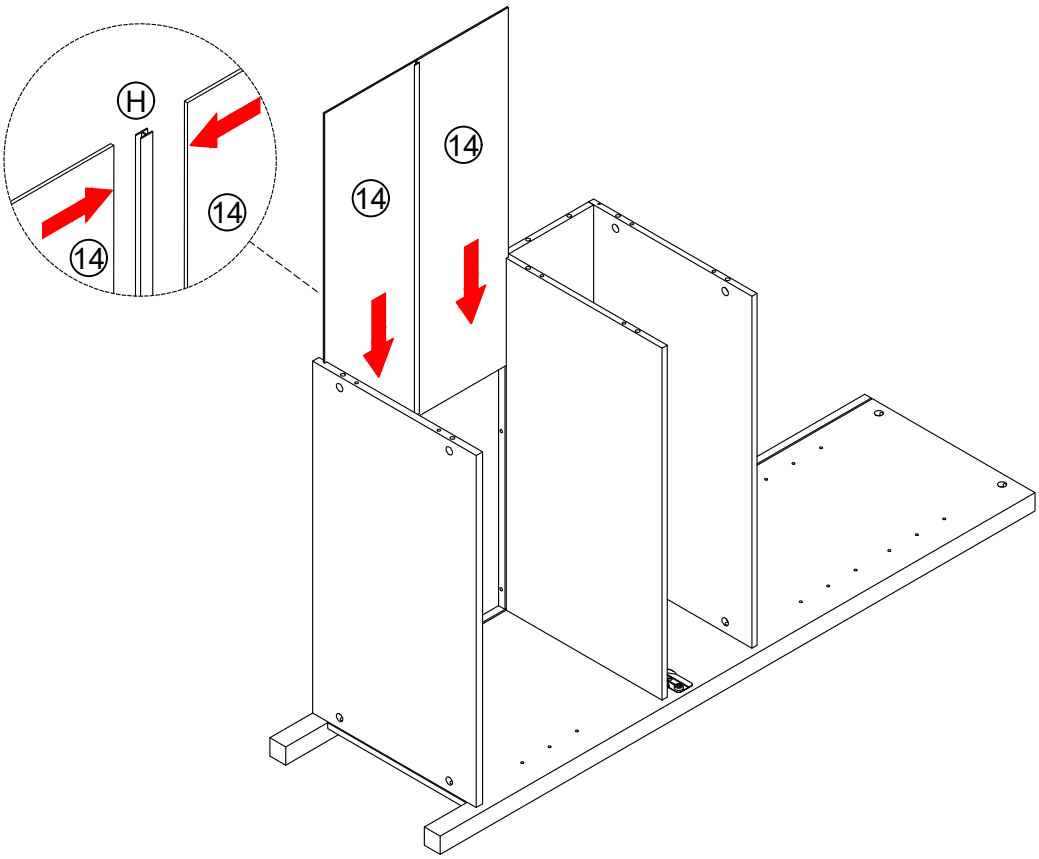

All rights reserved.

STEP5

Ⓑ* 8 Ⓒ* 6



Tools Required

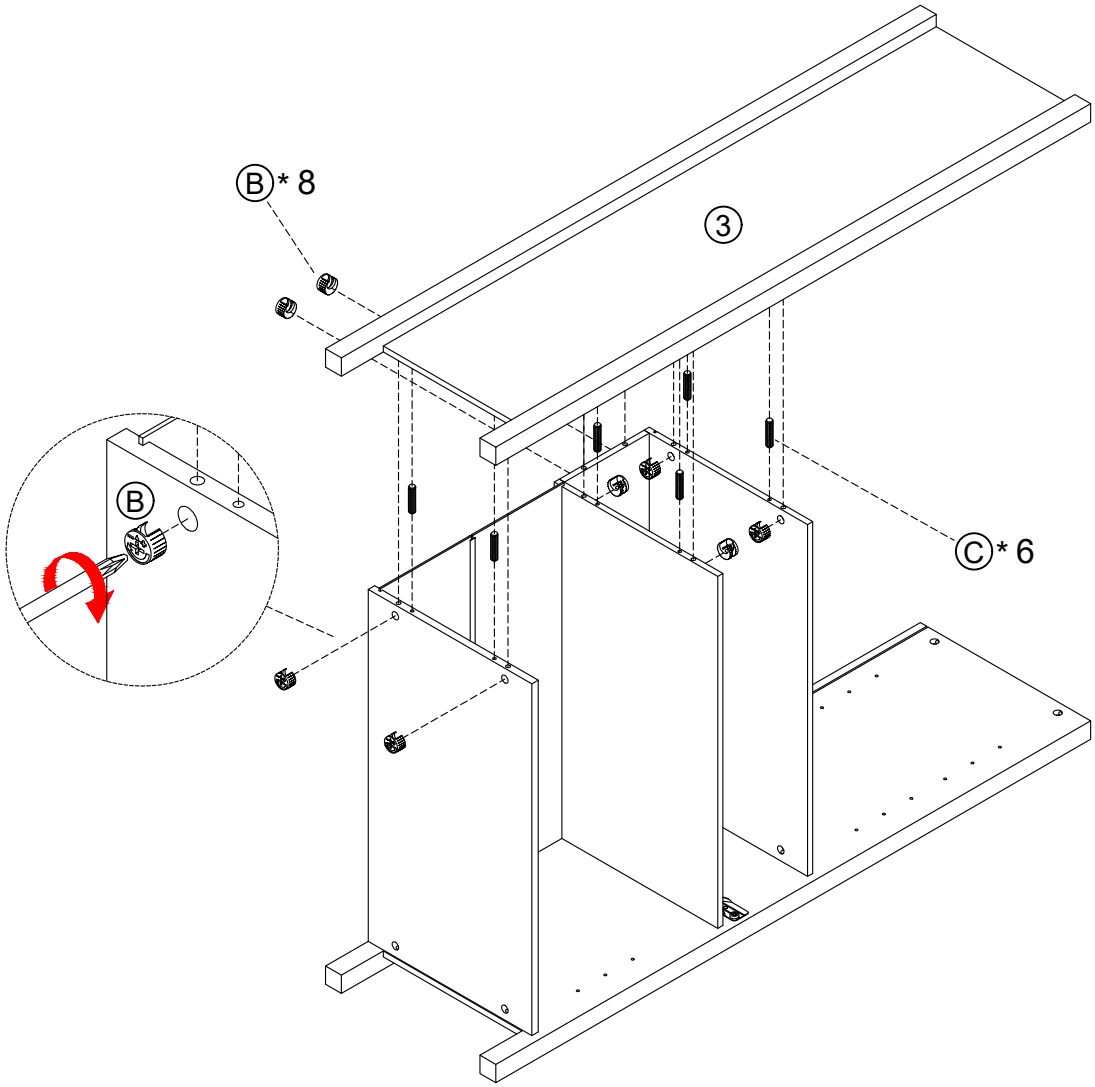

All rights reserved.

STEP6

⑬* 1 ㉓* 1 Ⓗ* 1

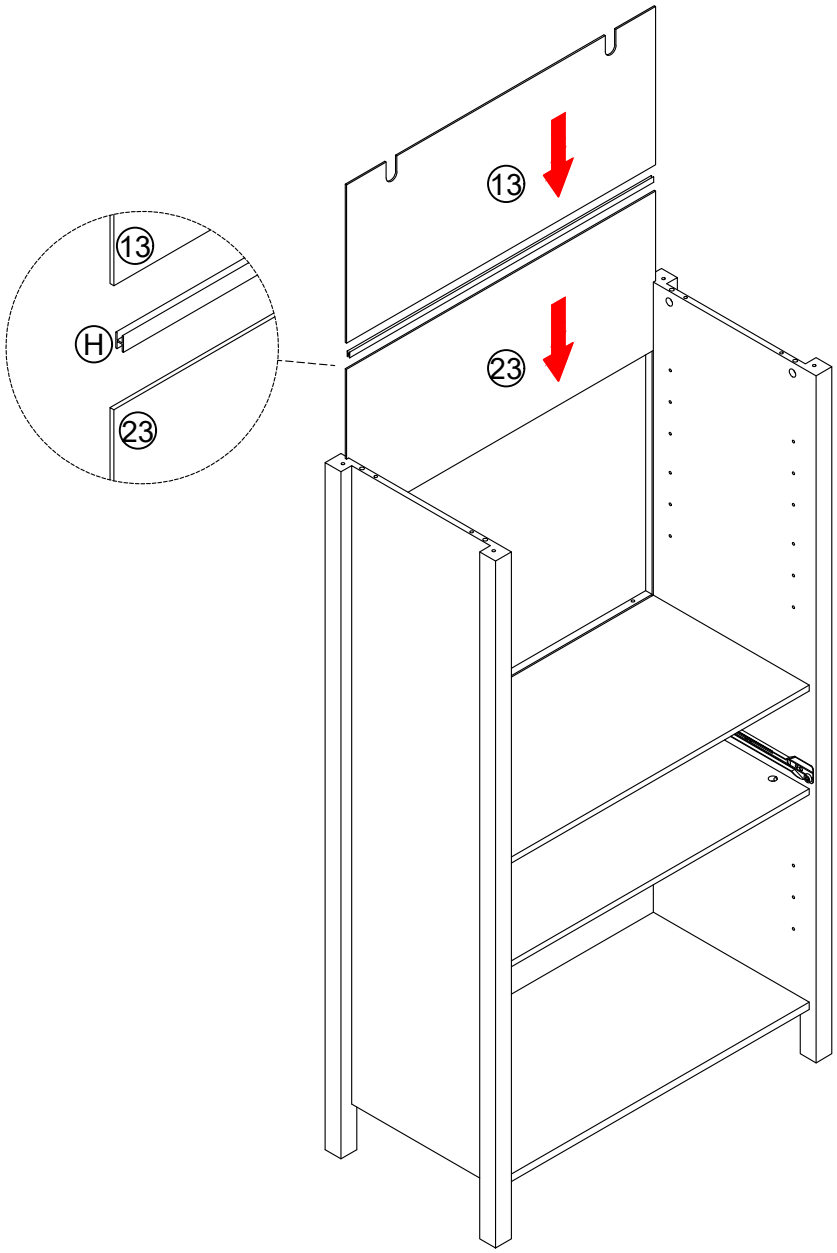

All rights reserved.

STEP7

⑤* 1 ⑥* 1 Ⓐ* 12



Tools Required

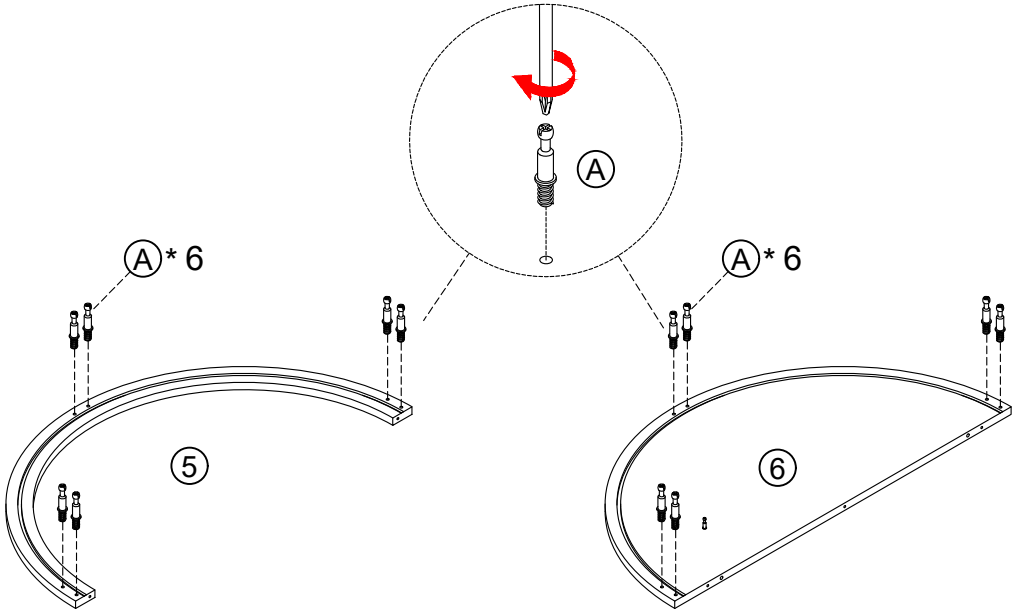

STEP8

⑦* 1 ⑧* 2 Ⓑ* 6



Tools Required

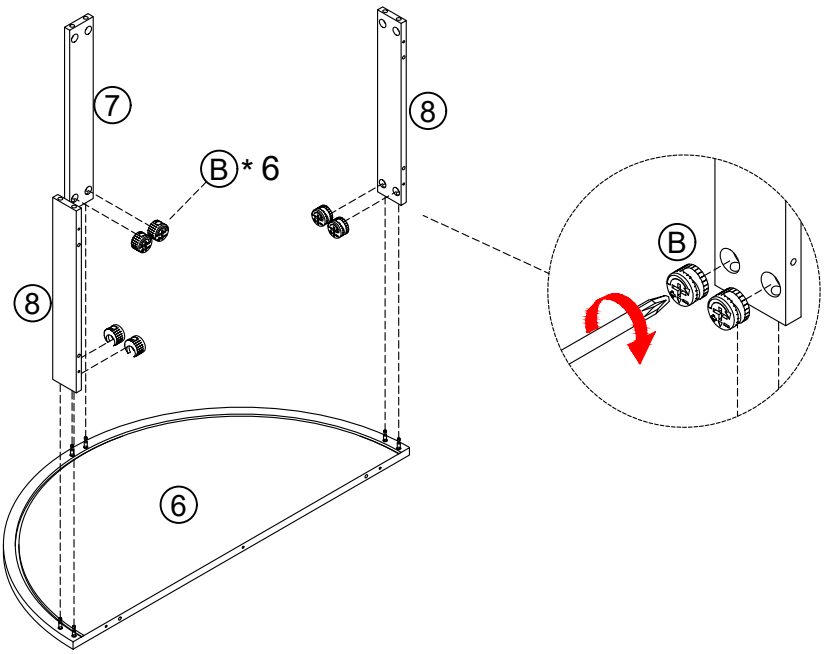

All rights reserved.

STEP9

Ⓑ* 6



Tools Required

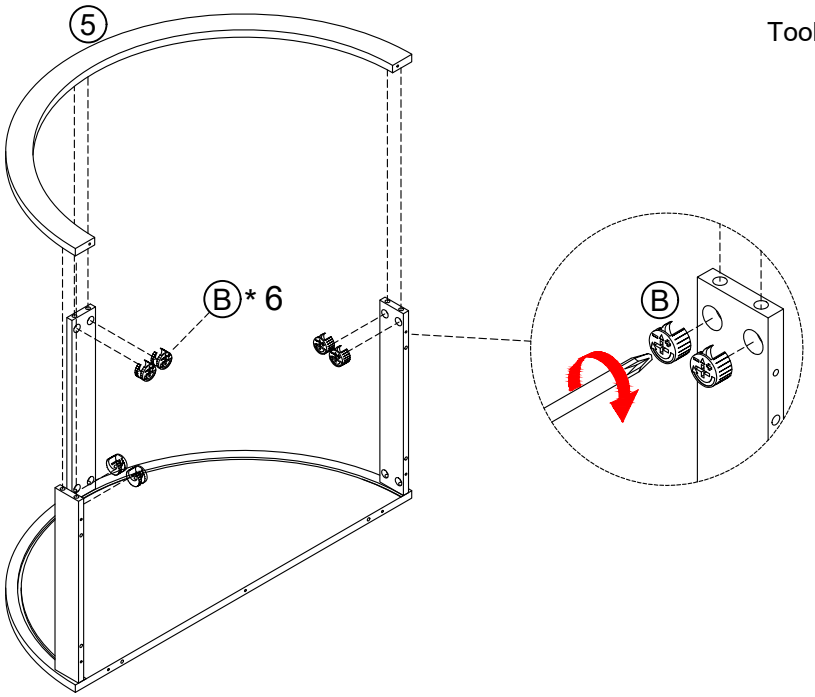

STEP10

⑨* 1

ATTENTION:

During installation, one person should secure the shelf to prevent shaking, and the other should push and pull the No. 9 plate smoothly to avoid damage or tipping of the shelf due to uneven force.

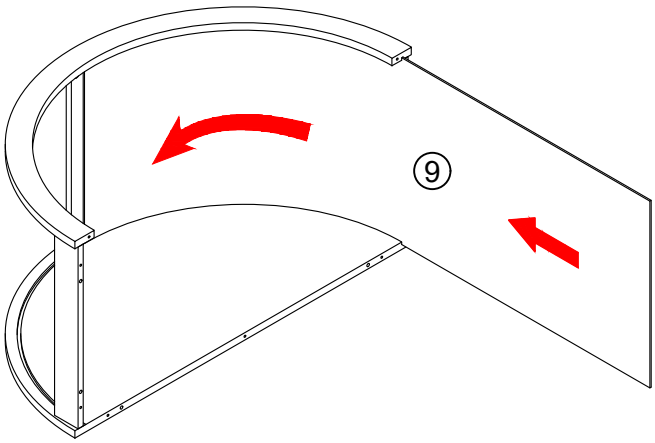

All rights reserved.

STEP11

①* 1 Ⓒ* 6 Ⓓ* 9

Ⓟ* 1

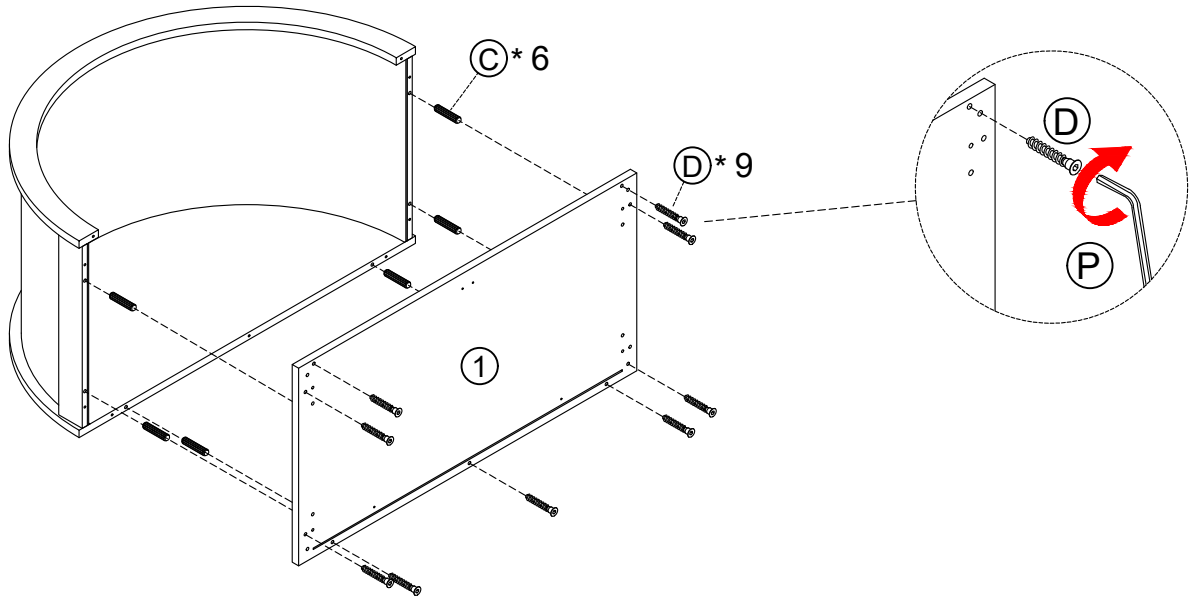

STEP12

Ⓐ* 4 Ⓔ* 2 Ⓜ* 1 R1* 2 R4* 2



Tools Required

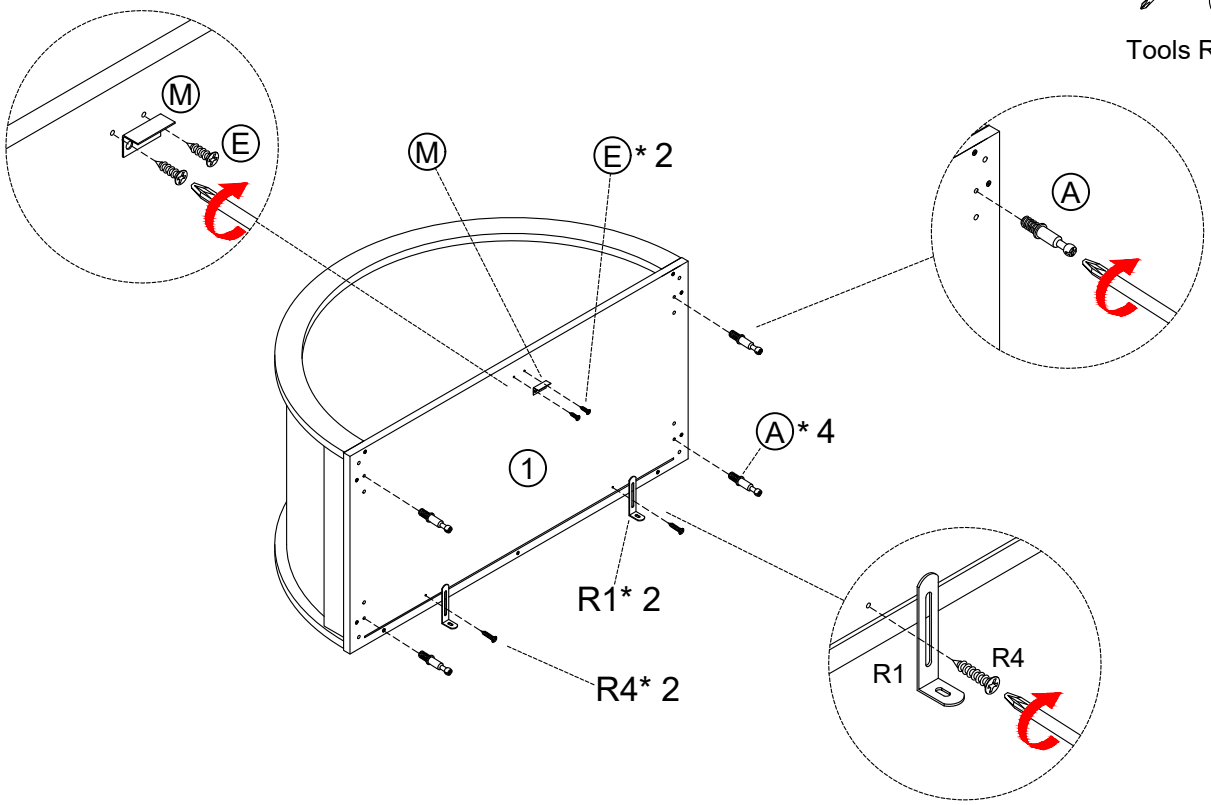

All rights reserved.

STEP13

Ⓑ* 4 Ⓒ* 8



Tools Required

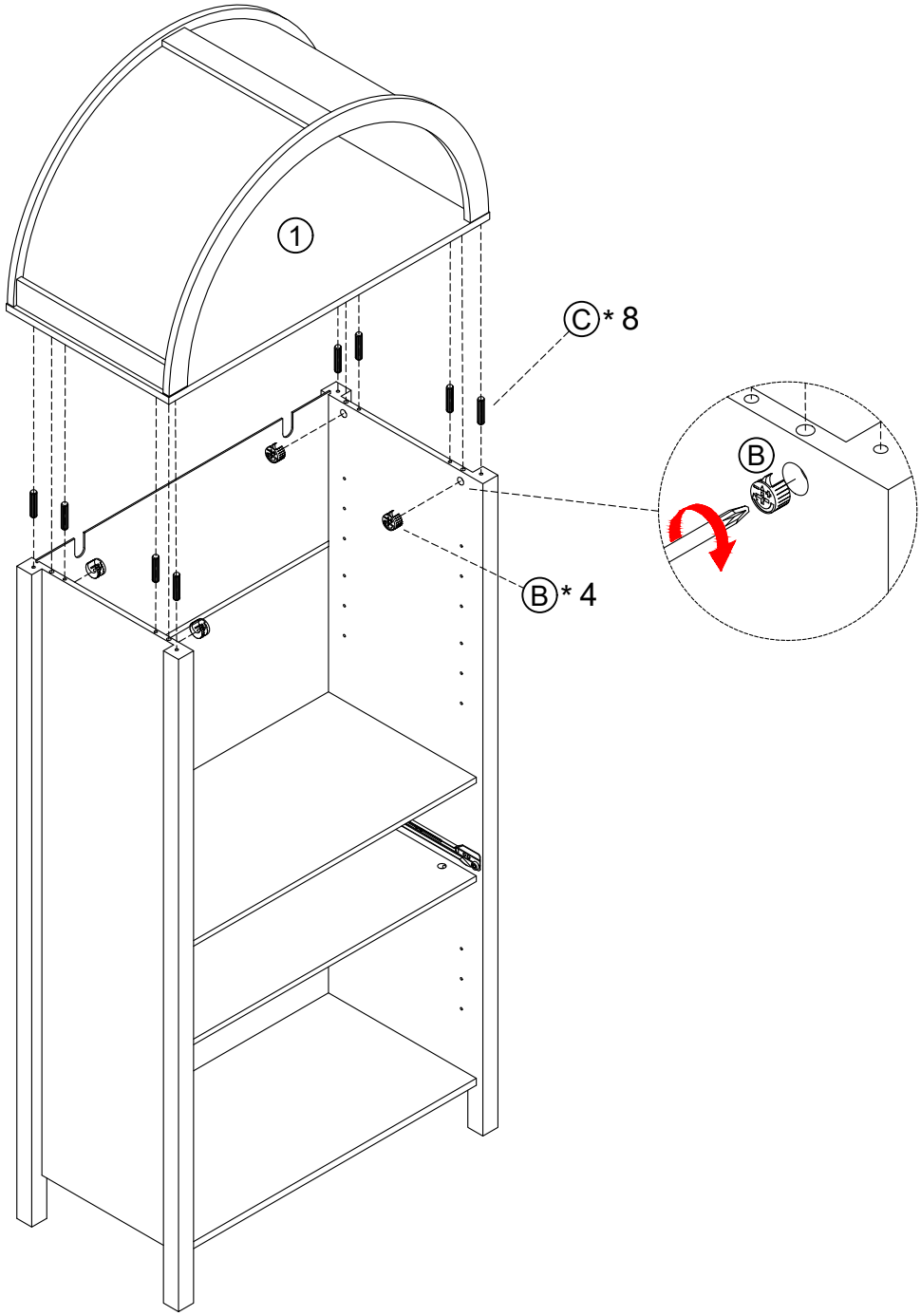

All rights reserved.

STEP14

⑮* 1	⑯* 1	⑰* 1	⑱* 1	⑲* 1	⑳* 1
Ⓐ* 5	Ⓑ* 5	Ⓛ* 5	Ⓔ* 6	DR* 1	DL* 1



Tools Required

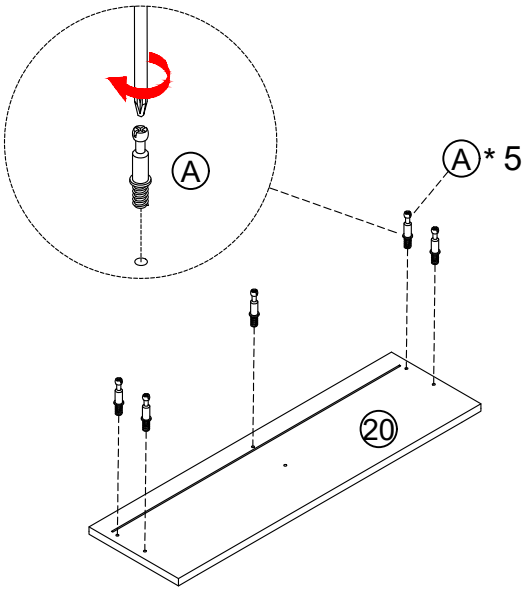

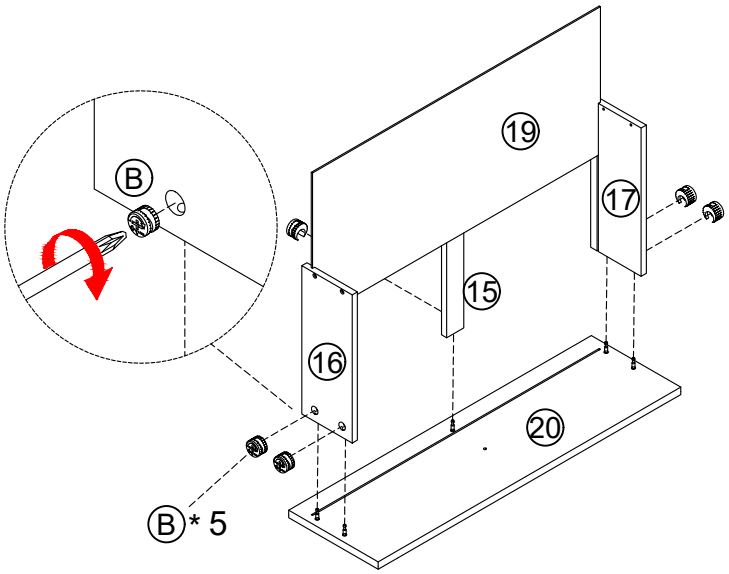

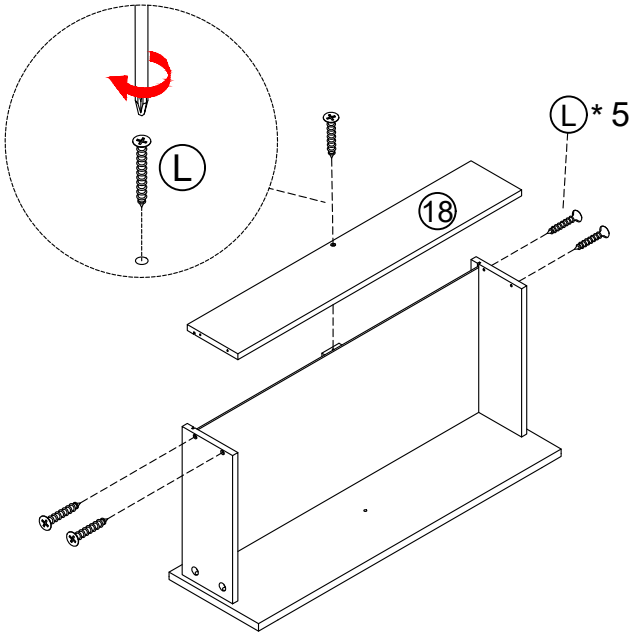

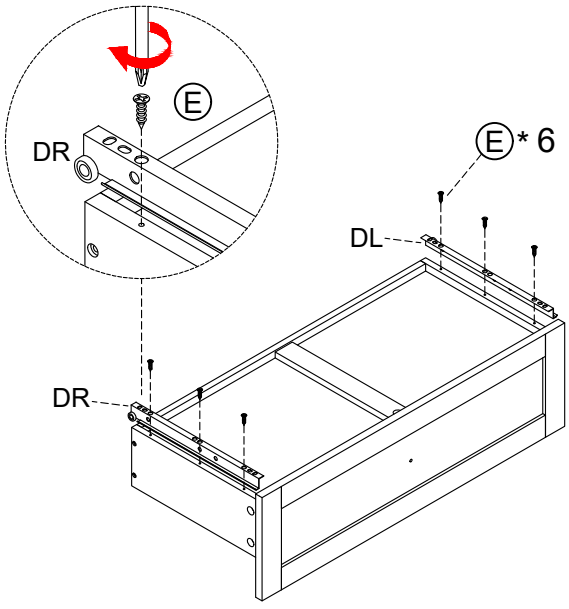

All rights reserved.

STEP15

F1* 1 F2* 1



Tools Required

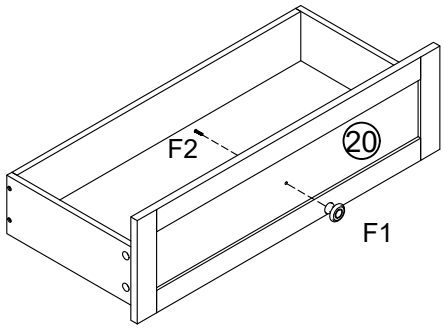

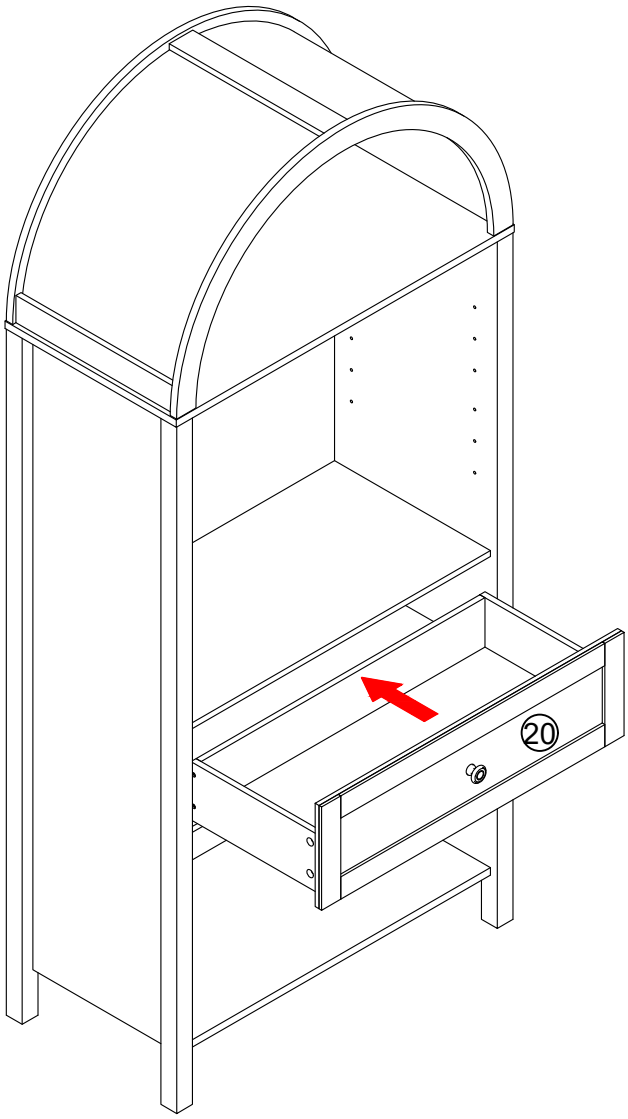

All rights reserved.

STEP16

Q1* 16 Q2* 16



Tools Required

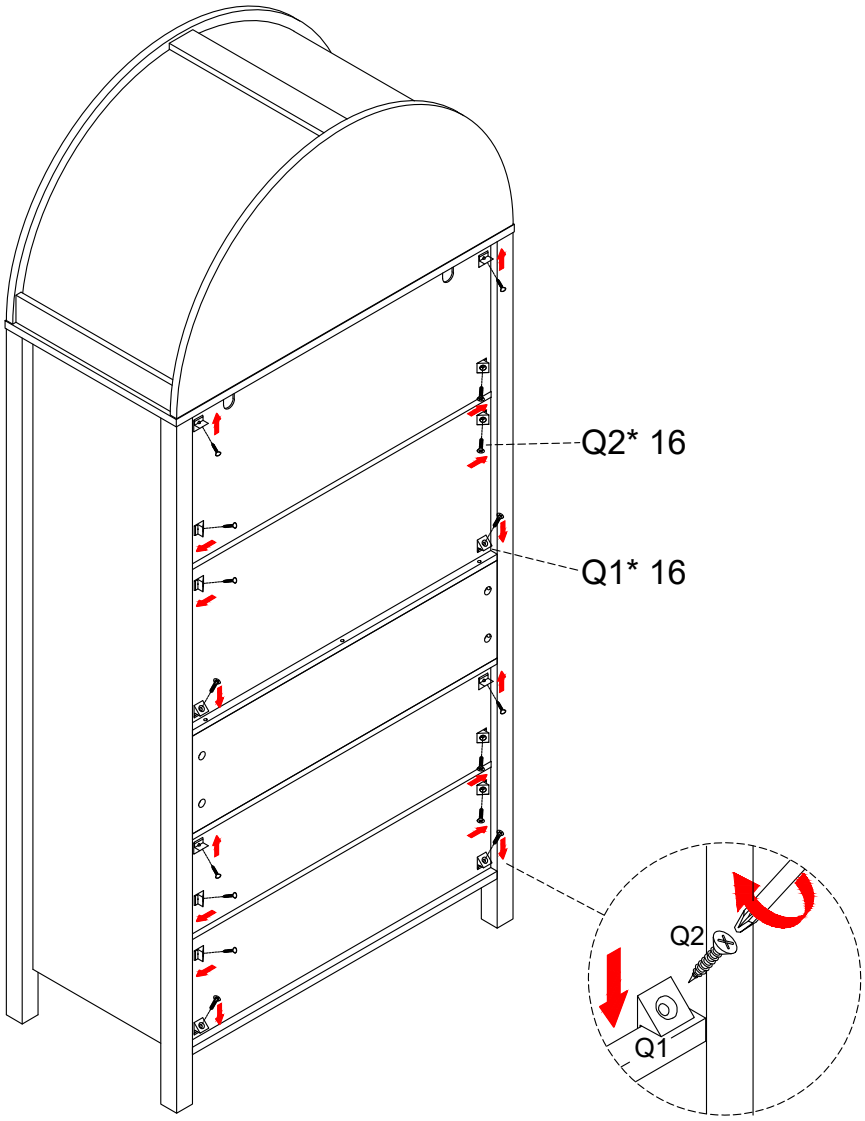

All rights reserved.

STEP17

21* 1 24* 1 G1* 4 G2* 24 F1* 2 F2* 2



Tools Required

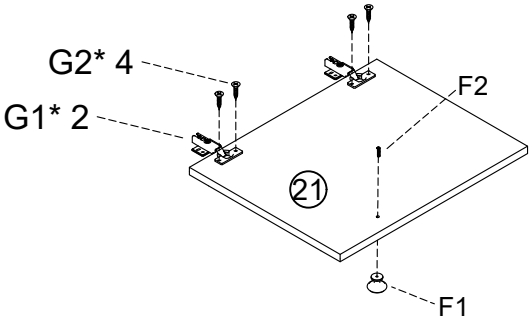

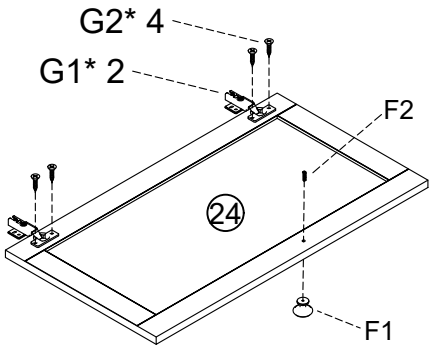

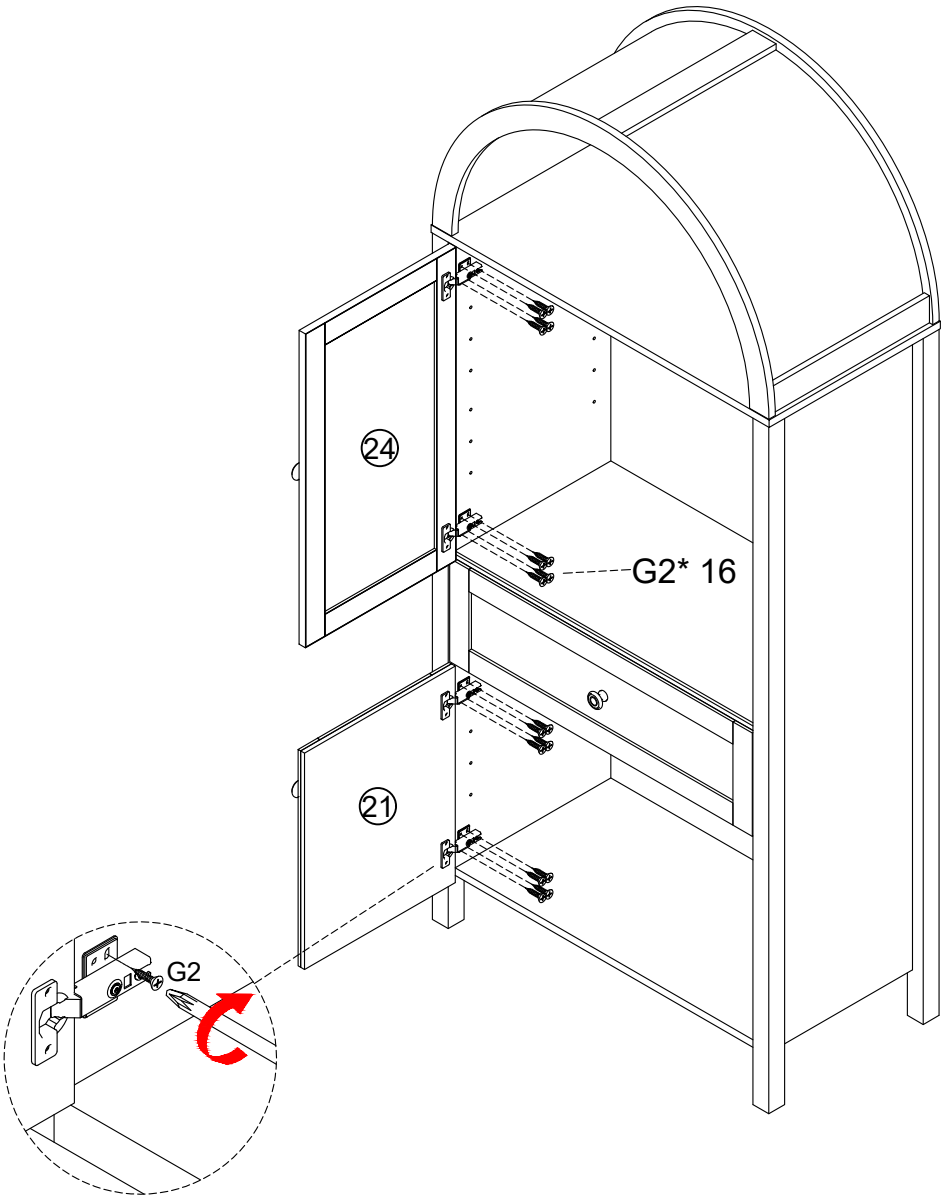

All rights reserved.

STEP18

㉒* 1 ㉕* 1 G1* 4 G2* 24 F1* 2 F2* 2



Tools Required

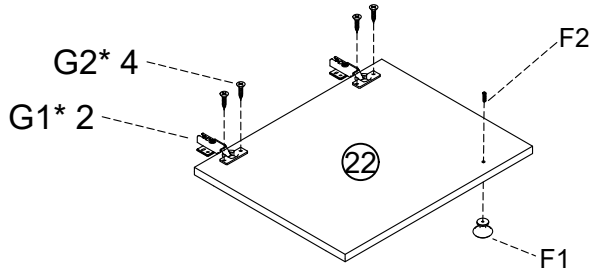

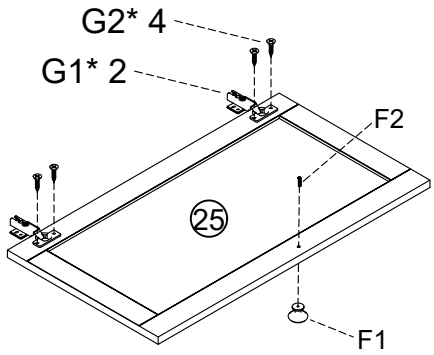

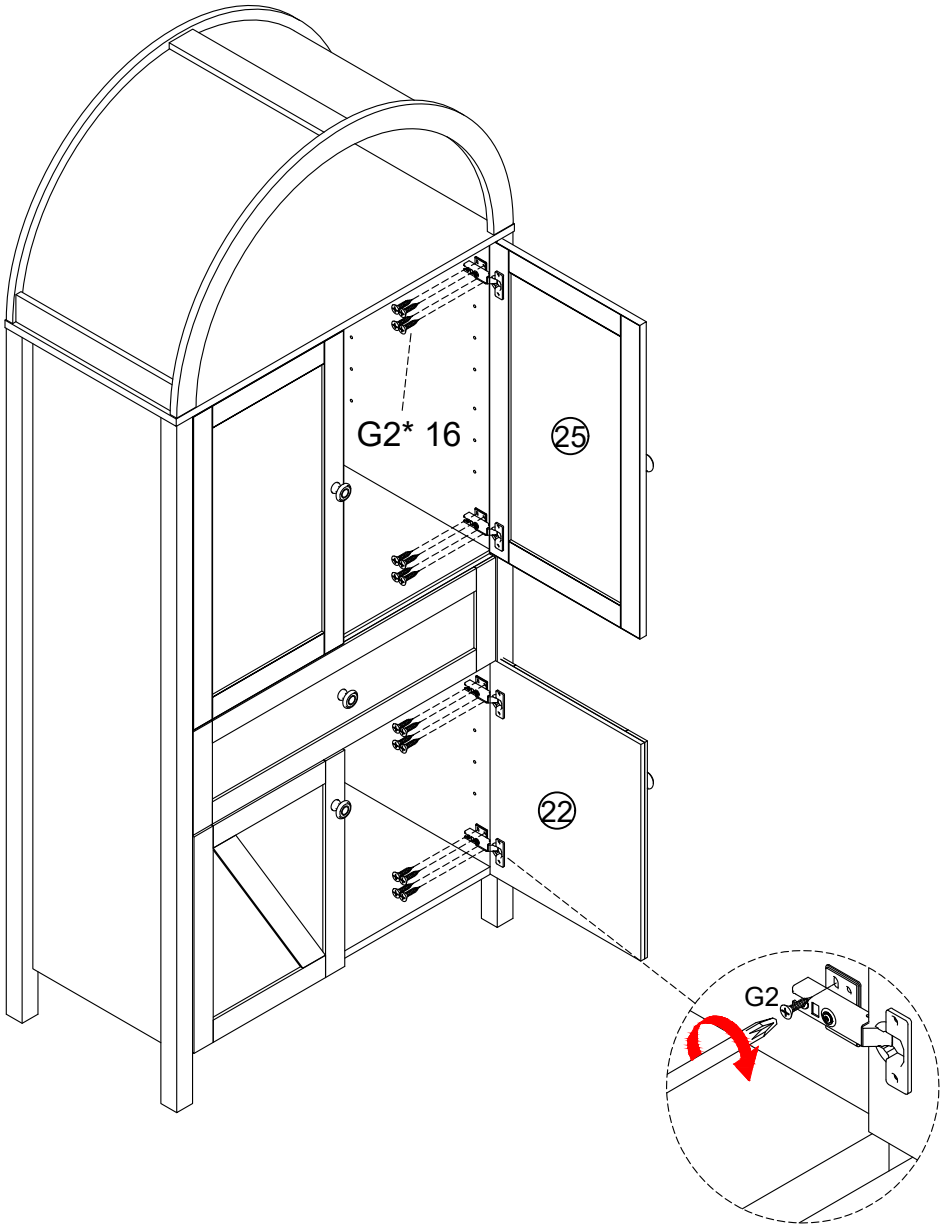

All rights reserved.

STEP19

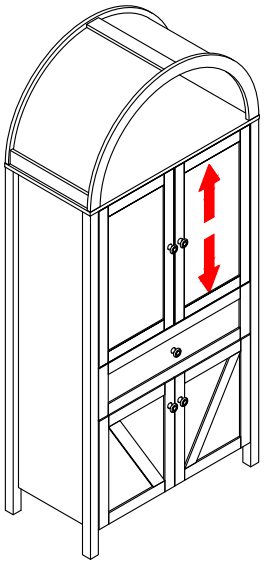

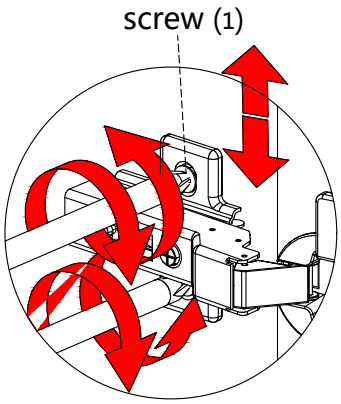

By adjusting the screw (1), and manually changing the vertical position of the cabinet door, the balance gap between the top and bottom of the cabinet can be achieved.

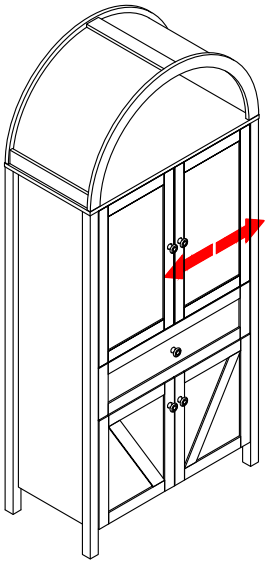

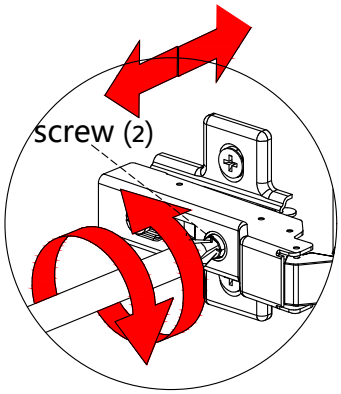

By adjusting screw (2), the left and right positions of the cabinet door can be changed to achieve a balanced door gap of left, middle and right.

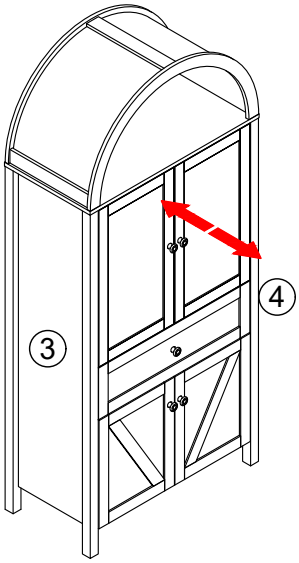

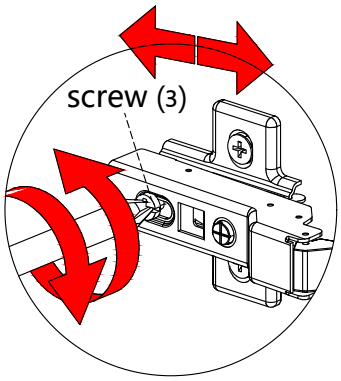

By adjusting the screw (3), the front and rear positions of the cabinet door can be changed to be flush with the side panel surface of number ③ and ④.

All rights reserved.

STEP20

R2* 2 R3* 2



Tools Required

Place the cabinet in an appropriate position and drill holes on the wall according to the location of R1.

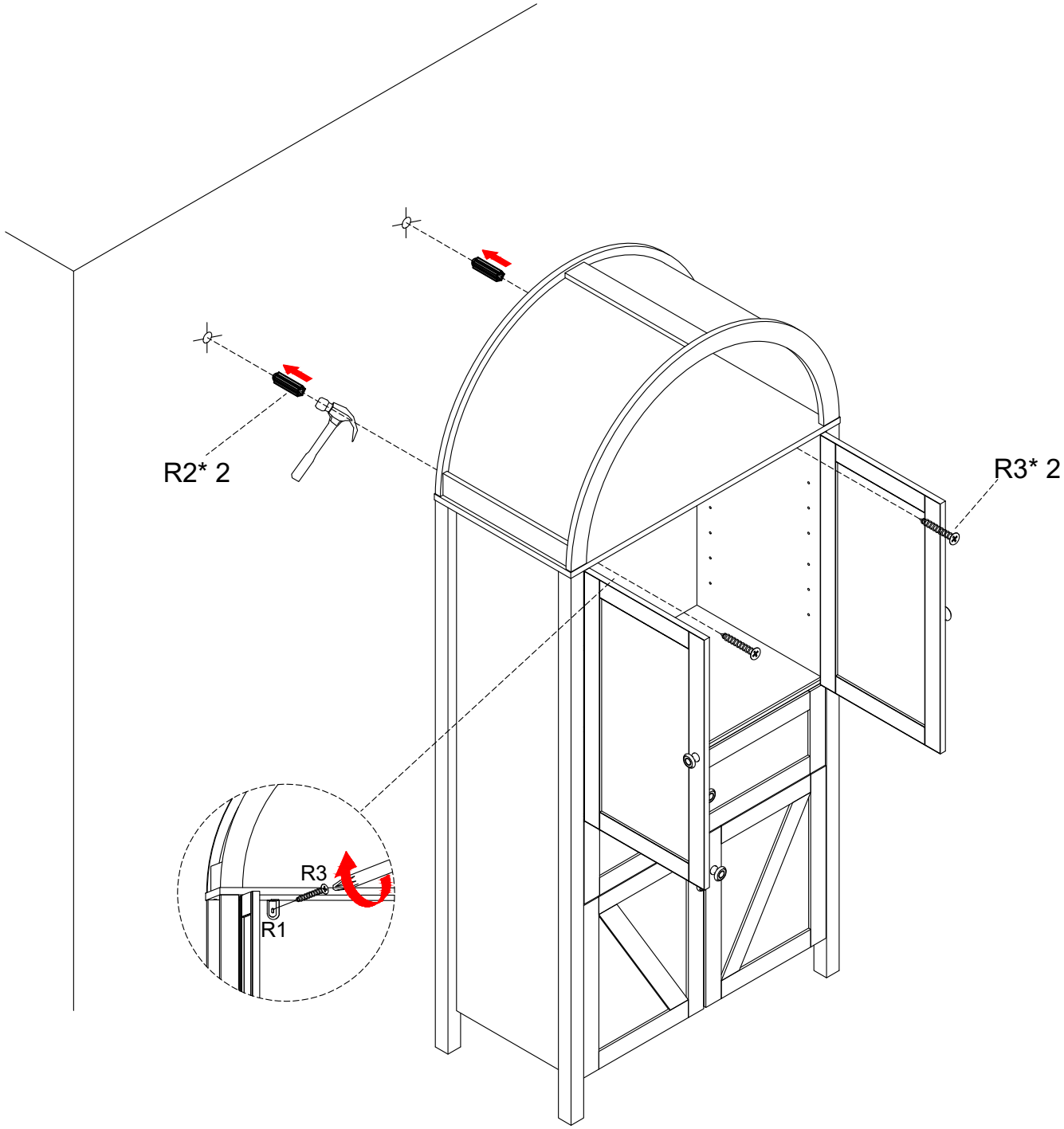

All rights reserved.

STEP21

⑩* 3 Ⓙ* 12

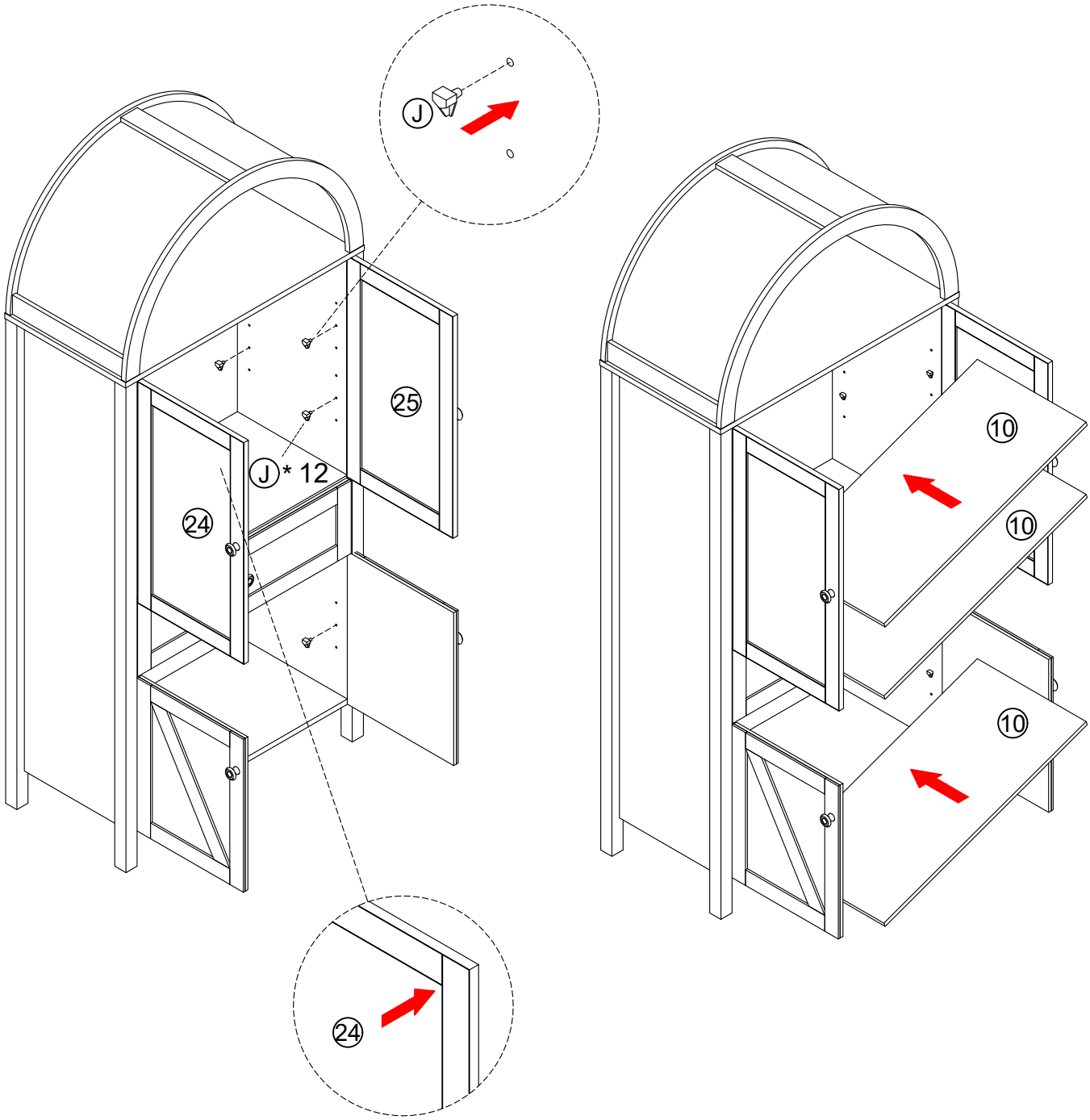

The acrylic panels embedded in Plates 24 and 25 are typically covered with protective films on both sides upon factory shipment.

It is recommended to remove the protective films in a clean, dust-free environment to avoid re-contaminating the surface after removal.

The film has been cut open around the inner edge of the door frame and the acrylic joint. You only need to peel off the film.

Please refer to the bottom left image in the above diagram for instructions.

Final Assembly!

All rights reserved.