Assembly Manual

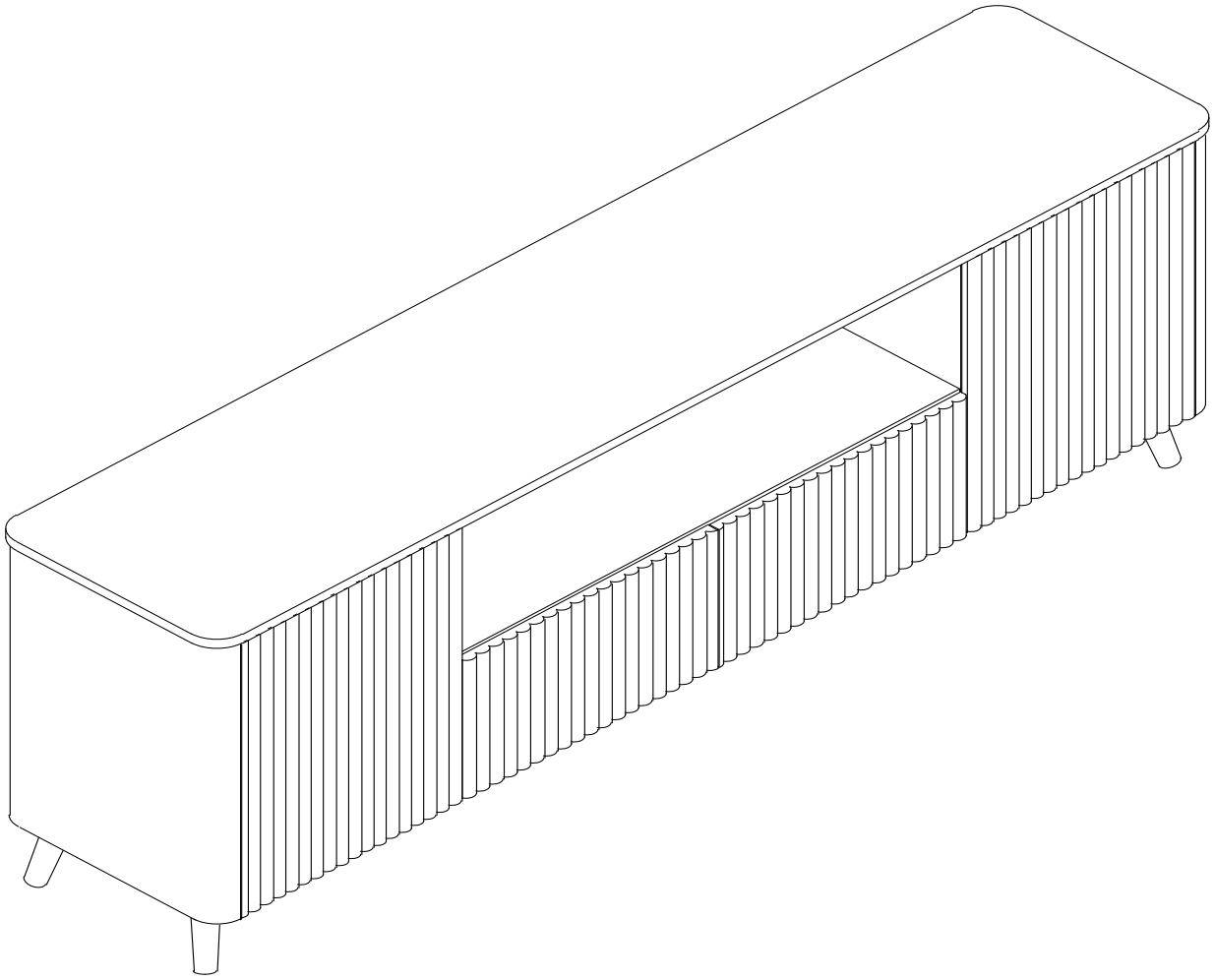

For Residential Use Only

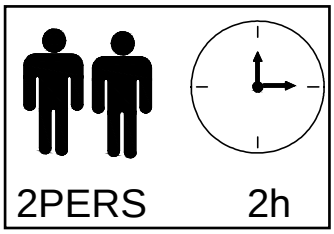

[EN]

Warning: Please read instructions fully before starting assembly.Check you have all the components and tools listed on pages.

Warning: Please place all parts on a flat surface.Place a soft blanket or similar underneath to protect against scratches or stains.Avoid dragging or sliding components across the floor.

Warning: Regularly check all fittings and fastenings to ensure they are secure and to prevent accidents.If any parts are missing, broken, damaged, or worn, discontinue use of the product until repairs have been made using factory authorized parts.

Warning: Do not allow children to climb on the furniture as this may result in tipping and serious personal injury.Assemble the furniture away from the reach of children.

Warning: Do not place furniture close to fire sources or high-temperature objects to avoid the risk of fire

Warning: Clean furniture with a damp cloth or alcohol, avoid using cleaning agents containing corrosive chemicals.

Warning: This product is equipped with an anti-tilt device. Please be sure to install this device to prevent unnecessary injuries caused by tipping.

[DE]

Warnung: Lesen Sie die Anleitung vor dem Zusammenbau bitte vollständig durch. Überprüfen Sie, ob Sie alle auf den Seiten aufgeführten Komponenten und Werkzeuge haben.

Warnung: Legen Sie alle Teile auf eine ebene Fläche. Legen Sie eine weiche Decke oder Ähnliches darunter, um sie vor Kratzern oder Flecken zu schützen. Vermeiden Sie es, Komponenten über den Boden zu ziehen oder zu schieben.

Warnung: Überprüfen Sie regelmäßig alle Beschläge und Befestigungen, um sicherzustellen, dass sie sicher sind und um Unfälle zu vermeiden. Wenn Teile fehlen, kaputt, beschädigt oder abgenutzt sind, verwenden Sie das Produkt nicht weiter, bis es mit vom Hersteller autorisierten Teilen repariert wurde.

Warnung: Lassen Sie Kinder nicht auf die Möbel klettern, da dies zum Umkippen und zu schweren Verletzungen führen kann. Bauen Sie die Möbel außerhalb der Reichweite von Kindern zusammen.

Warnung: Stellen Sie die Möbel nicht in die Nähe von Feuerquellen oder heißen Gegenständen, um Brandgefahr zu vermeiden.

Warnung: Reinigen Sie die Möbel mit einem feuchten Tuch oder Alkohol. Verwenden Sie keine Reinigungsmittel mit ätzenden Chemikalien.

Warnung: Dieses Produkt ist mit einer Kippschutzvorrichtung ausgestattet. Bitte installieren Sie diese Vorrichtung unbedingt, um unnötige Verletzungen durch Umkippen zu vermeiden.

[FR]

Avertissement : Veuillez lire entièrement les instructions avant de commencer l'assemblage. Vérifiez que vous disposez de tous les composants et outils répertoriés sur les pages.

Avertissement : Veuillez placer toutes les pièces sur une surface plane. Placez une couverture douce ou similaire en dessous pour les protéger des rayures ou des taches. Évitez de faire glisser les composants sur le sol.

Avertissement : Vérifiez régulièrement tous les raccords et fixations pour vous assurer qu'ils sont bien fixés et pour éviter les accidents. Si des pièces manquent, sont cassées, endommagées ou usées, cessez d'utiliser le produit jusqu'à ce que des réparations aient été effectuées à l'aide de pièces autorisées par l'usine.

Avertissement : Ne laissez pas les enfants grimper sur les meubles car cela pourrait entraîner un basculement et des blessures graves. Assemblez les meubles hors de portée des enfants.

Avertissement : Ne placez pas les meubles à proximité de sources de feu ou d'objets à haute température pour

éviter tout risque d'incendie.
Avertissement : Nettoyez les meubles avec un chiffon humide ou de l'alcool, évitez d'utiliser des produits de nettoyage contenant des produits chimiques corrosifs.
Avertissement : Ce produit est équipé d'un dispositif anti-basculement. Assurez-vous d'installer ce dispositif pour éviter les blessures inutiles causées par un basculement.

[IT]
Attenzione: leggere attentamente le istruzioni prima di iniziare il montaggio. Verificare di avere tutti i componenti e gli strumenti elencati nelle pagine.
Attenzione: posizionare tutte le parti su una superficie piana. Posizionare una coperta morbida o simile sotto per proteggere da graffi o macchie. Evitare di trascinare o far scivolare i componenti sul pavimento.
Attenzione: controllare regolarmente tutti i raccordi e i dispositivi di fissaggio per assicurarsi che siano sicuri e per prevenire incidenti. Se alcune parti sono mancanti, rotte, danneggiate o usurate, interrompere l'uso del prodotto fino a quando non siano state eseguite le riparazioni utilizzando parti autorizzate dalla fabbrica.
Attenzione: non consentire ai bambini di arrampicarsi sui mobili poiché ciò potrebbe causare ribaltamenti e gravi lesioni personali. Montare i mobili lontano dalla portata dei bambini.
Attenzione: non posizionare i mobili vicino a fonti di fuoco o oggetti ad alta temperatura per evitare il rischio di incendio
Attenzione: pulire i mobili con un panno umido o alcol, evitare di utilizzare detergenti contenenti sostanze chimiche corrosive.
Attenzione: questo prodotto è dotato di un dispositivo antiribaltamento. Assicurarsi di installare questo dispositivo per prevenire lesioni inutili causate dal ribaltamento.

[ES]
Advertencia: Lea las instrucciones completamente antes de comenzar el montaje. Compruebe que tiene todos los componentes y herramientas que se enumeran en las páginas.
Advertencia: Coloque todas las piezas sobre una superficie plana. Coloque una manta suave o algo similar debajo para protegerlas de rayones o manchas. Evite arrastrar o deslizar los componentes por el piso.
Advertencia: Verifique regularmente todos los accesorios y fijaciones para asegurarse de que estén seguros y evitar accidentes. Si falta alguna pieza, está rota, dañada o desgastada, deje de usar el producto hasta que se hayan realizado las reparaciones con piezas autorizadas de fábrica.
Advertencia: No permita que los niños se suban a los muebles, ya que esto puede provocar que se vuelquen y lesiones personales graves. Monte los muebles fuera del alcance de los niños.
Advertencia: No coloque los muebles cerca de fuentes de fuego u objetos de alta temperatura para evitar el riesgo de incendio.
Advertencia: Limpie los muebles con un paño húmedo o alcohol, evite usar agentes de limpieza que contengan químicos corrosivos.
Advertencia: Este producto está equipado con un dispositivo antivuelco. Asegúrese de instalar este dispositivo para evitar lesiones innecesarias causadas por vuelcos.

EN
Warning: The maximum load-bearing capacity of this furniture is: 50 kg, please do not overload!
DE
Warnung: Die maximale Belastbarkeit dieses Möbels beträgt: 50 kg, bitte nicht überlasten!
FR
Avertissement : La capacité de charge maximale de ce meuble est de : 50 kg, merci de ne pas surcharger !
IT
Attenzione: la capacità di carico massima di questo mobile è: 50 kg, non sovraccaricare!
ES
Advertencia: La capacidad máxima de carga de este mueble es: 50 kg, ¡no lo sobrecargue!

Parts List

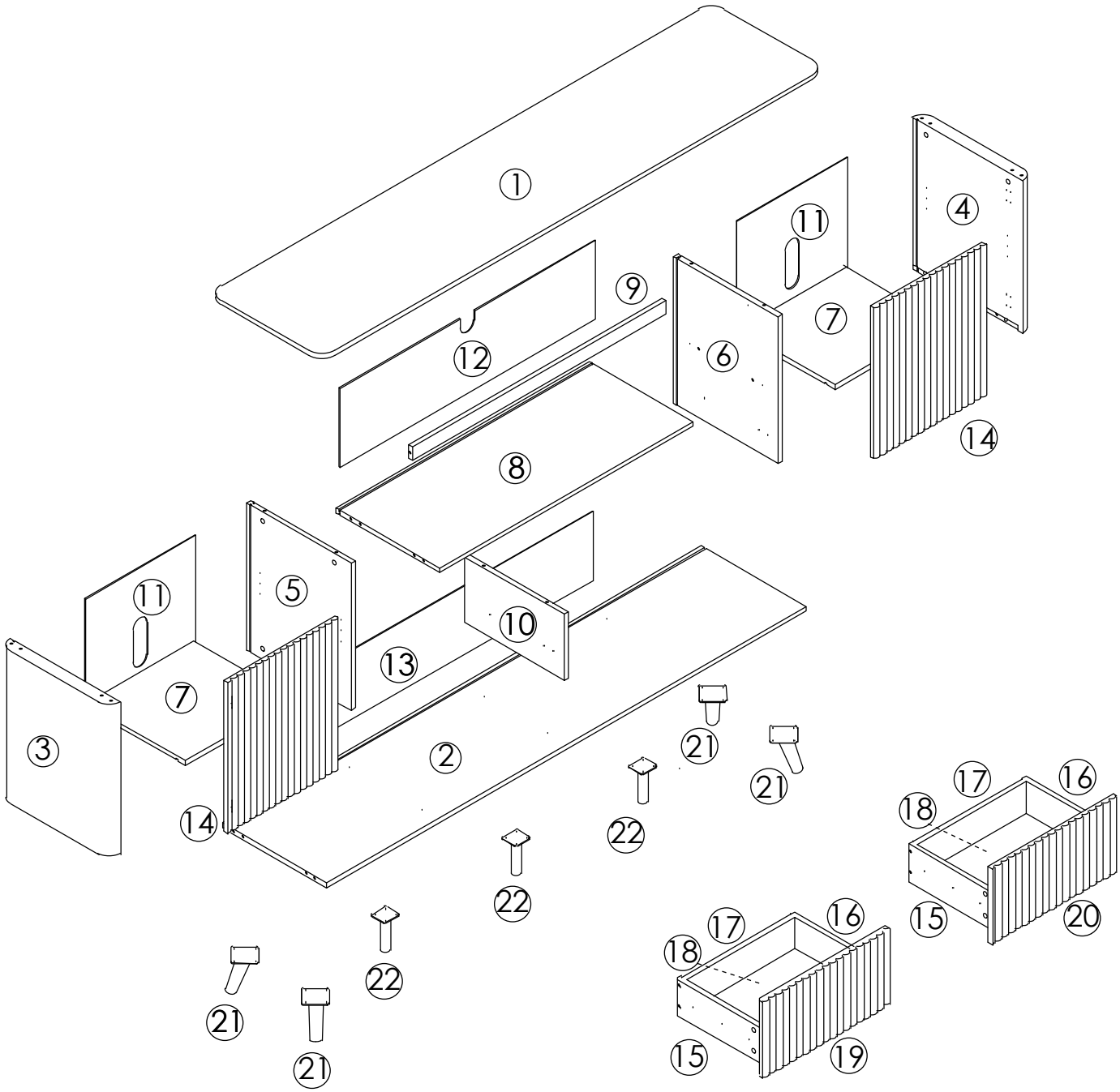
1
11
4
9
7
12
6
14
8
11
5
10
13
7
3
2
21
21
14
22
17
16
18
22
22
15
20
17
16
18
22
21
21
15
19

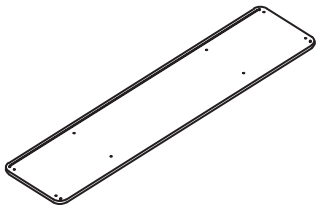

①×1

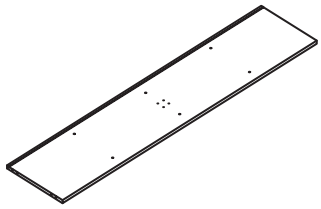

②×1

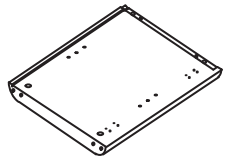

③×1

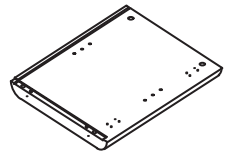

④×1

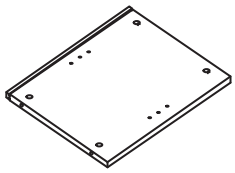

⑤×1

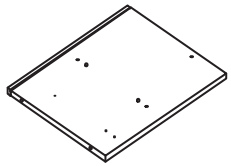

⑥×1

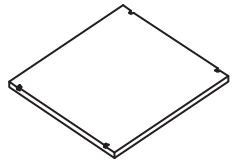

⑦×2

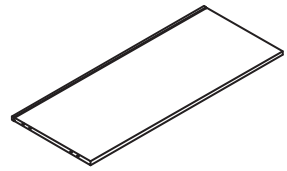

⑧×1

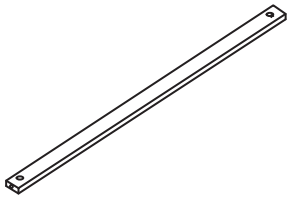

⑨×1

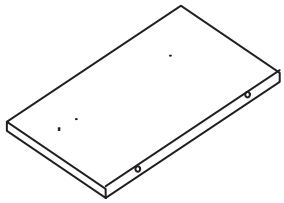

⑩ ×1

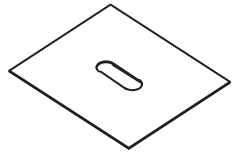

⑪ ×2

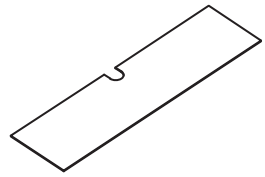

⑫ ×1

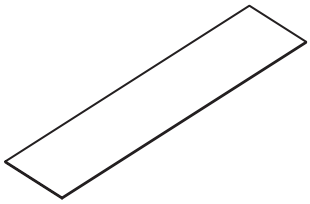

⑬ ×1

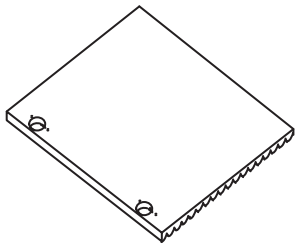

⑭ ×2

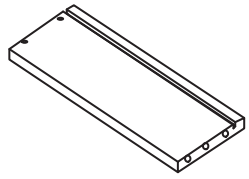

⑮ ×2

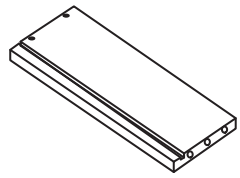

⑯ ×2

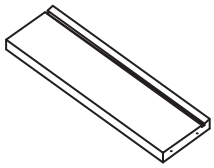

⑰ ×2

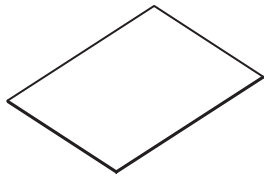

⑱ ×2

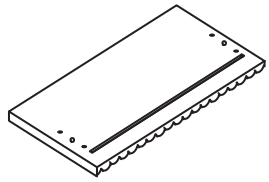

⑲ ×1

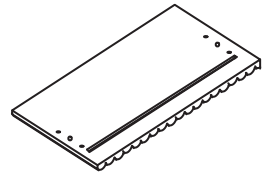

⑳ ×1

㉑ ×4

㉒ ×3

Hardware List

Ax34	Bx34	Cx16 Ø10×30	Dx2 D1 D2
Ex8 Ø3.5×35	Fx52 Ø3.5×14	Gx28 Ø4×14	Hx8
Ix8 Ø3×16	Jx34	K x8	Lx4
Tool Required Not Provided √	Use Power Tools with Caution X		

Please read through the instructions below to familiarize yourself with the parts and steps before assembly.

Use power tools with caution. You can cause cracking or damage to the material and easily strip the hardware. If you choose to use a power tool, your product will no longer be covered warranty.

1. Detach D1 from D2.

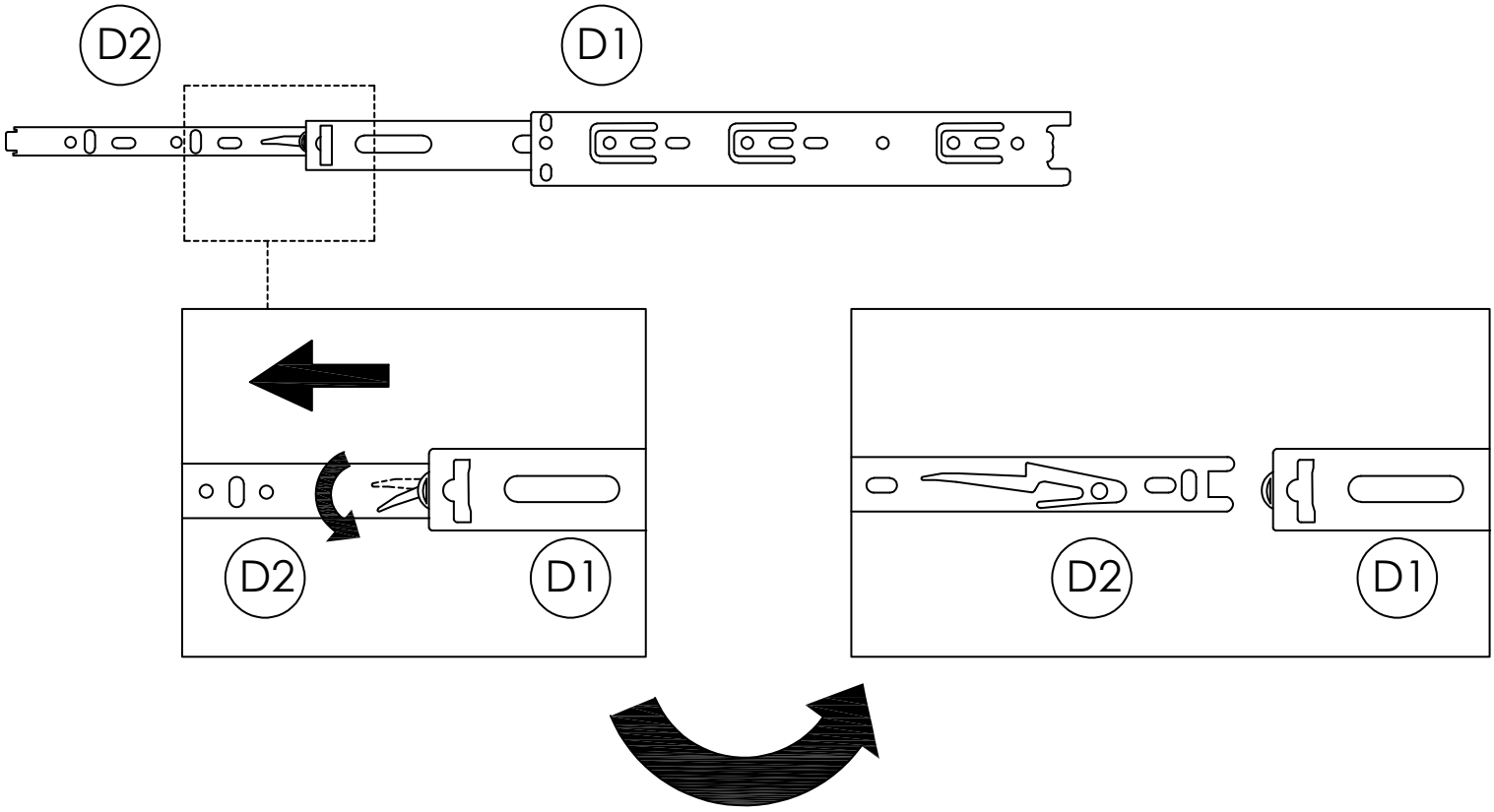

2. Attach D1 to both sides of Part10 using Screws F. Please pay attention to the Screw Point as indicated below.

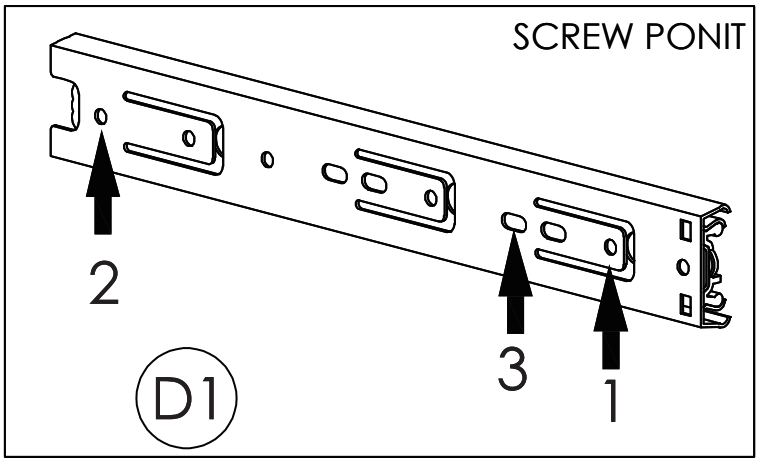

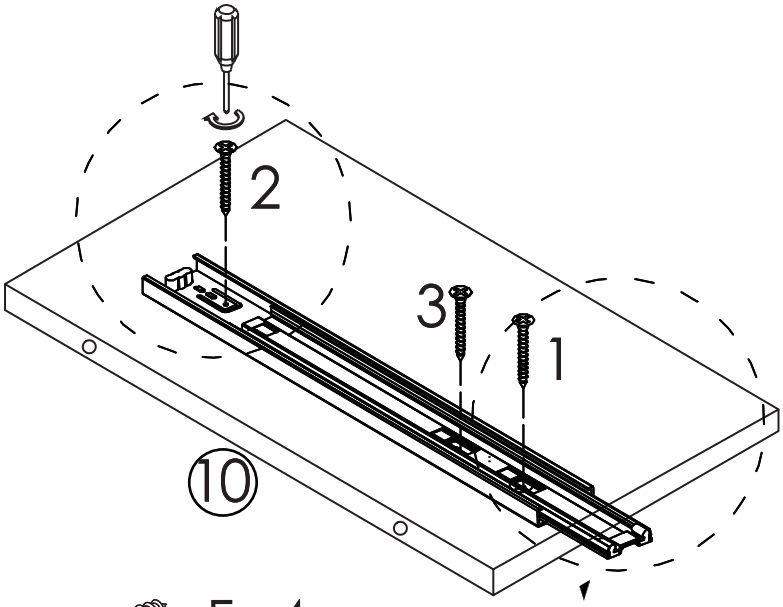

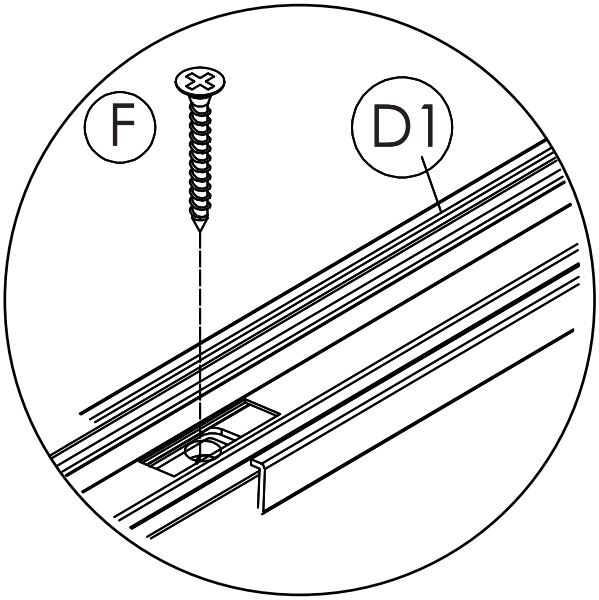

F×4

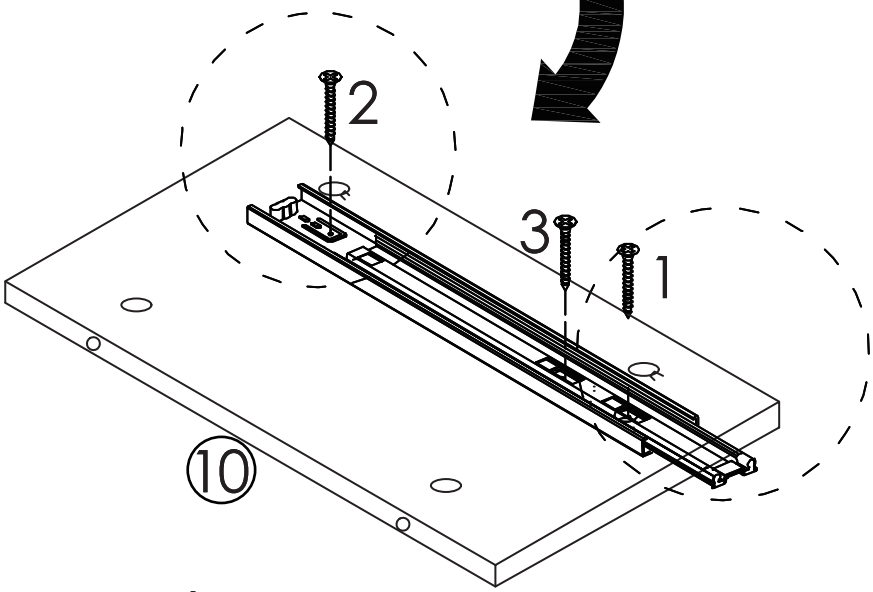

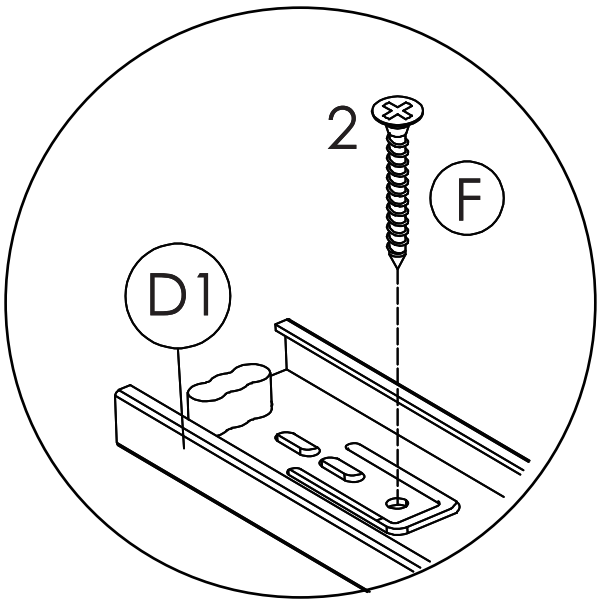

F×4

3. Screw Cam Bolts A into Part 8. Attach Part 10 to Part 8. Secure with Cam Locks B. Please pay attention to the arrow direction on Cam Locks B.

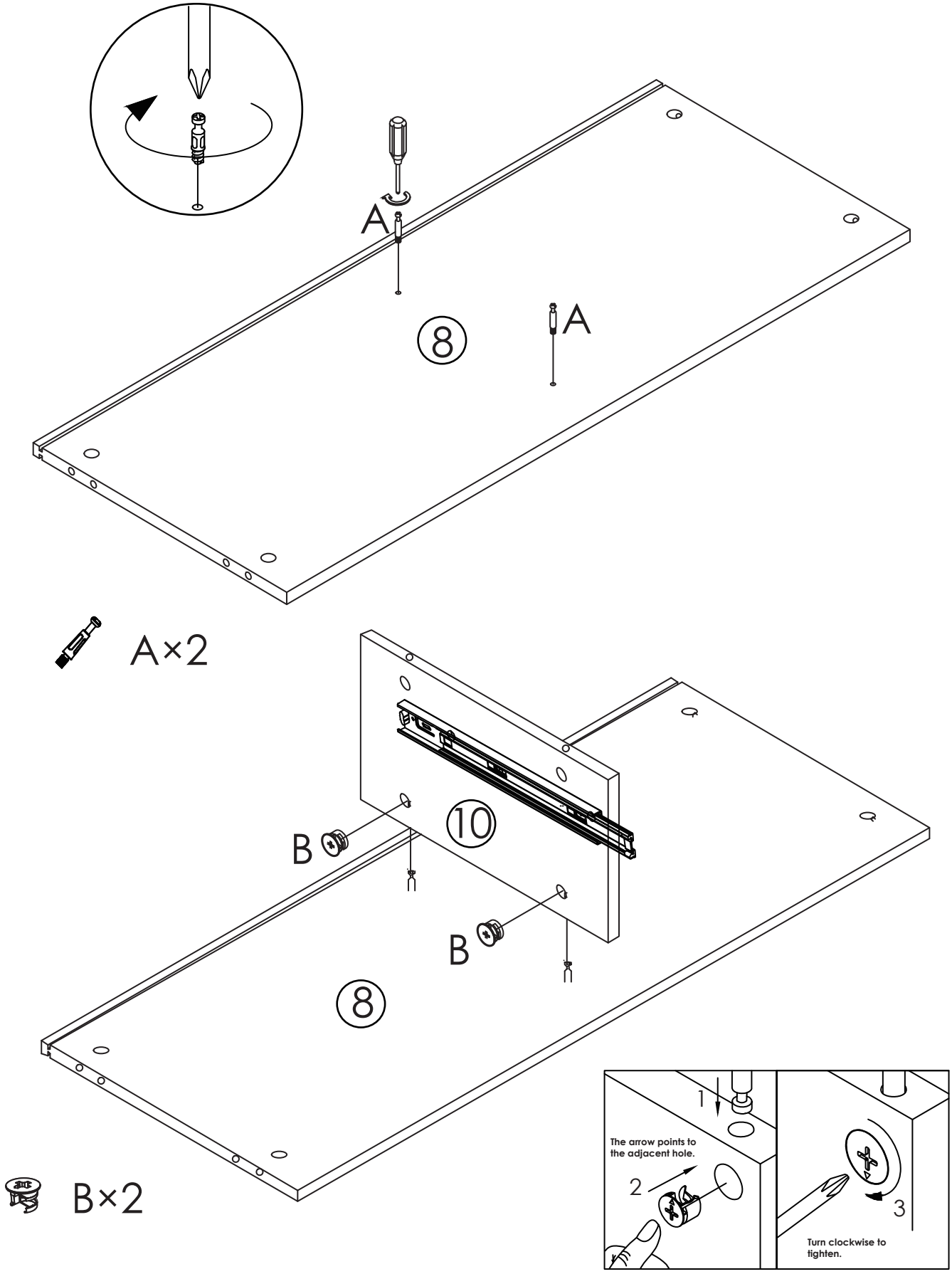

4.Attach D1 to Part 5. Screw Cam Bolts A into Part 5. Insert Dowels C into Part 5.

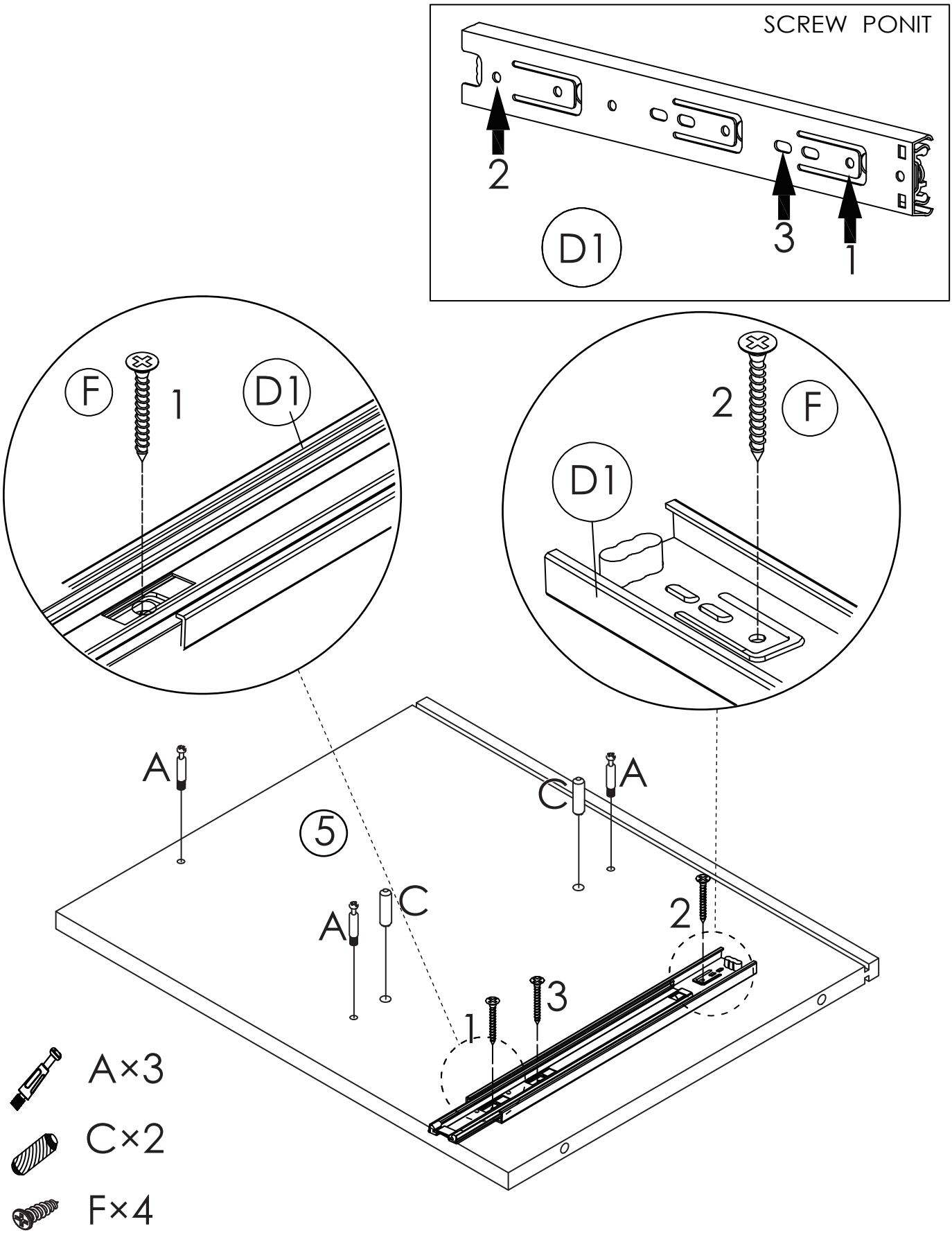

5.Attach D1 to Part 6. Screw Cam Bolts A into Part 6. Insert Dowels C into Part 6.

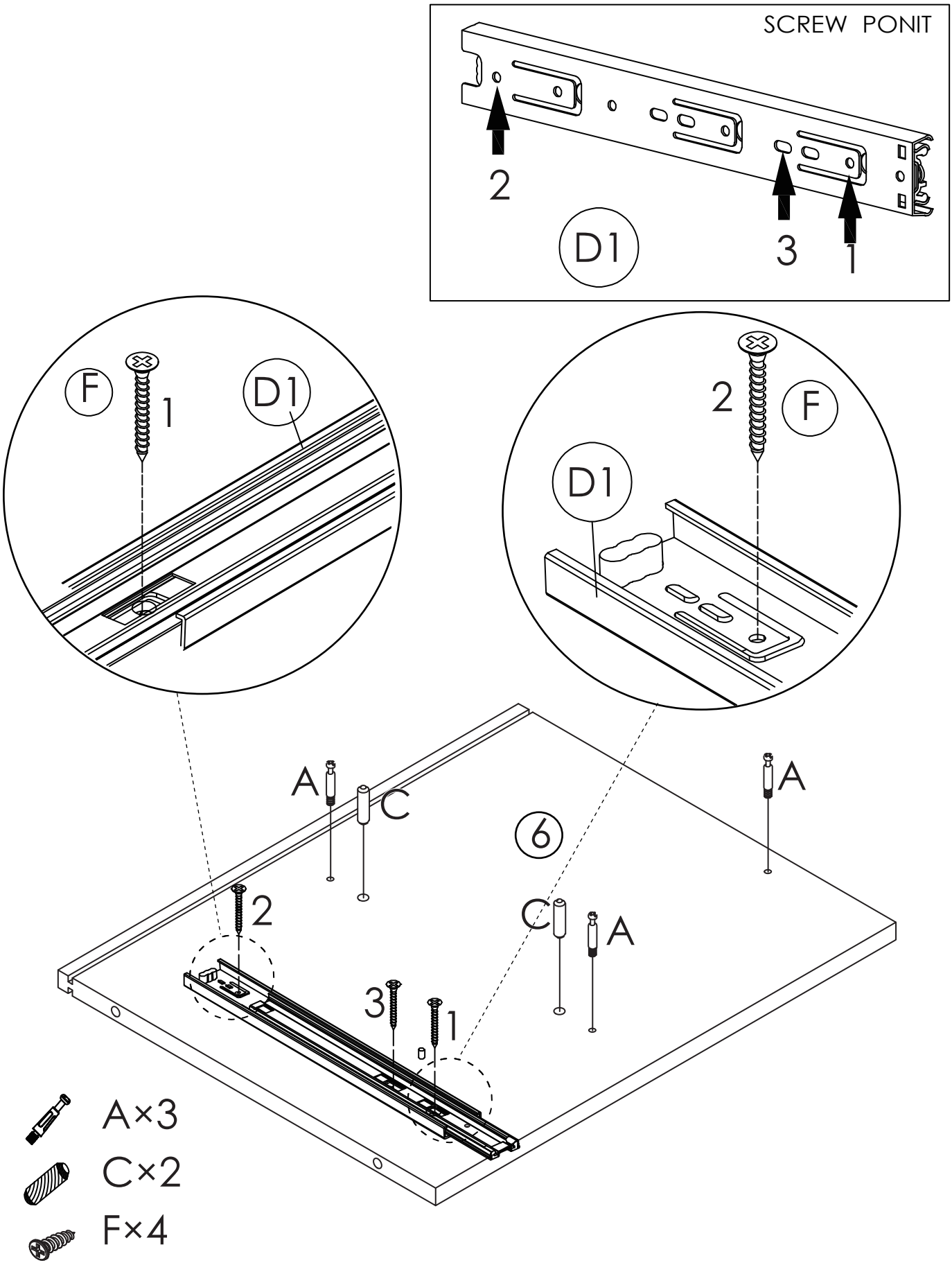

6.Attach Part 8 and Part 9 to Part 5. Secure with Cam Locks B. Please pay attention to the arrow direction on Cam Locks B.

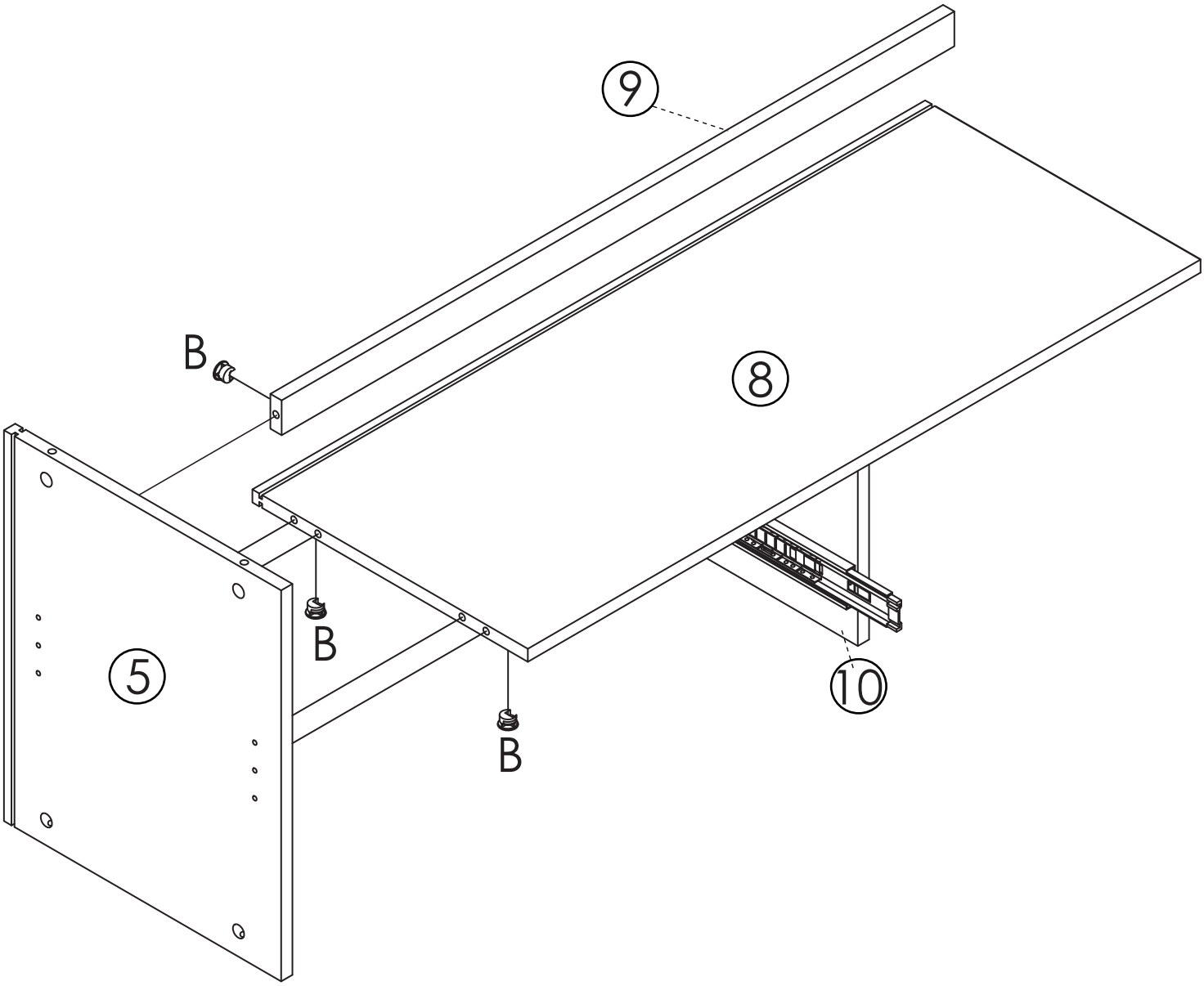

B×3

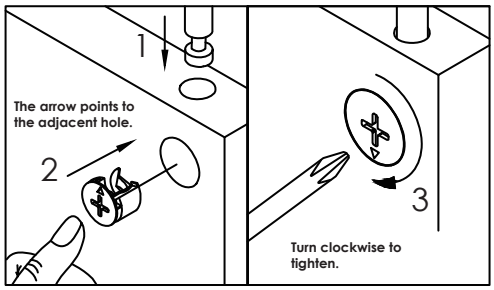

7. Attach Part 8 and Part 9 to Part 6. Secure with Cam Locks B. Please pay attention to the arrow direction on Cam Locks B.

B×3

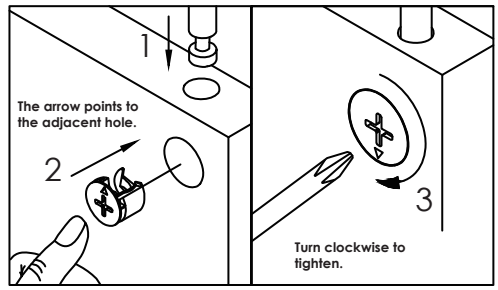

8.Insert Part 13. Use the grooves as your guides to slide into place.

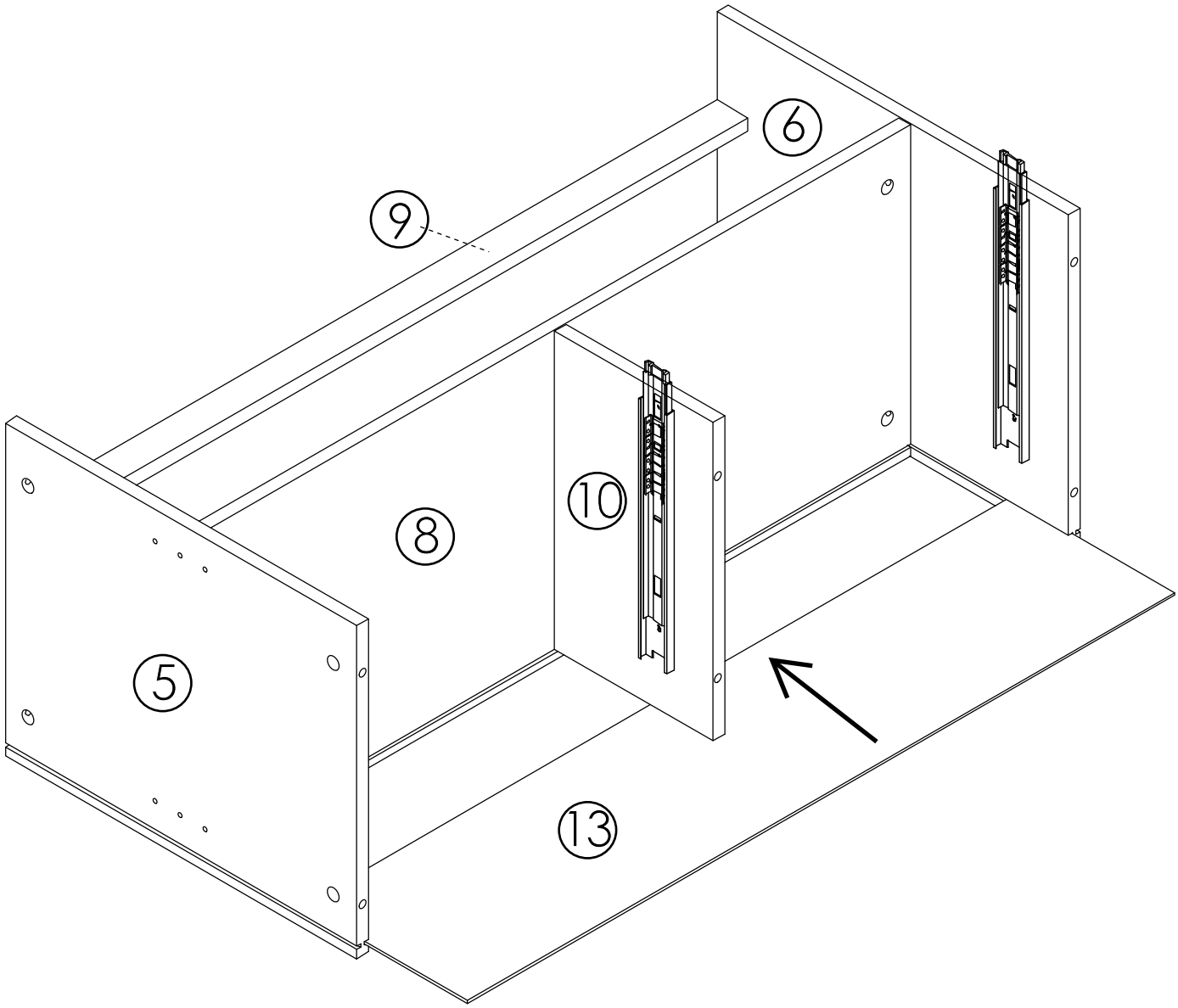

9.Screw Cam Bolts A into Part 2.

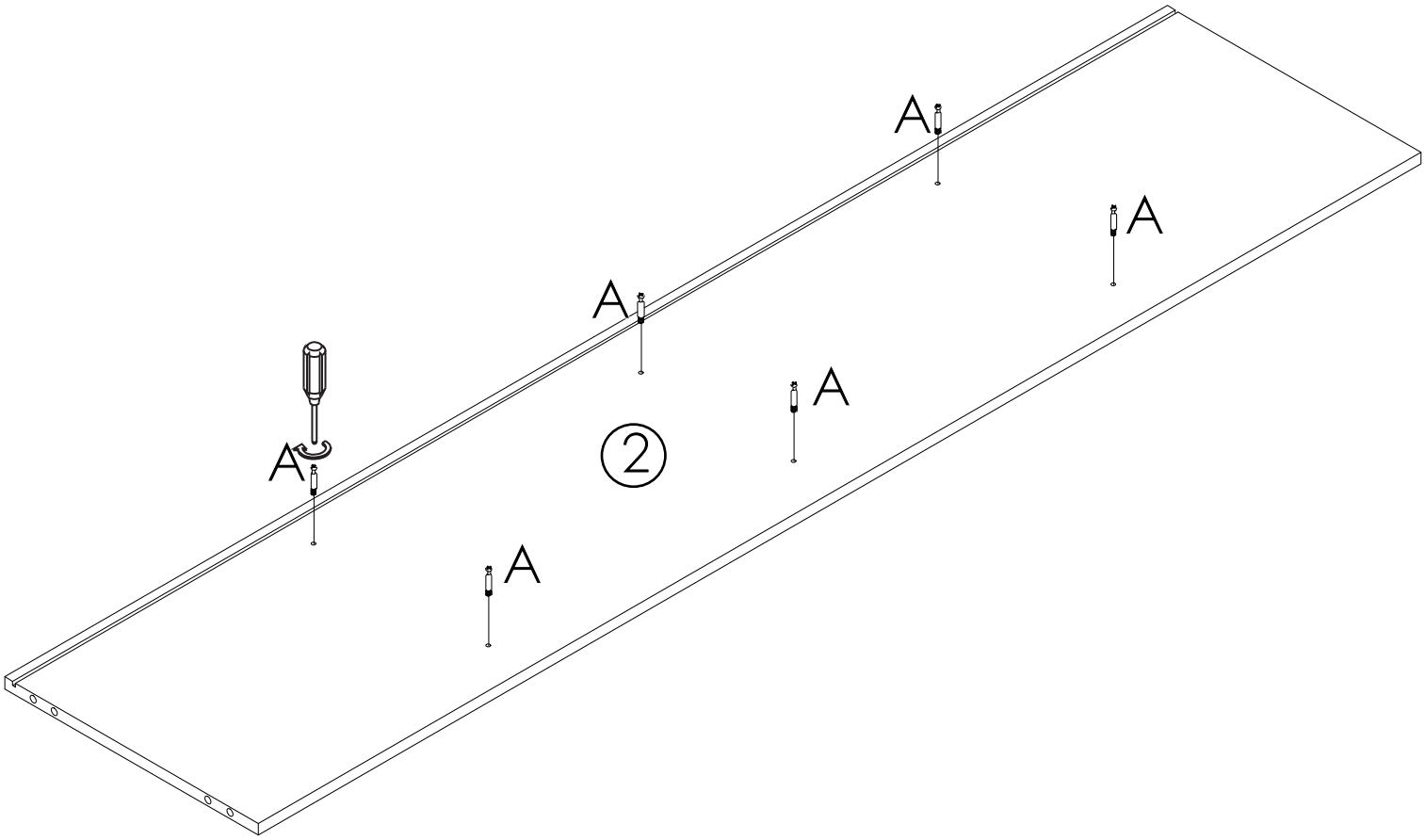

A×6

10. Attach Part 2 to Part 5 and Part 6. Secure with Cam Locks B. Please pay attention to the arrow direction on Cam Locks B.

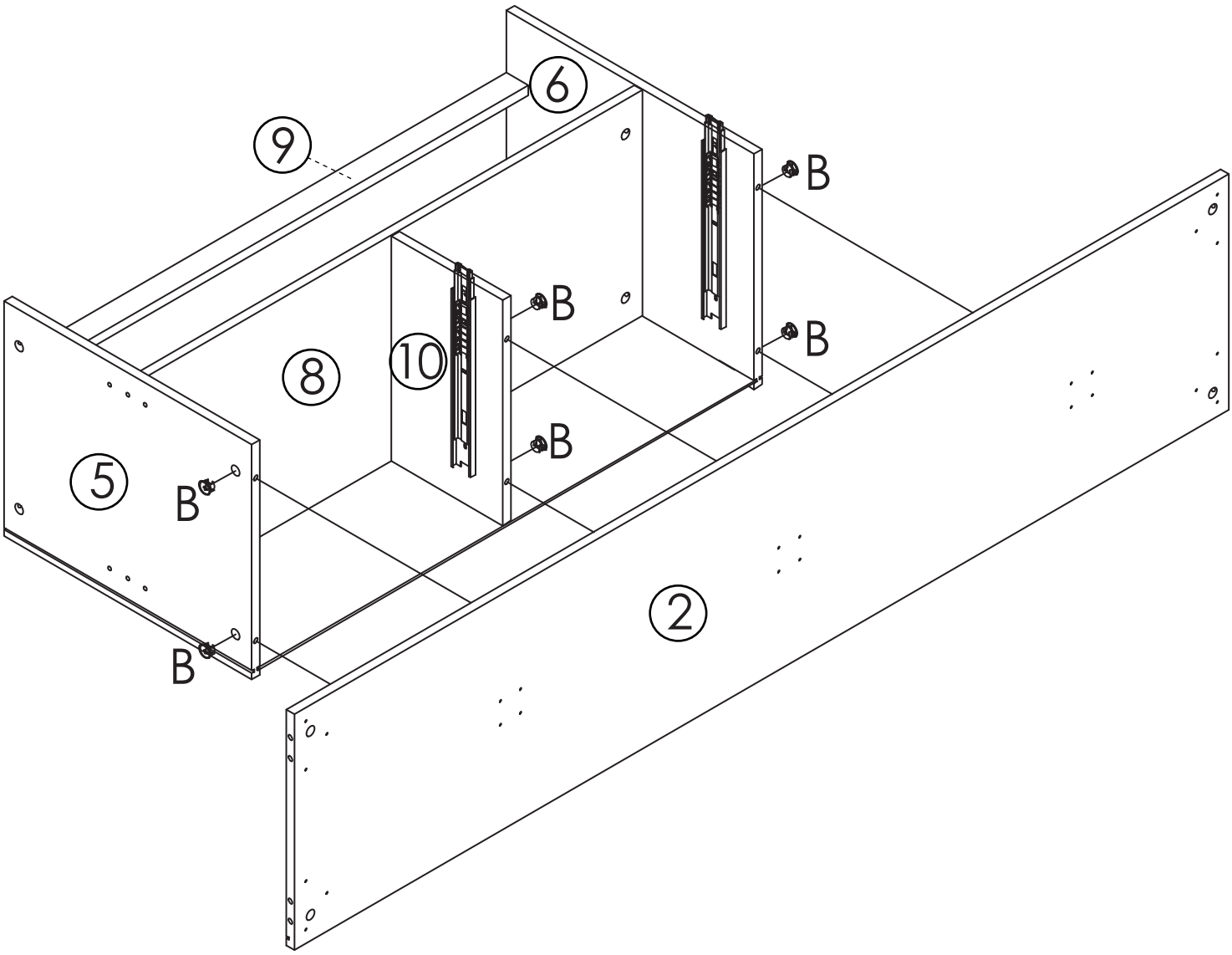

B×6

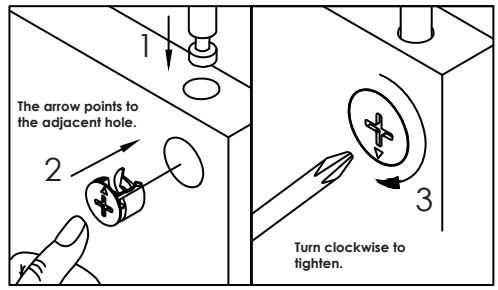

11.Screw Cam Bolts A into Part 3 and Part 4. Insert Dowels C into Part 3 and Part 4.

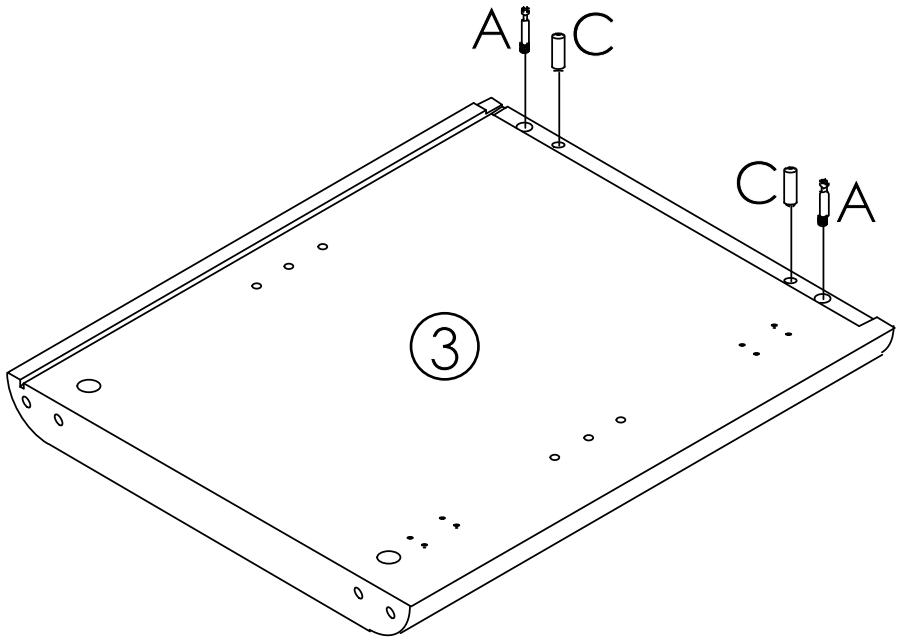

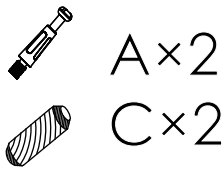

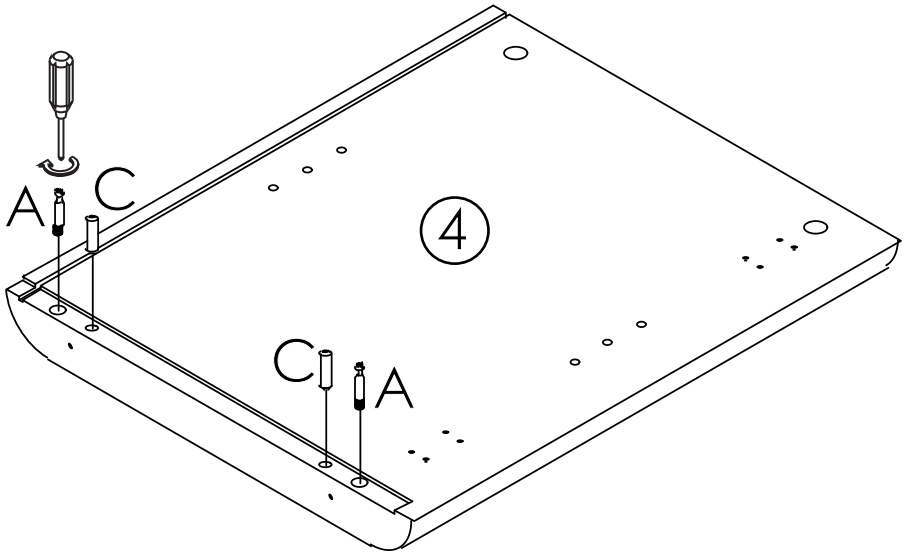

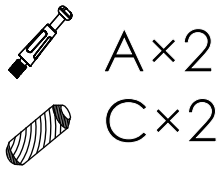

12.Attach Part 3 and Part 4 to Part 2. Secure with Cam Locks B. Please pay attention to the arrow direction on Cam Locks B.

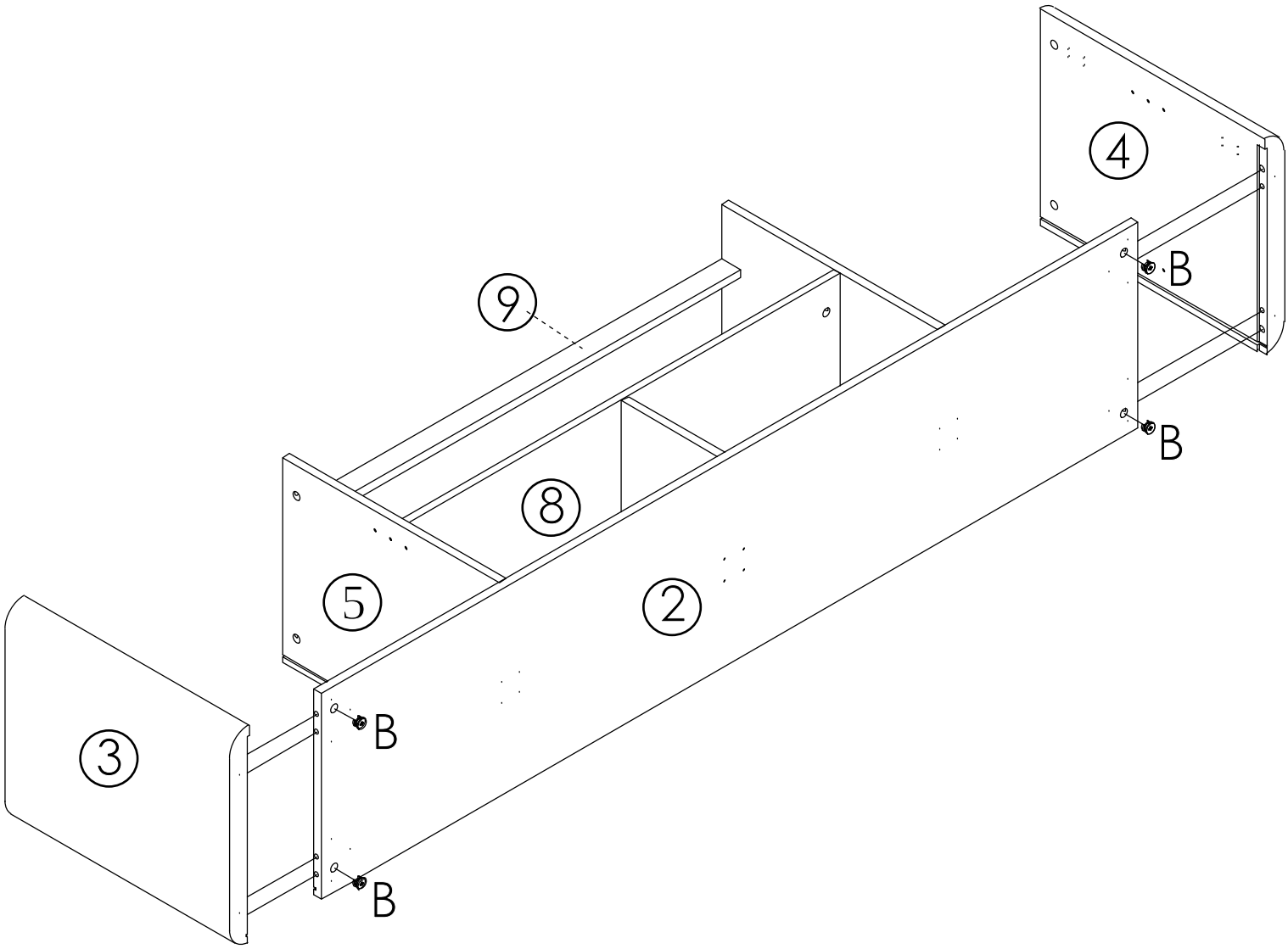

B×4

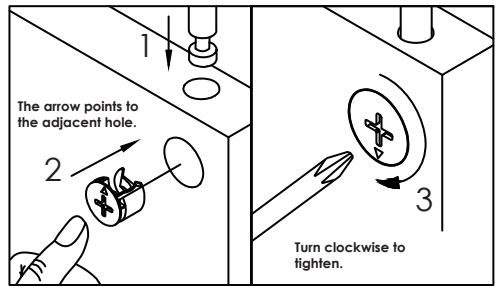

13. Insert Part 11 and Part 12. Use the grooves as your guides to slide into place.

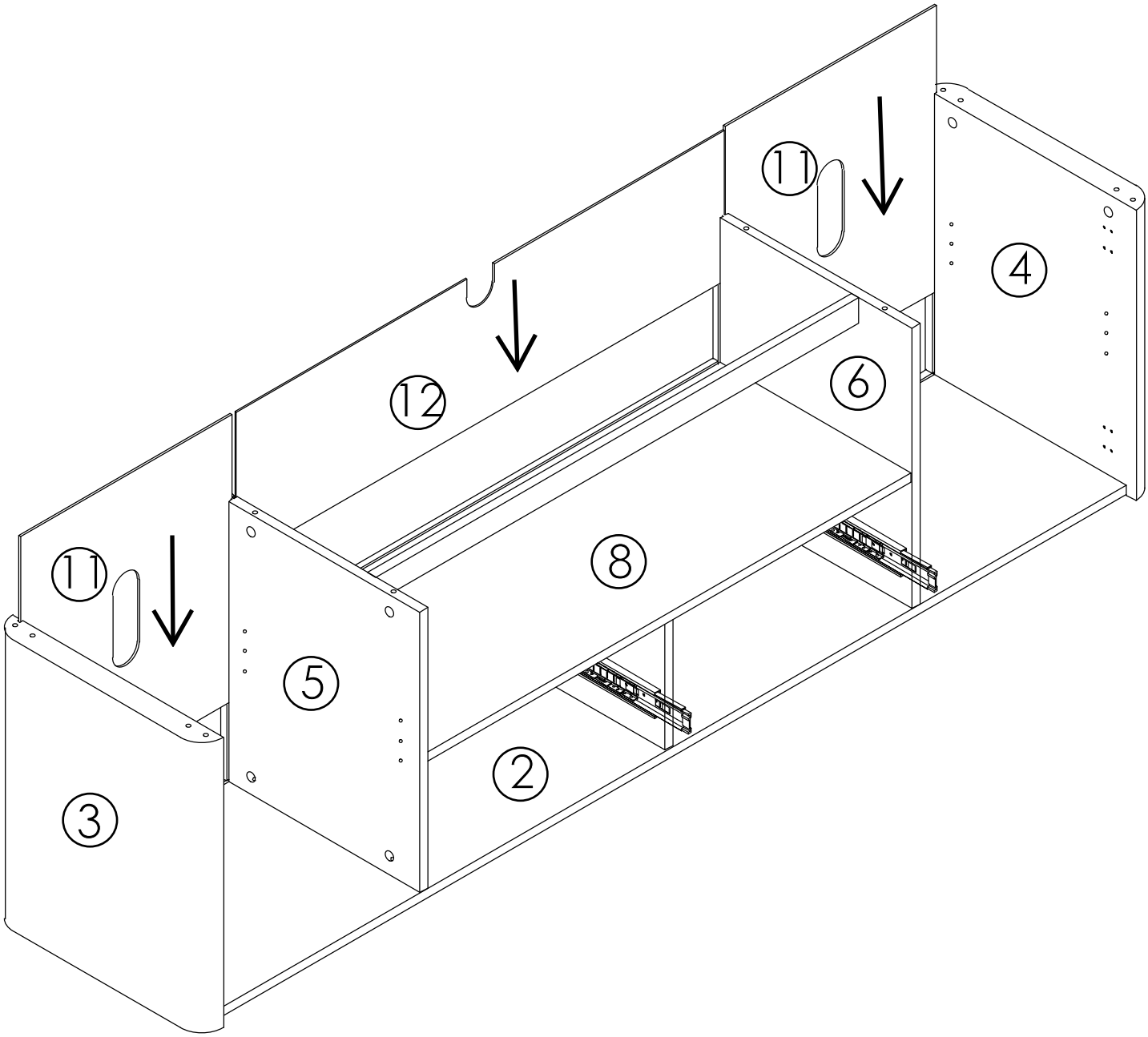

14.Screw Cam Bolts A into Part 1. Insert Dowels C into Part 1.

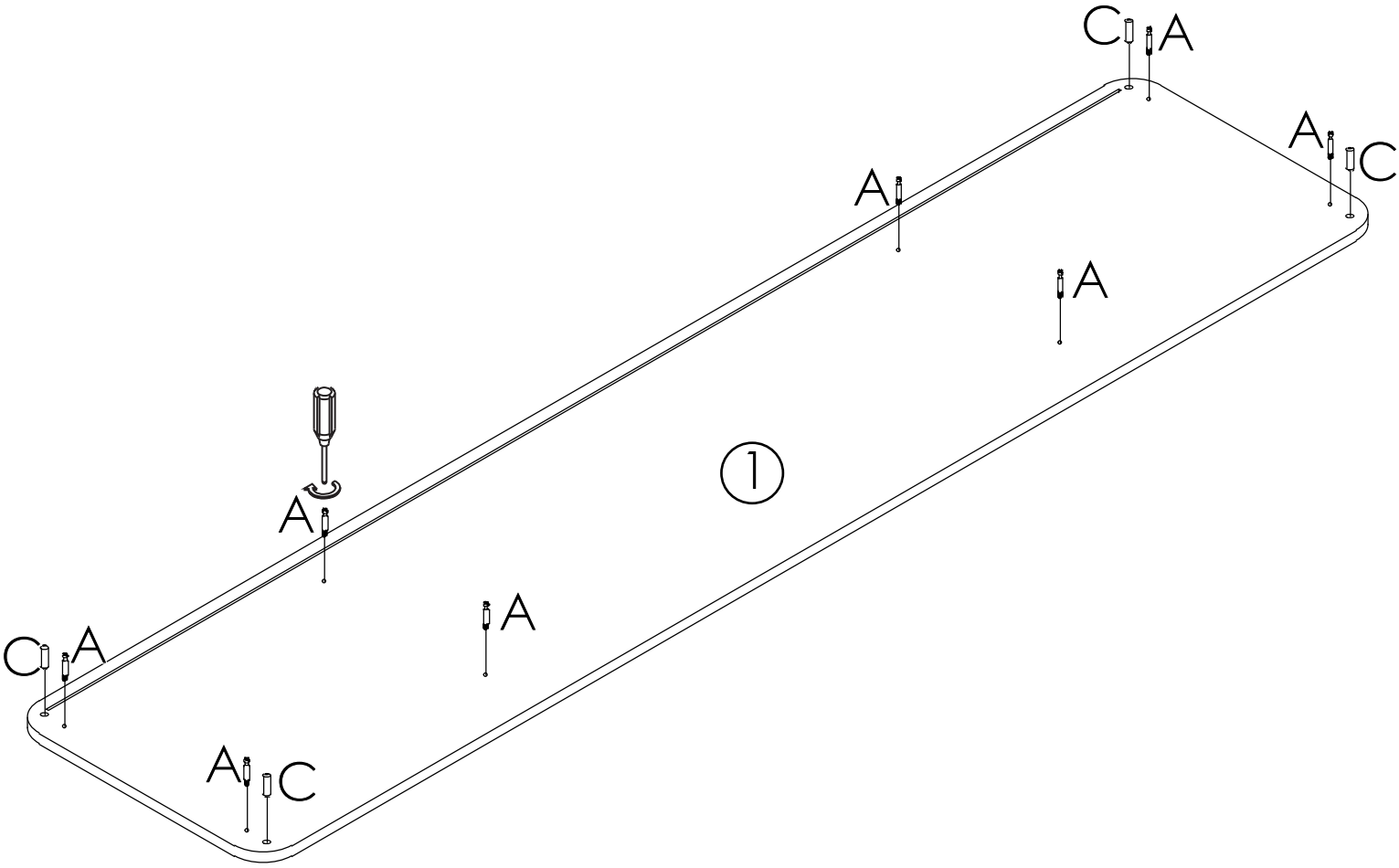

15.Attach Part 1 to the assembled part of the previous step. Secure with Cam Locks B. Please pay attention to the arrow direction on Cam Locks B.

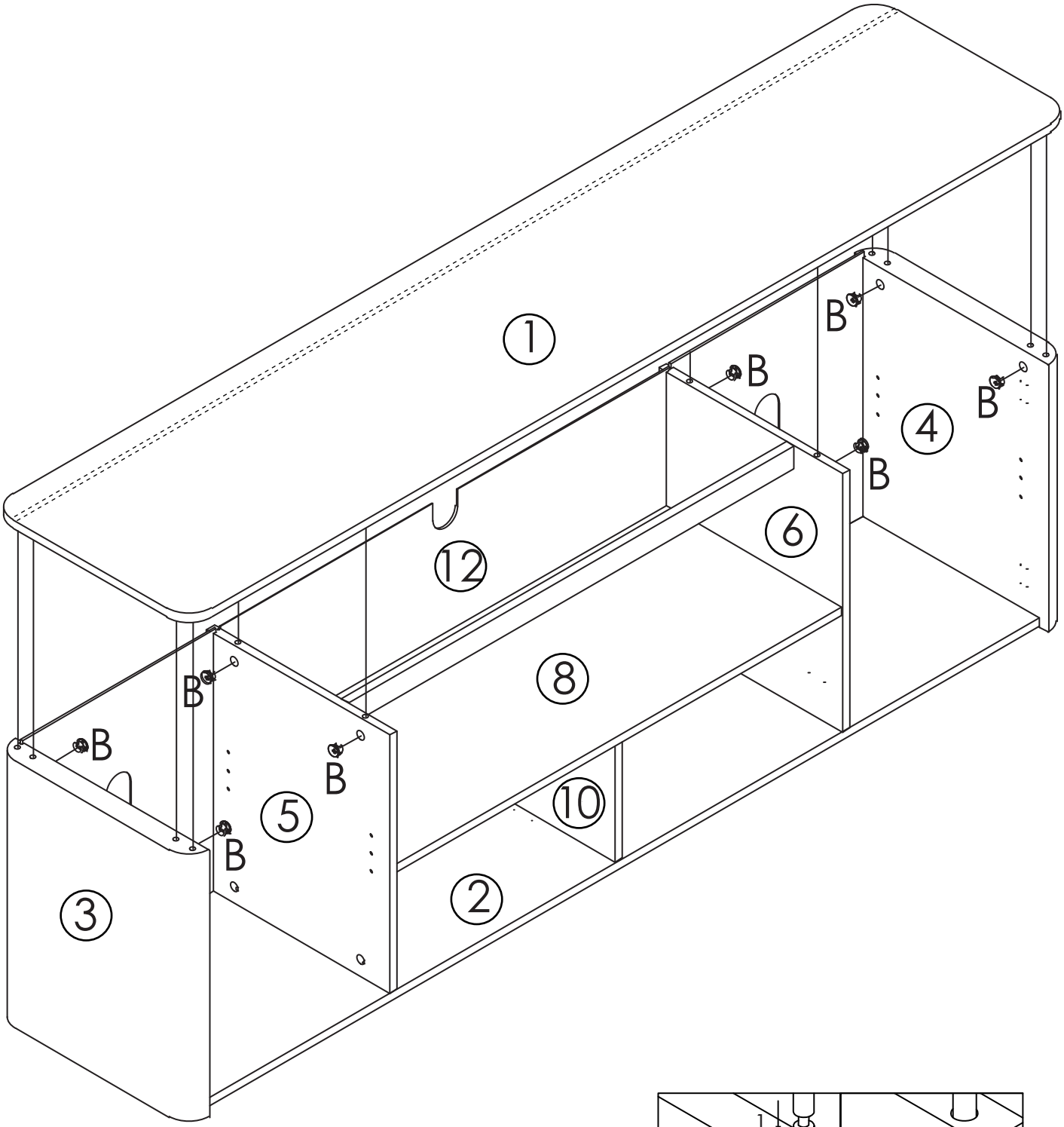

B×8

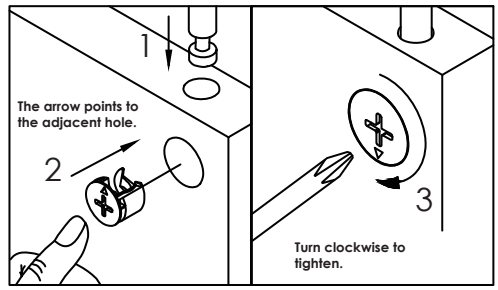

16.Attach Part 21 and Part 22 to Part 2. Cover visible Cam Locks with Stickers J.

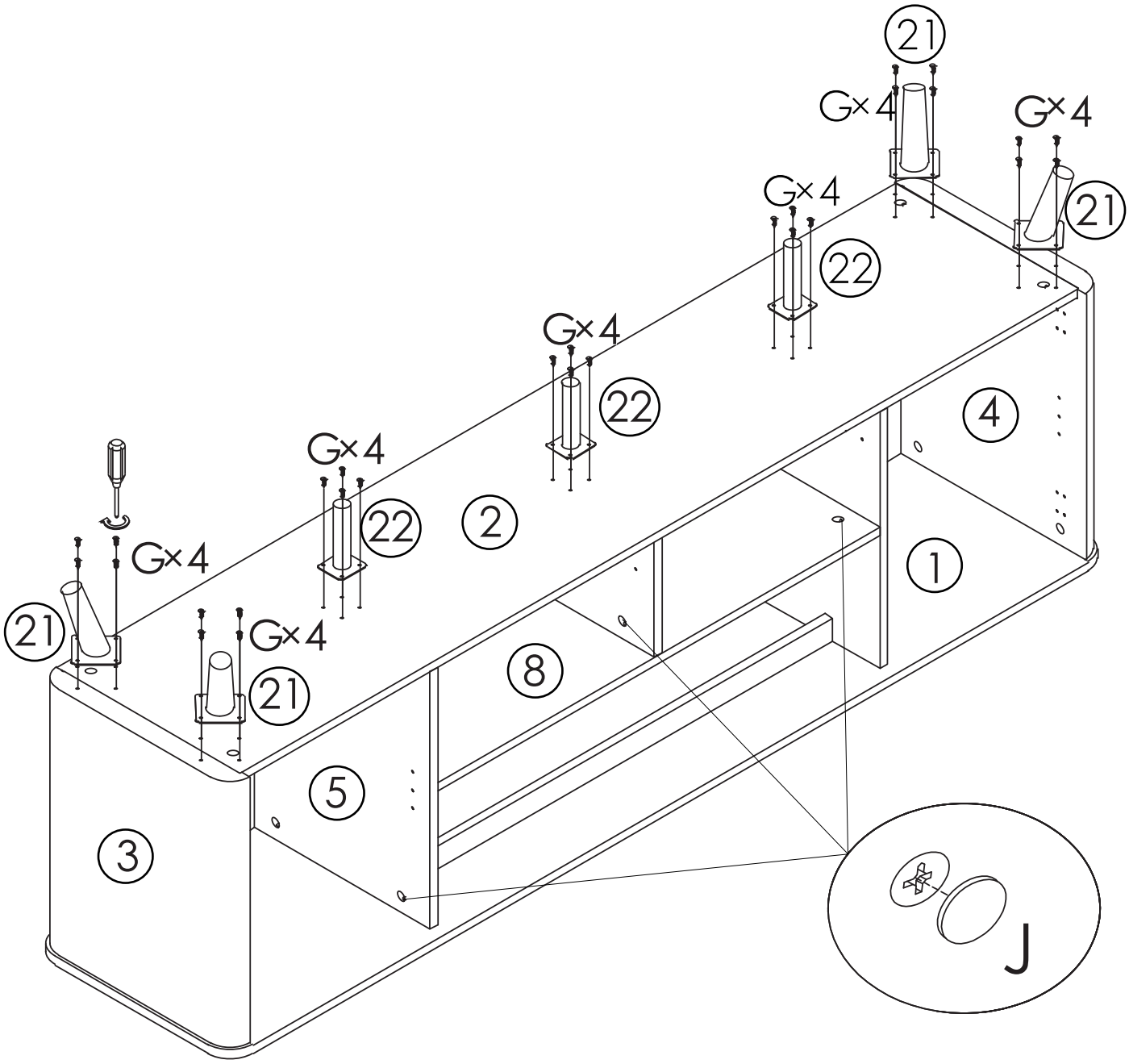

G×28

J×34

17. Insert K into your desired shelf location. Then slide Part 7 into place. Adjust the feet to level the unit on the floor.

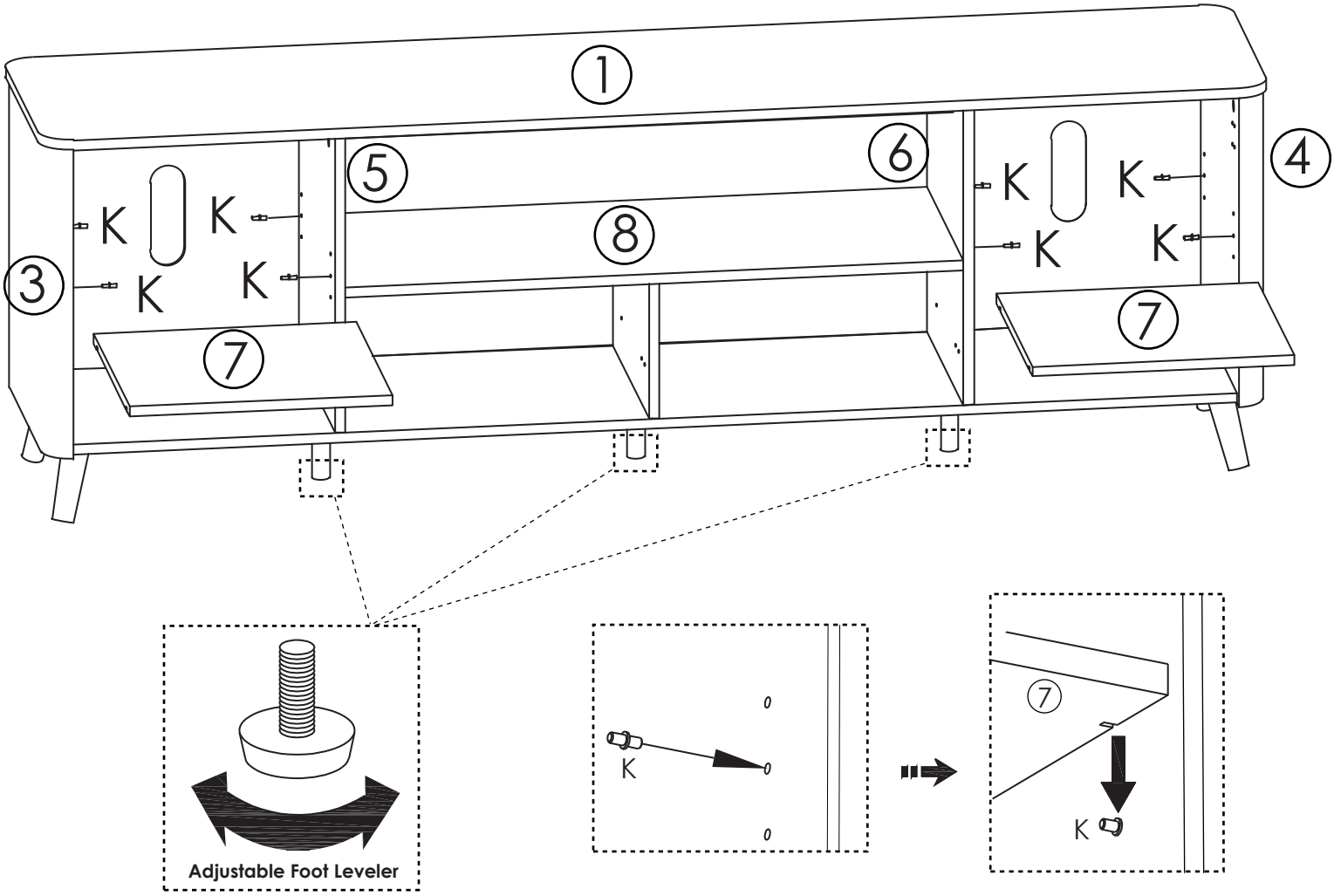

K×8

18. Attach Hinges L to Part 14 using Screws F.

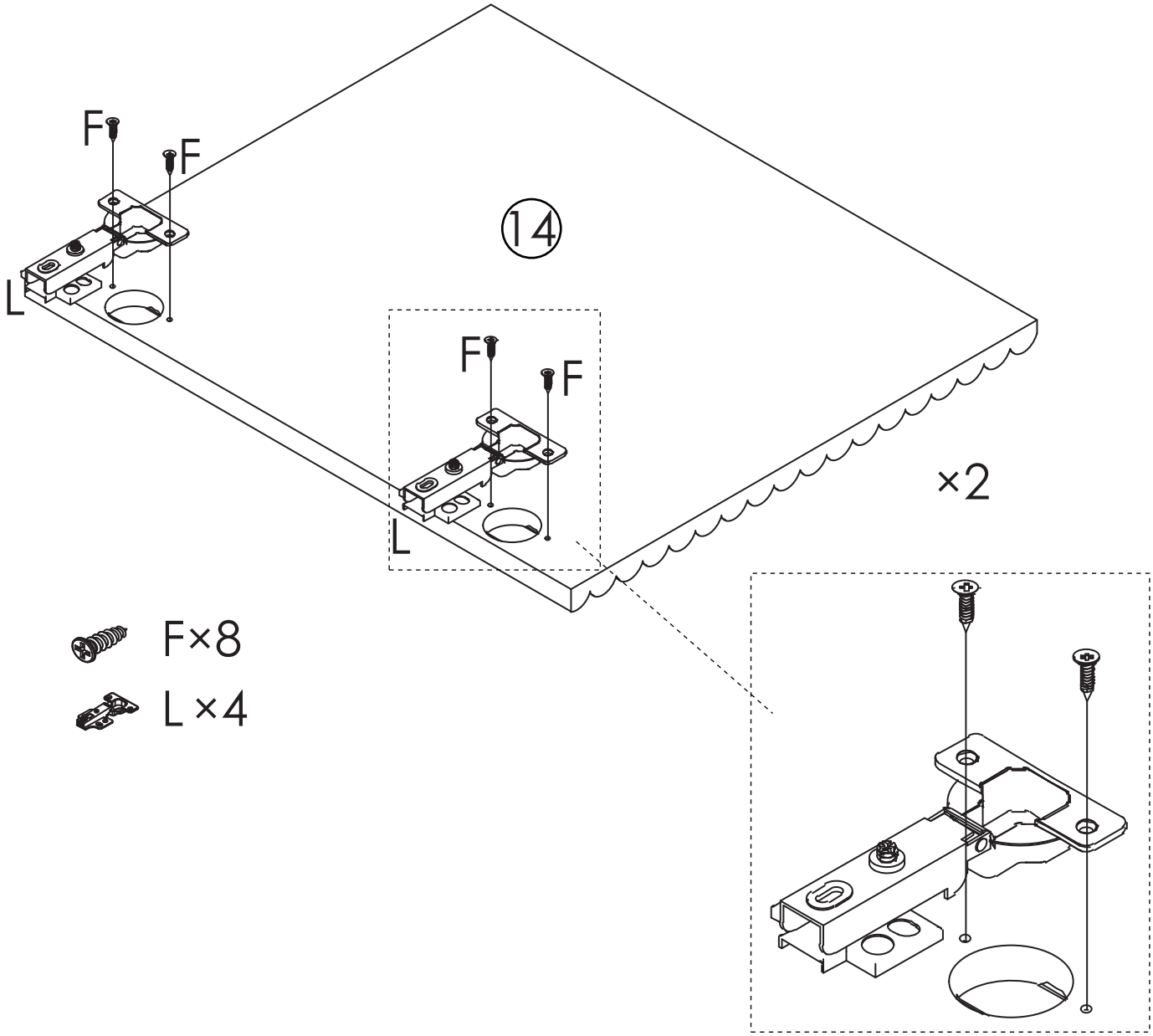

19. Attach Hinges L to the frame using Screws F. Adjust the cabinet doors as indicated below.

F×4
①
⑭
F×4
⑧
④
L
⑭
F×4
F×16

Adjusting The Cabinet Doors

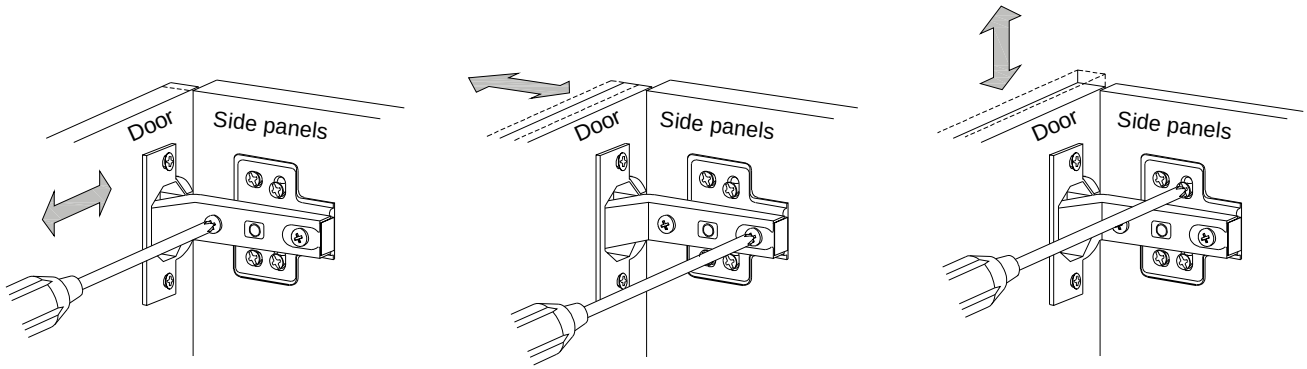

Adjust horizontal width with this screw.

Adjust depth position by loosening the hinge arm mounting screw.

Adjust vertical height via the screws in the mounting plate.

20.Attach Part 15 and Part 17 to Part 16 using Screws E. Insert Part 18. Use the grooves as your guides to slide into place.

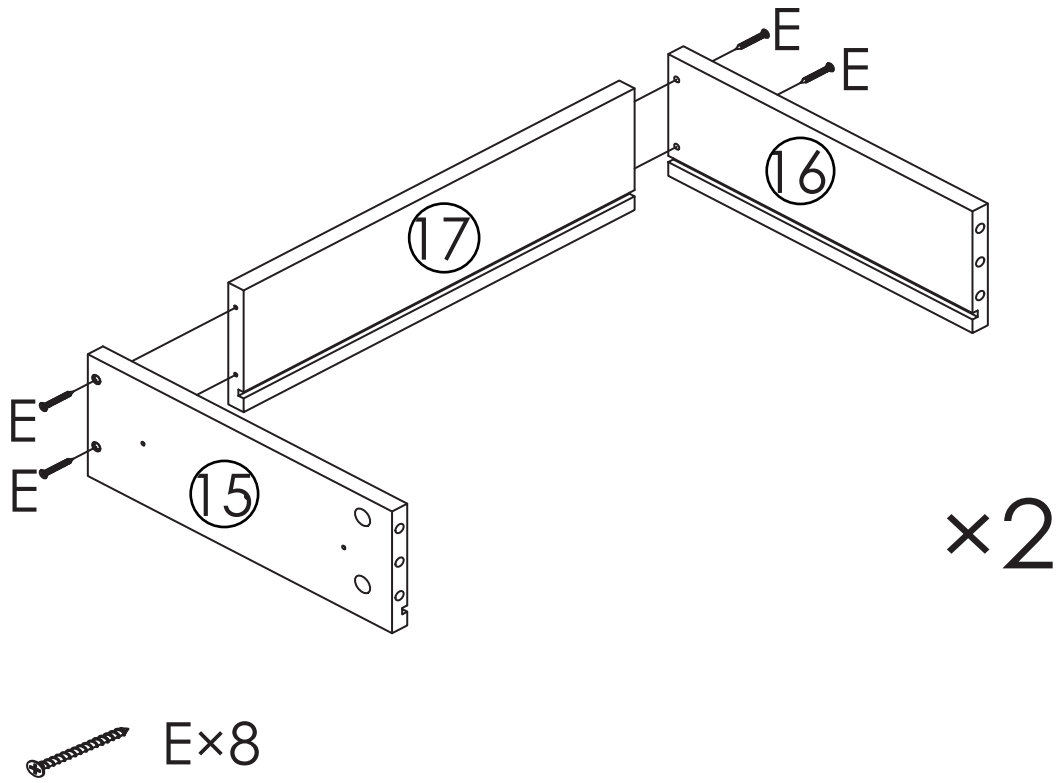

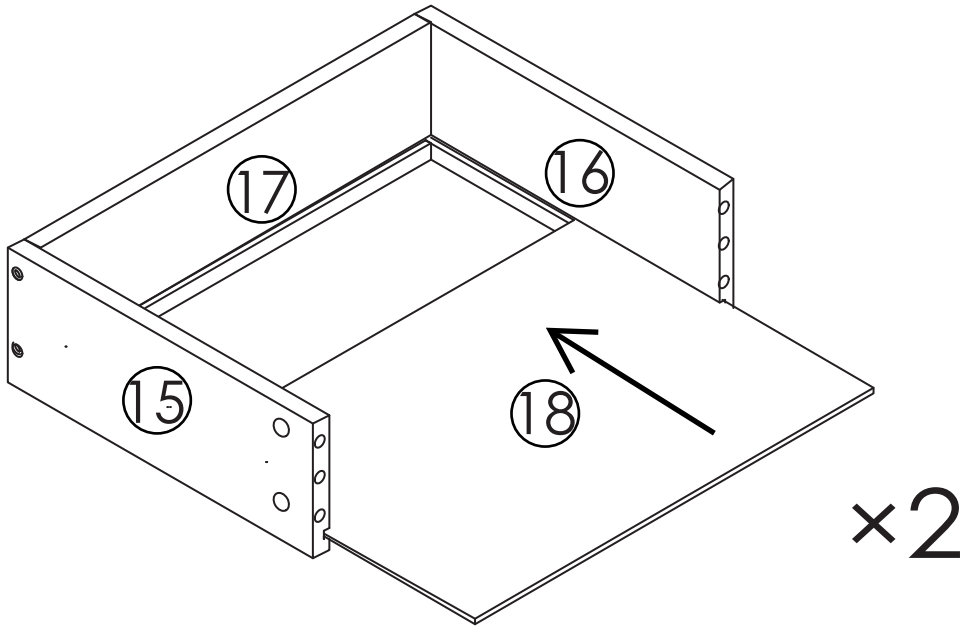

21. Screw Cam Bolts A into Part 19 and Part 20. Insert Dowels C into Part 19 and Part 20.

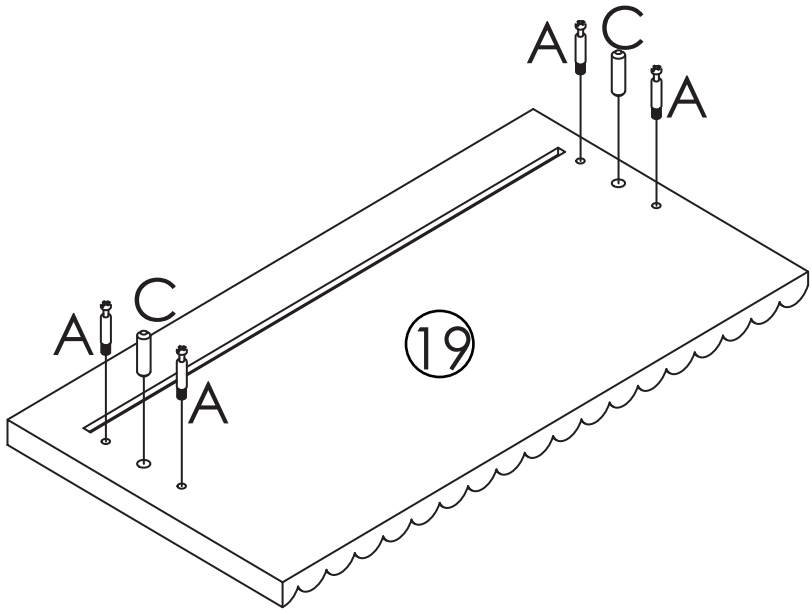

A×4

C×2

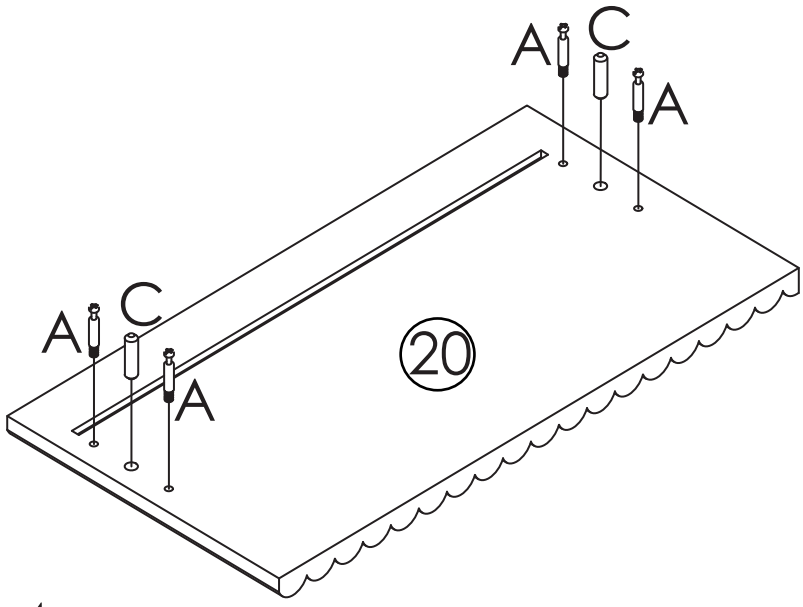

A×4

C×2

22.Attach the assembled parts of previous step to Part 19 and Part 20. Secure with Cam Locks B. Please pay attention to the arrow direction on Cam Locks B.

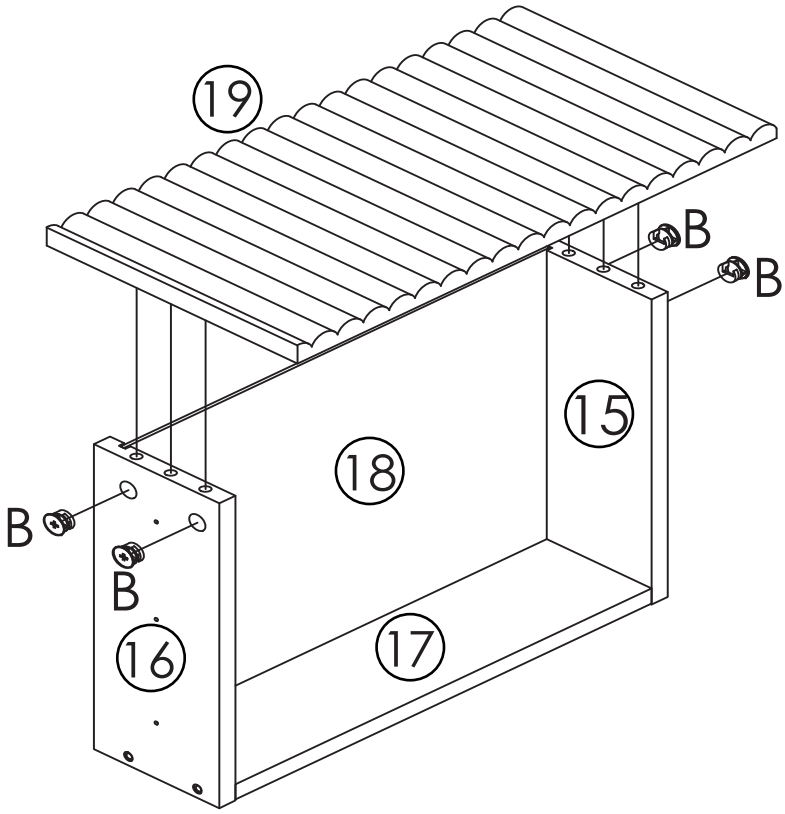

B×4

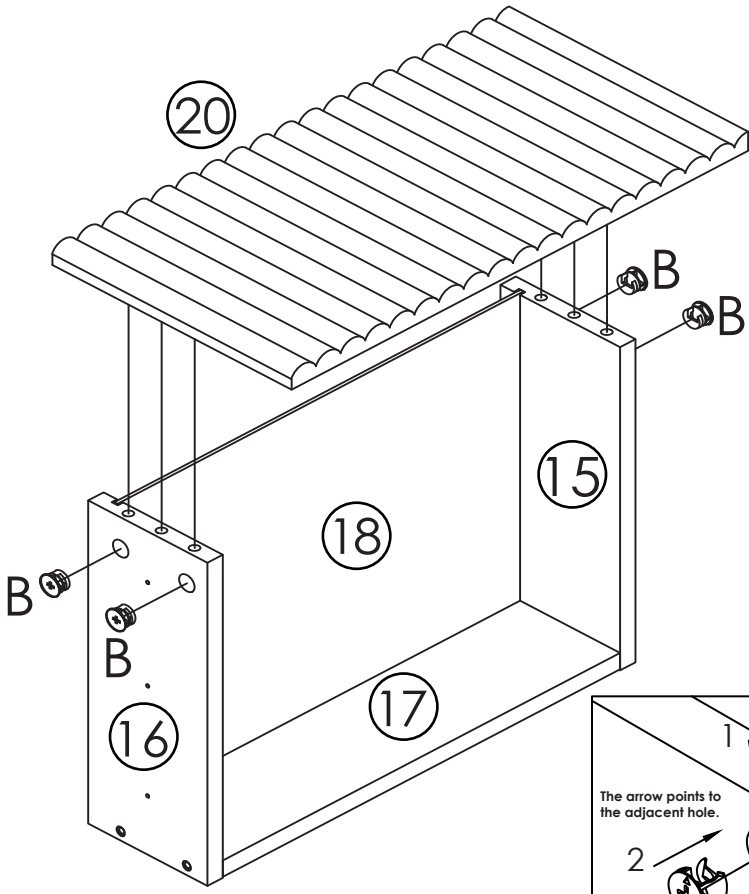

B×4

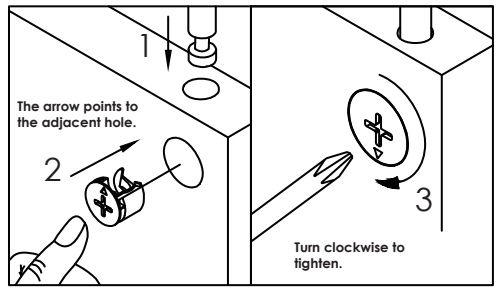

23.Attach D2 to Part 15 and Part 16 using Screws F.

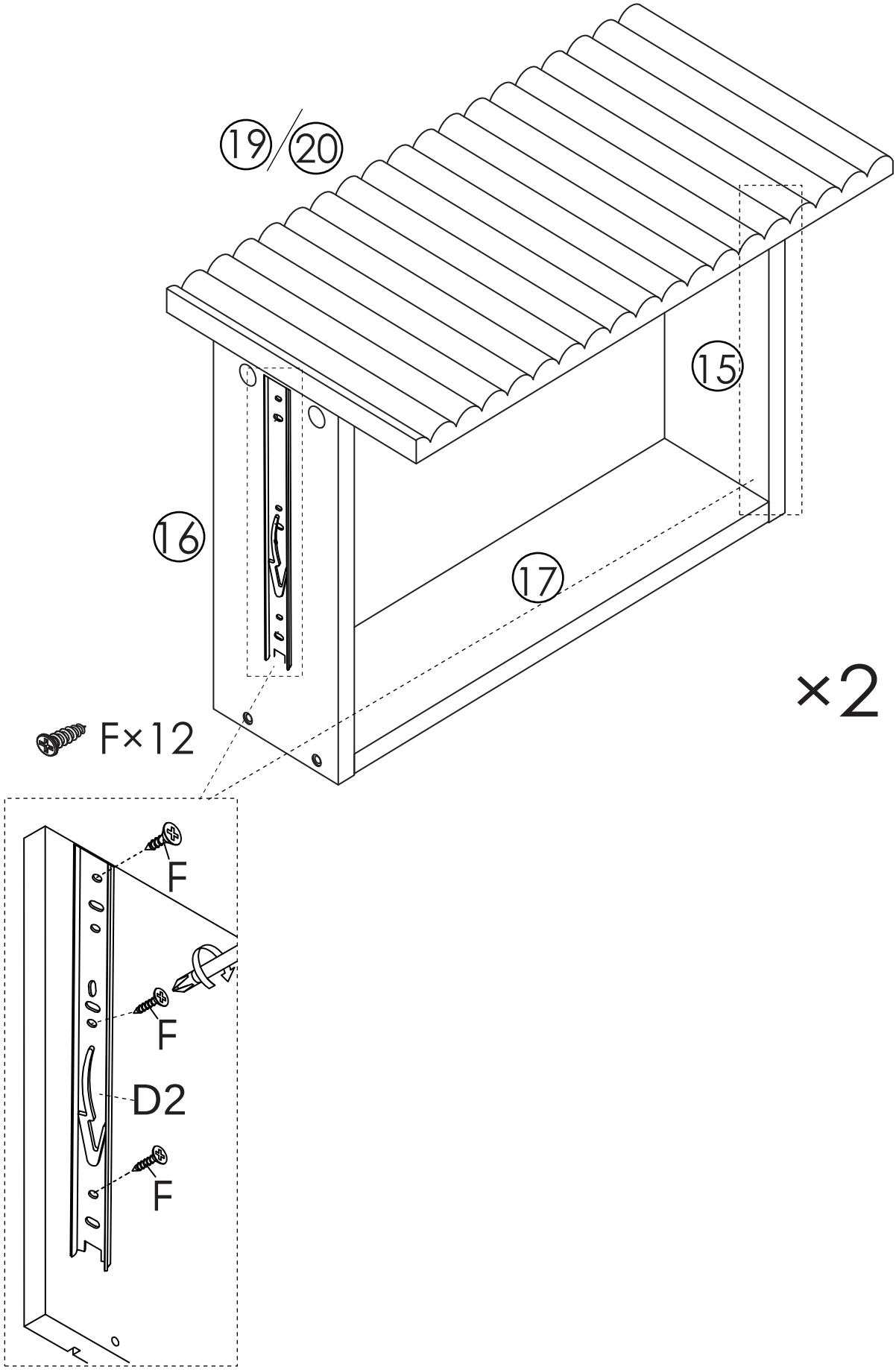

24.Slide both drawers into the unit. Line up the drawer member so it is inside the guides of the cabinet member. Once the connection is made, push the drawer into place entirely. It may not be a smooth glide on your first try, but will improve after it's fully inserted.

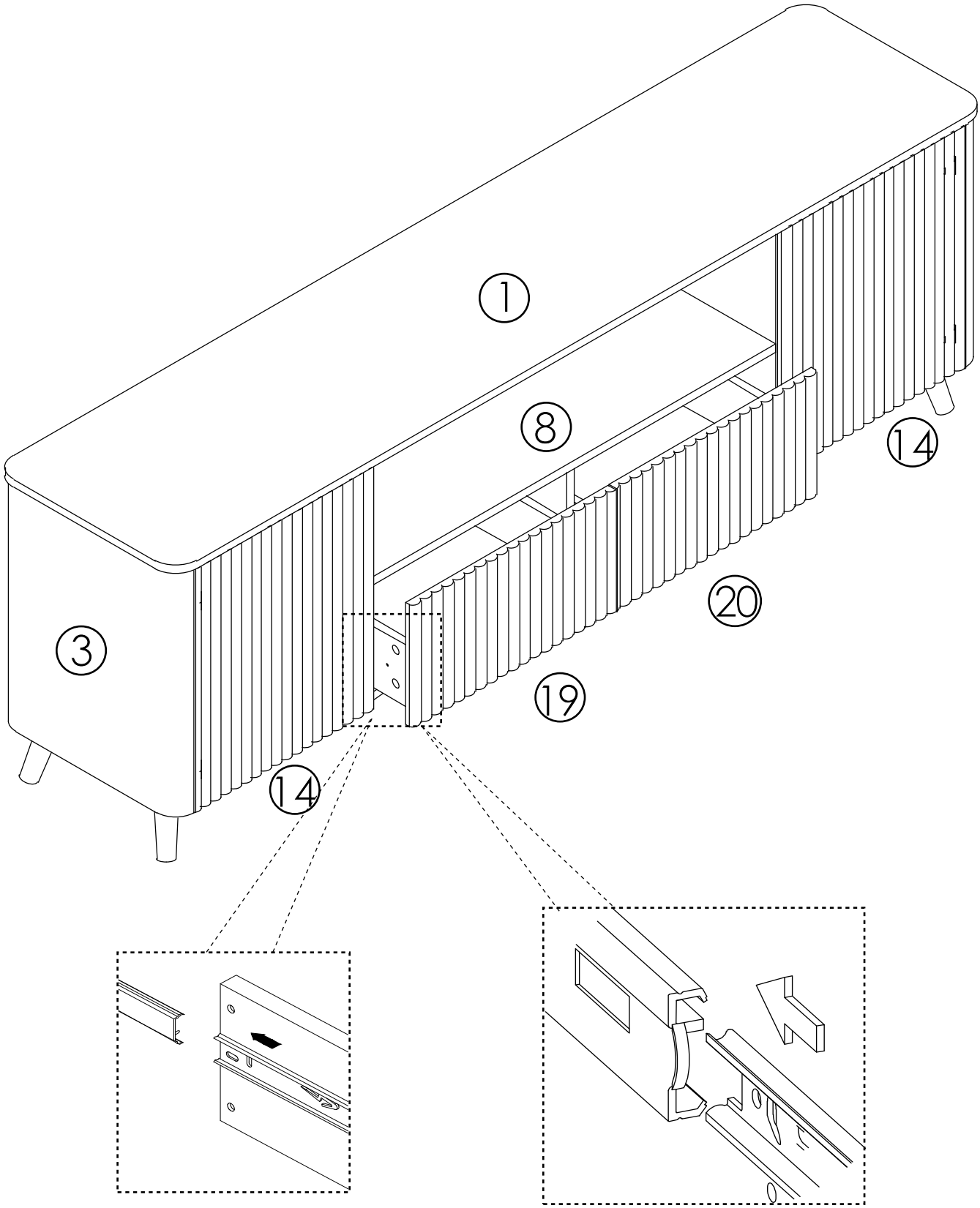

25. Attach Part H to the back of the unit using Screws I.

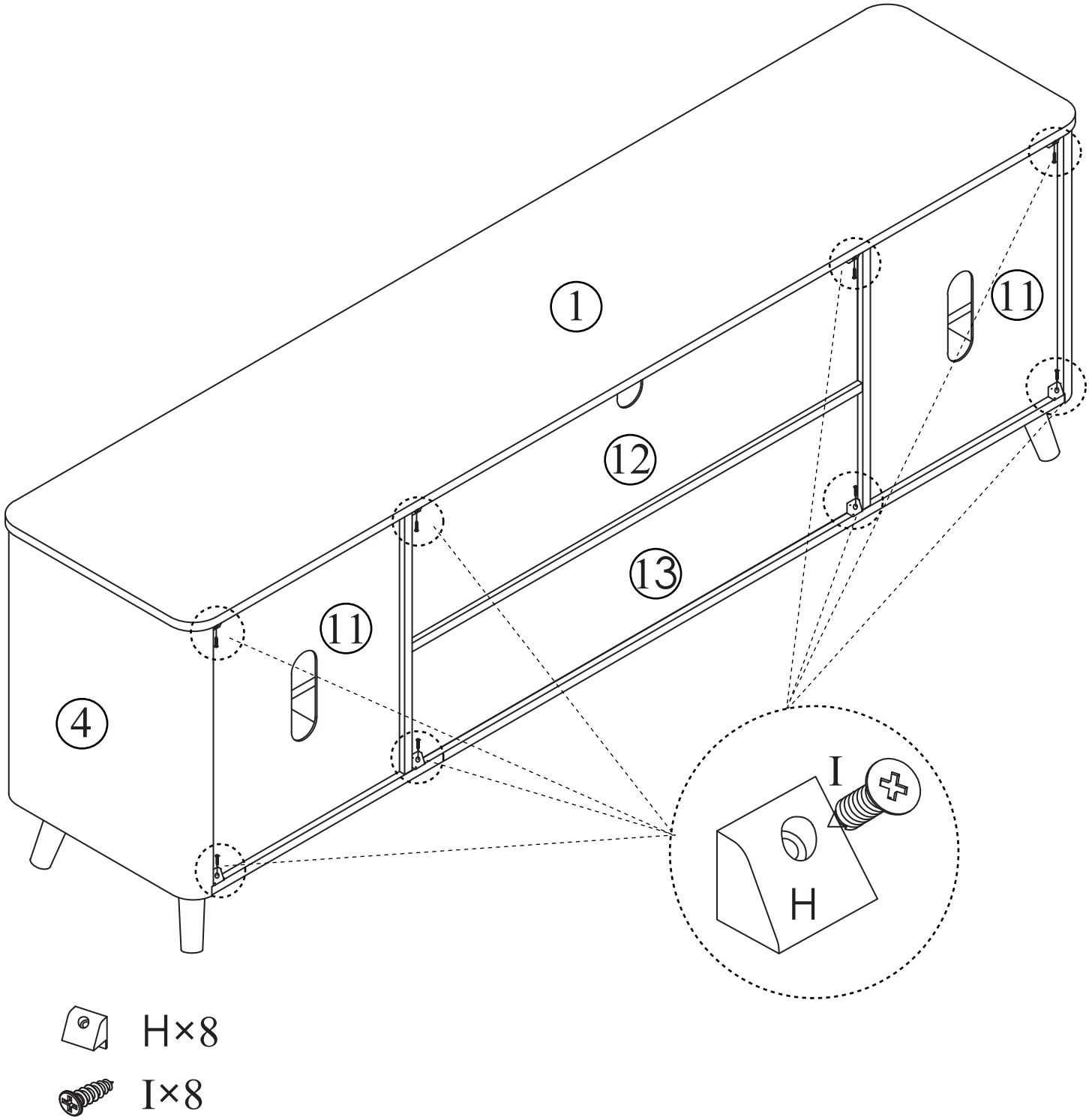
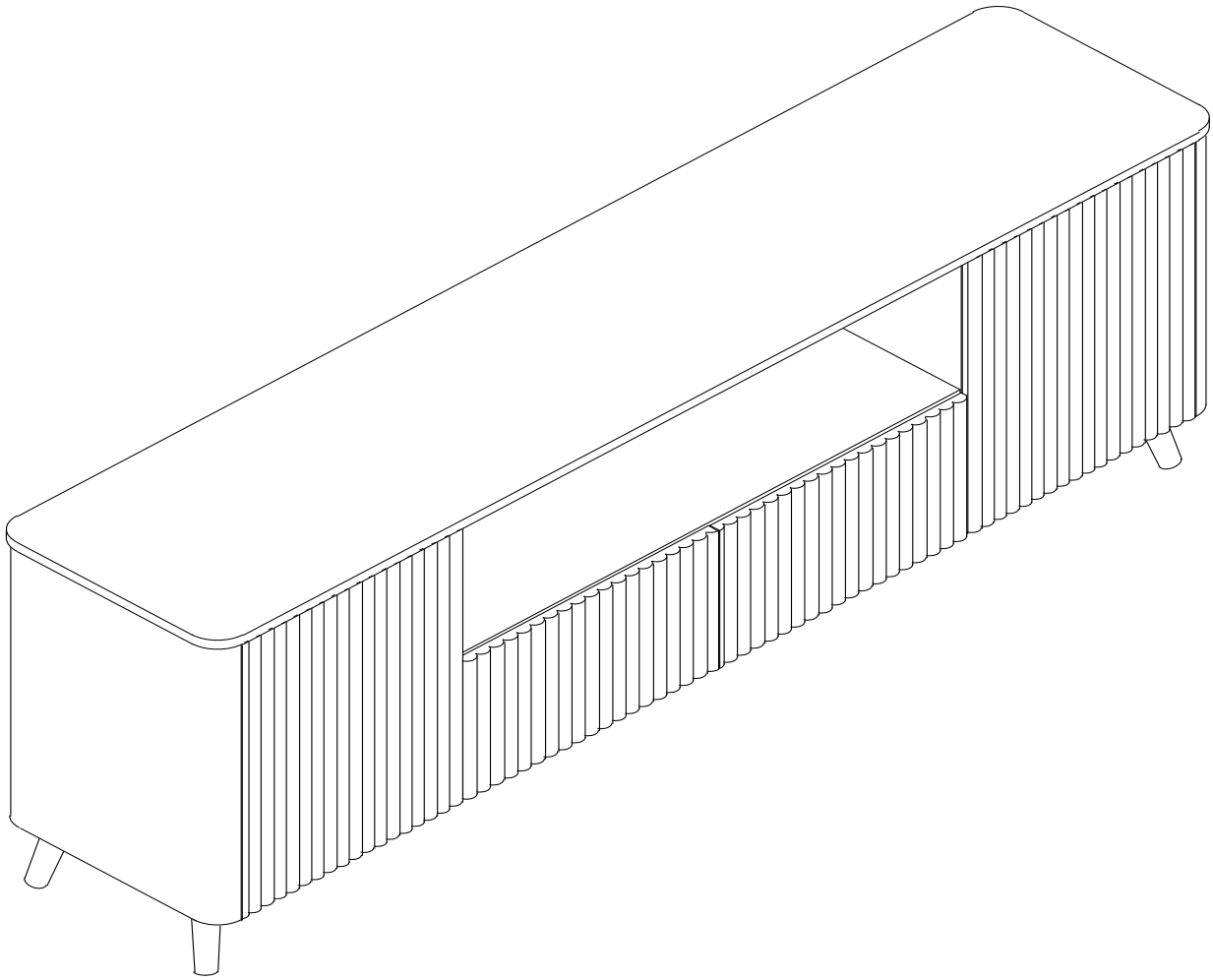
26. Assembly complete. Enjoy.