ASSEMBLY INSTRUCTIONS

Thank you for purchasing this quality product. Be sure to check all packing materials carefully for small parts, which may have come loose during shipment. Identify and count all items and compare with the parts list shown below. It is recommended to have two people during assembling and to remove the back and base of the furniture out from the box.

Please follow the drawings below to assemble the item

Parts List			
NO.	DESCRIPTION	SKETCH	Q'TY
A	Seat	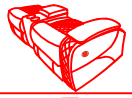	1 PC
B	Left Backrest		1 PC
C	Console Backrest	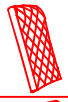	1 PC
D	Right Backrest		1 PC
E	Left ear		1 PC
F	Power Cable		1 PC
G	Knob Screws		2 PCS
H	Transformer		1 PC
I	Power Connector		1 PC

STEP 1: Please take out the knob screws (G)from inside of the zippered center console Insert the console backrest (C) to the middle of the seat (A) .Use the knob screws (G) to secure the console backrest in position.

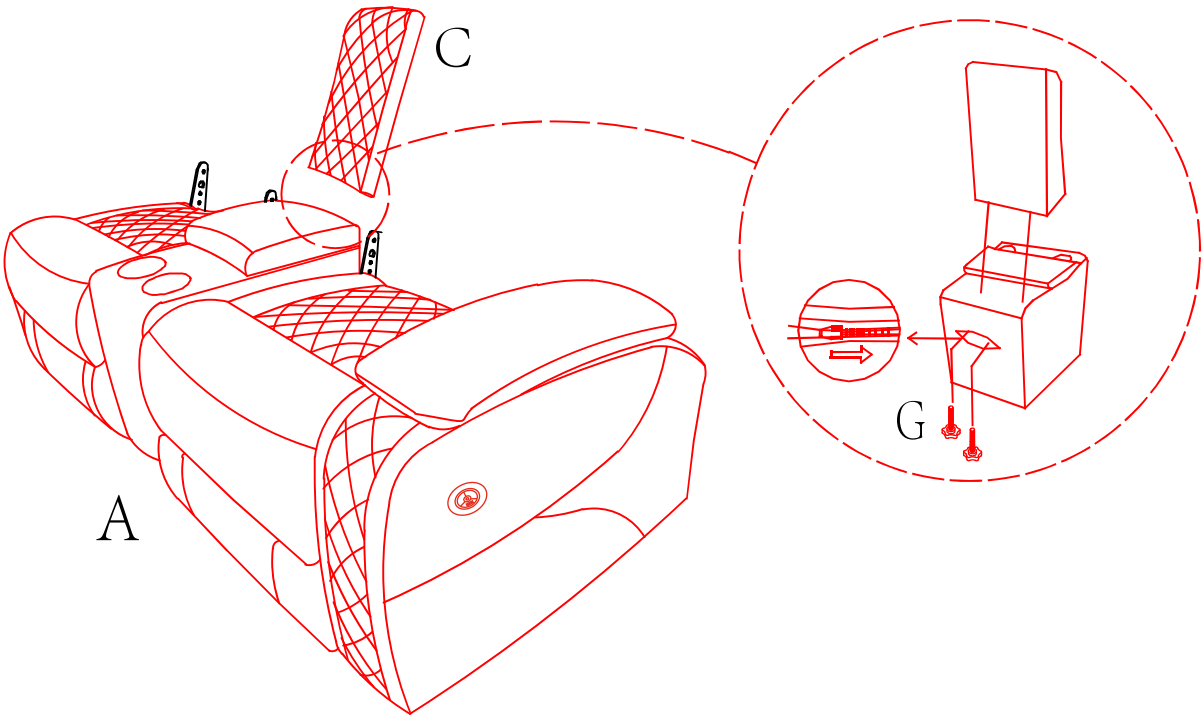

STEP 2: Insert the left backrest (B) and the right backrest (D) to the seat(A) Make sure the backrests are secured in position

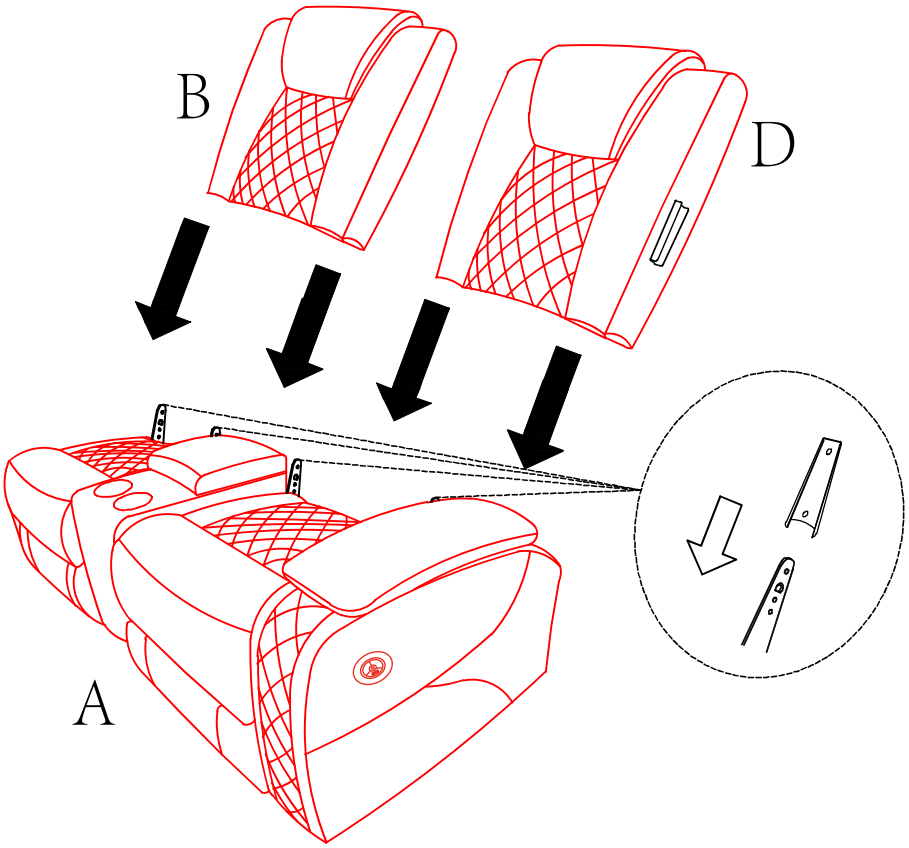

STEP 3: Insert the right wing(E) to the backrest(D)and make sure it is secured in position.

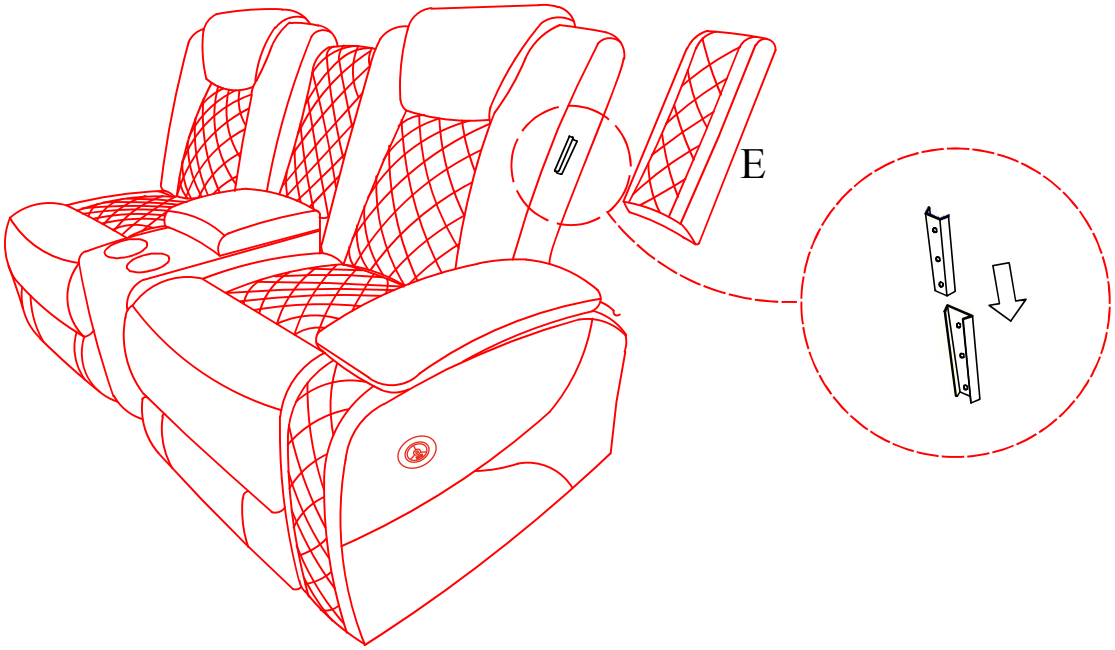

STEP 4: Find the electric motor cable which is fasted to the metal frame of the seat.Connect the transformer(H) to the electric motor cable.The other end of transformer(H) is connected to the power connector(I). At the same time, the jack socket (F) is connected to another seat's electric cable as picture below.

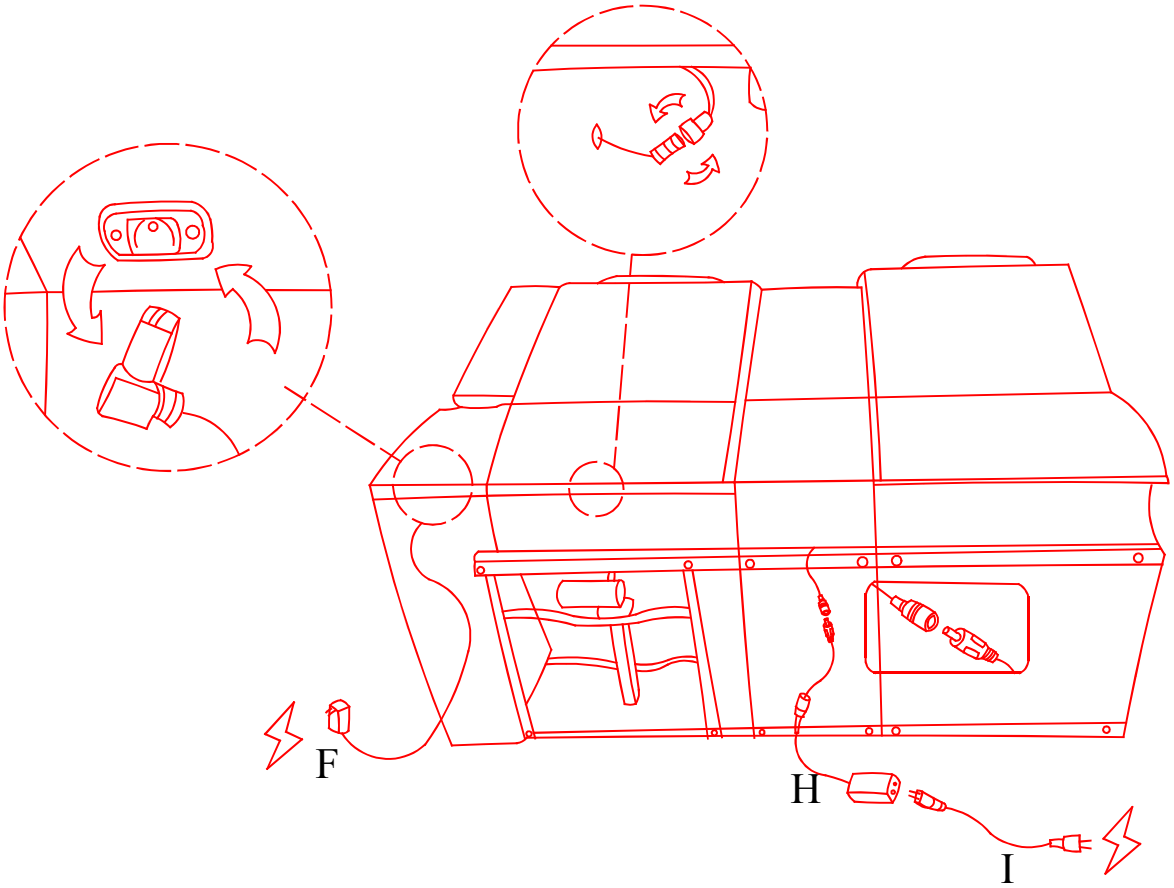
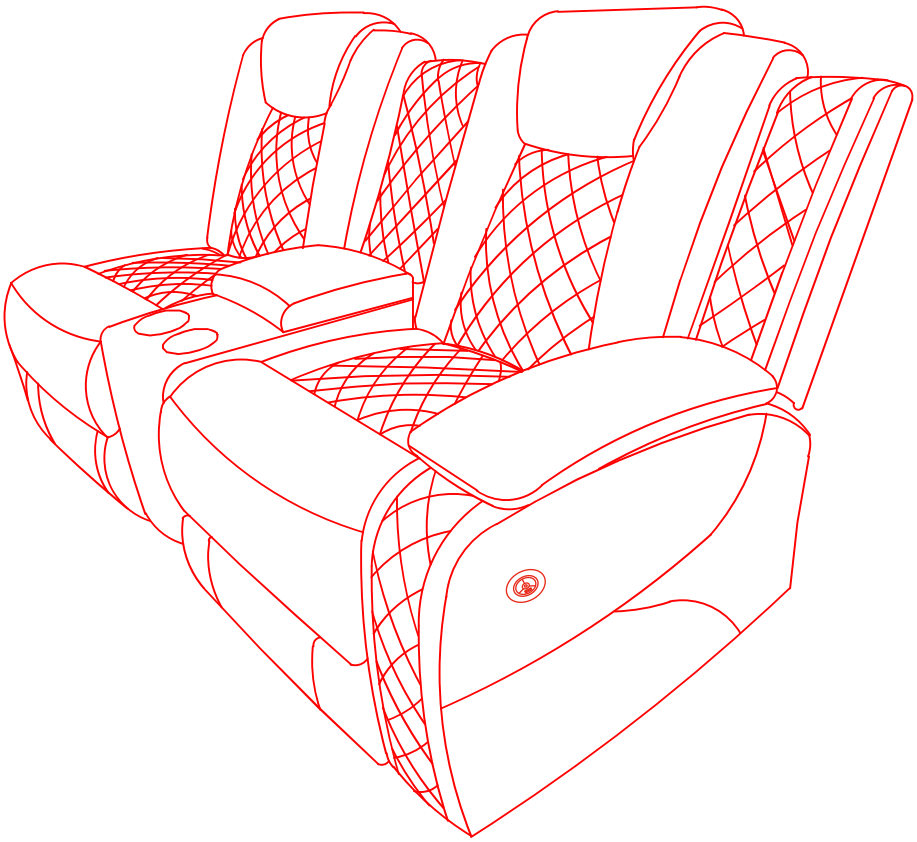
STEP 5: Completed as picture below