RIVERSIDE OAK WOOD 3 DRAWER CONSOLE TABLE

DESIGN# SFV9762

Assembly Instructions

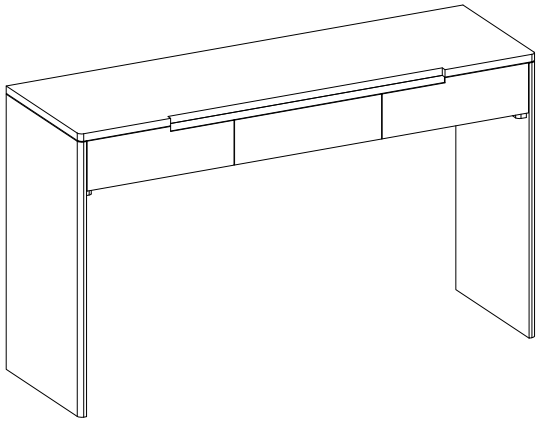

Need help?
Feel free to contact us via email or call
if you have any specific questions!

contact us:
cs@safavieh.com
866-422-9070

SAFAVIEH
COUTURE

Thanks for bringing Safavieh Couture into your home

Everything we make is incredibly simple to set up, including your new Console table. You won't need any additional tools.

Parts List

A X 1
TOP BODY

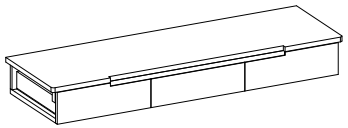

B X 2
Leg

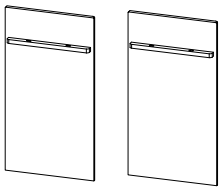

Hardware List

HW1 x 4
JCB Bolt 40X8 mm

HW2 x 4
Flat washer 8X25mm

HW3 x 1
Allen Key M5

HW4 x 2
Wall Clip

HW5 x 2
Zip Tie

HW6 x 4
Screw (35x4mm)

HW7 x 4
Screw Plug

1

Place the top body (A) upside down on a soft surface. Align the screw holes from the top (A) to the leg (B) screw holes as shown.

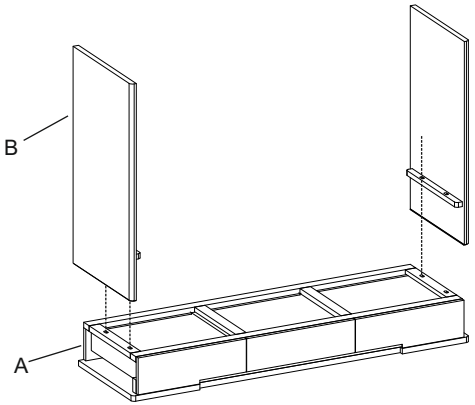

2

Place the Flat Washers (HW2) on the JCB Bolts (HW1). Attach the legs (B) to the top (A) by using the Allen Key (HW3) to screw in the JCB Bolts (HW1) with the washers (HW2). Firmly tighten the bolts.

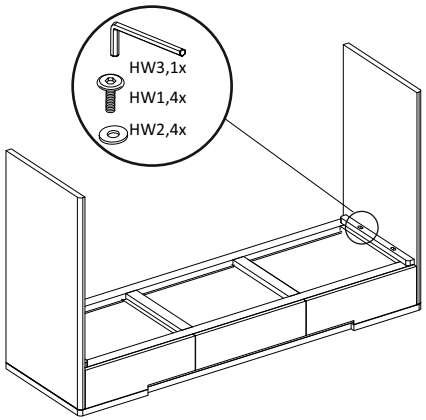

3

Turn the console table upright. Attach the console table to the wall to prevent it tipping over. To do this, insert the screw plugs (HW7) into the wall. Align the holes on the wall clips (HW4) to the screw plugs (HW7) in the wall. Attach them to the wall with the screws (HW6).

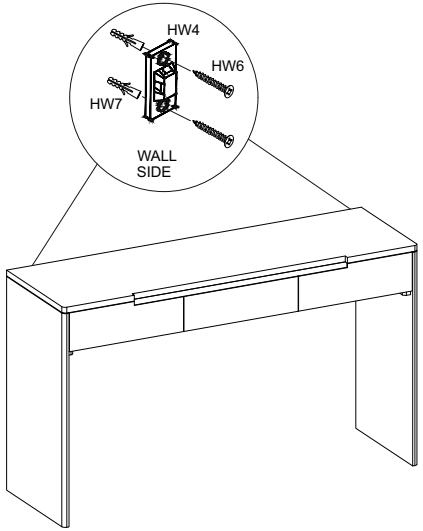

4

Insert the zip tie (HW5) into the loop on the wall clip (HW4) and the loop on the back of the console table.

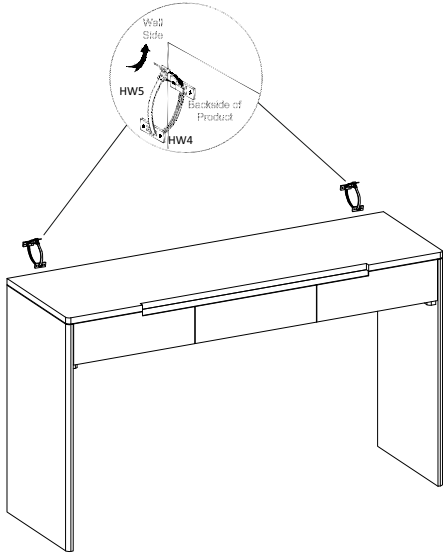

5
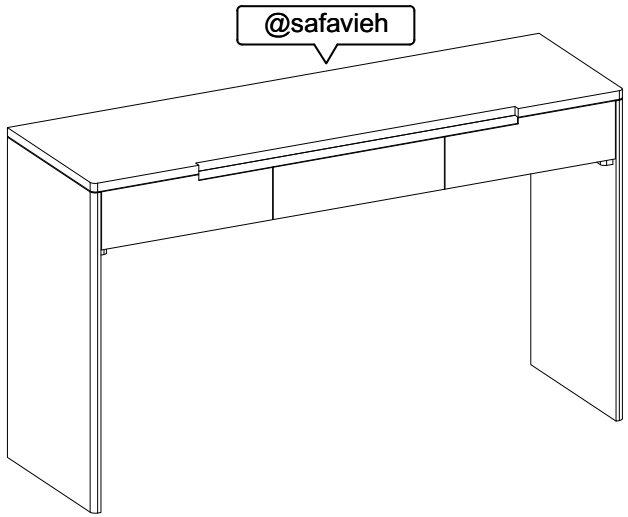
Place the Console table in the place where you will use it. We'd love to see it – just tag us (we're @safavieh) and use the hashtag #safavieh on Instagram!