DINING CHAIR

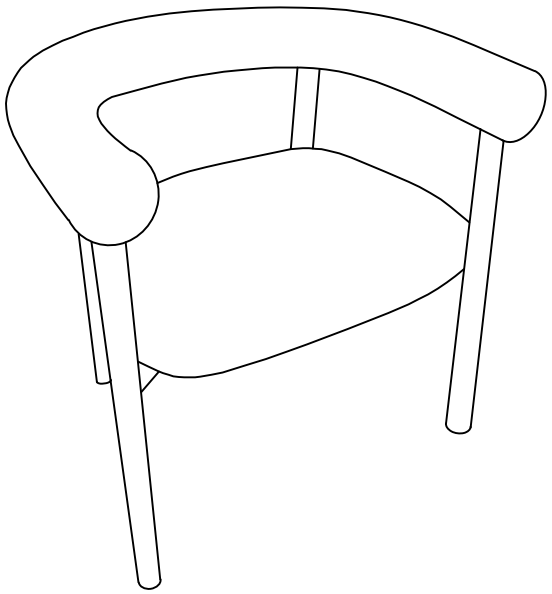

USAGE AND SAFETY INSTRUCTION

- Please read the following instructions carefully and use the product in accordance with the manual.
- Keep the instruction well. Please give the product along with the installation and operating Instructions, if it is for other people to use.
- The warnings, cautions, and instructions listed in this manual may not cover all possible situations that may arise when using the product. Please contact us if you need further information or help.
- This product is not a climbing frame for children's play,which could result in injury. Please do not leave children unattended.
- Check the item for possible damages before use. Do not use it if it is bent, cracked, or damaged.
- Improper loading can cause a tilt of the item.
- The normal functioning of the product can be guaranteed when it is in a vertical and horizontal position. Please always position the product on a level surface.
- Do not place the product near the fire or heat sources! Caution Fire Hazard.
- Be careful of your hands when setting up! We recommend wearing protective gloves for assembly.
- Do not use corrosive cleaners for cleaning!
- It is important that any product which is assembled using any kind of screw is re-tightened 2 weeks after assembly, and once every 3 months - in order to assure stability through-out the lifespan of the product.

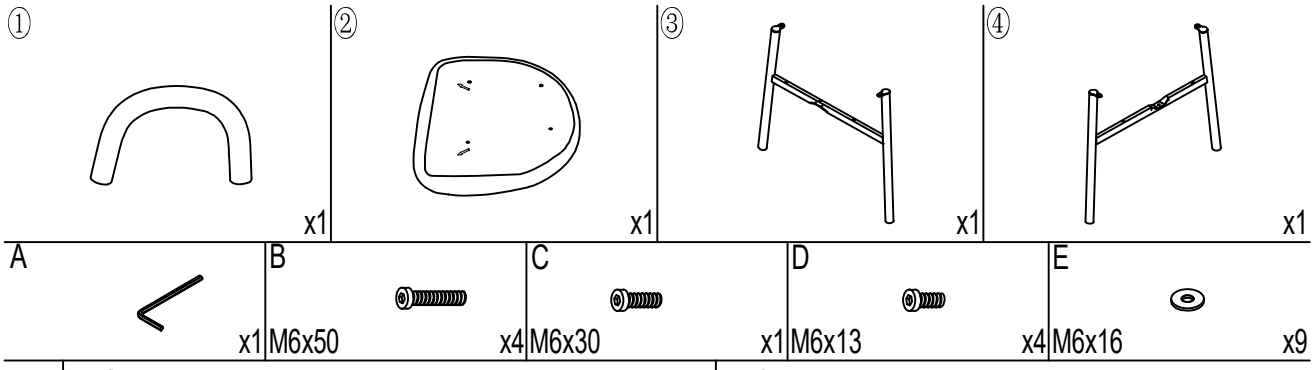

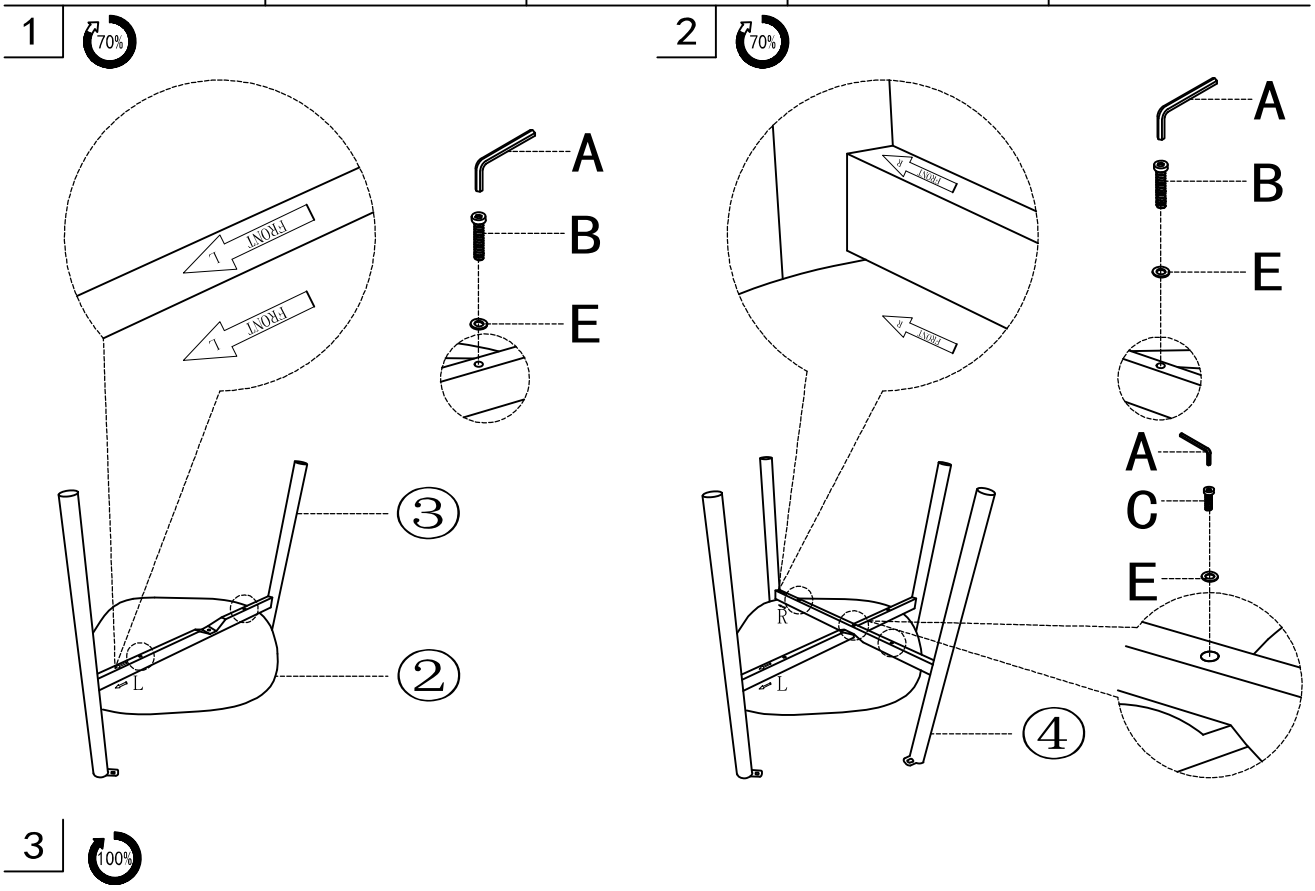

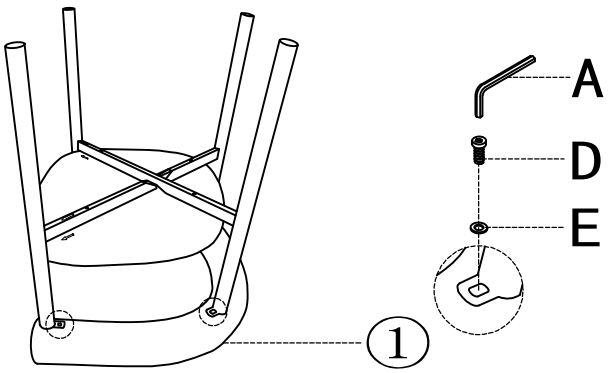

tighten all
the screws to 100% of
maximum tightness

