CONTAINER FLIP MANUAL

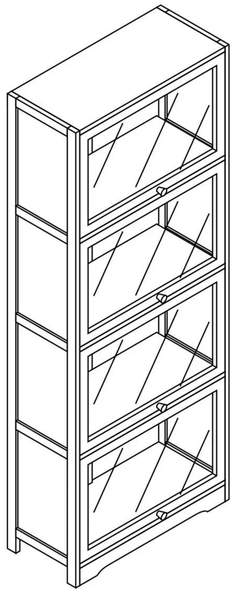

1 x22	2 x16	3 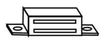 x4	4 x4
5 x4	6 x4	7 x16	8 x1

The assembly method for the first, second, third, fourth, and fifth layers is the same. For other layers, refer to the corresponding components and accessories for installation and make corresponding adjustments.

A

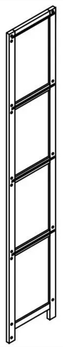

Left bracket x1

B

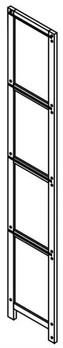

right bracket x1

C

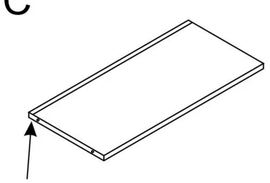

Top plate (single groove) x1

D

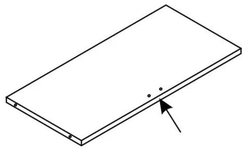

Second layer board (with magnetic suction holes) x1

E

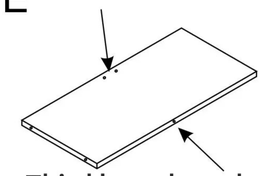

Third layer board (with magnetic suction holes+back single hole) x1

F

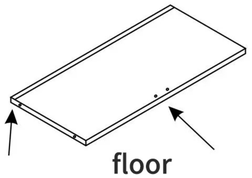

floor (Single slot+with magnetic suction hole) x1

G

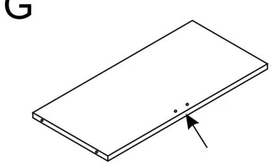

Fourth layer board (with magnetic suction holes) x1

H

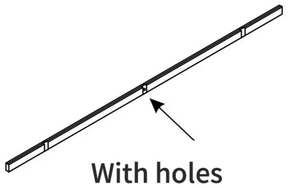

With holes x2

J

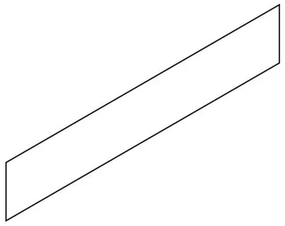

x3

K

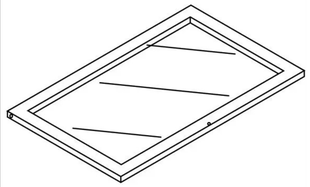

x4

L

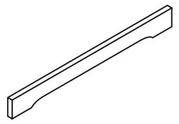

x1

01

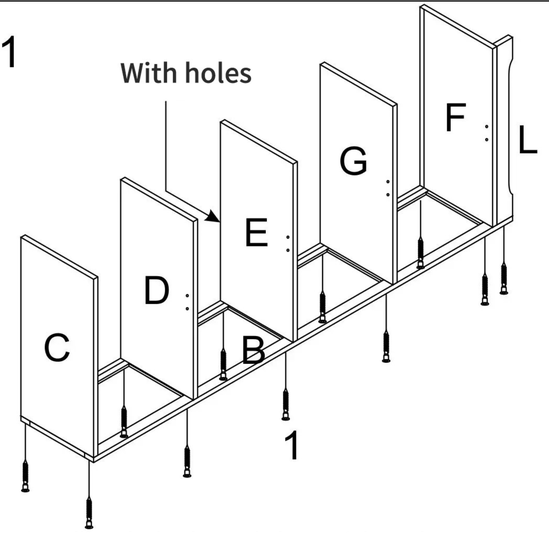

Before installing the back panel, do not tighten the screws too tightly. After the back panel is installed, reinforce the screws.

02

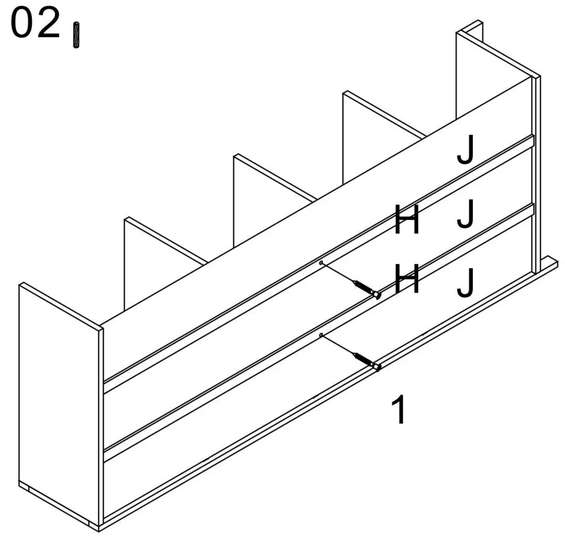

03

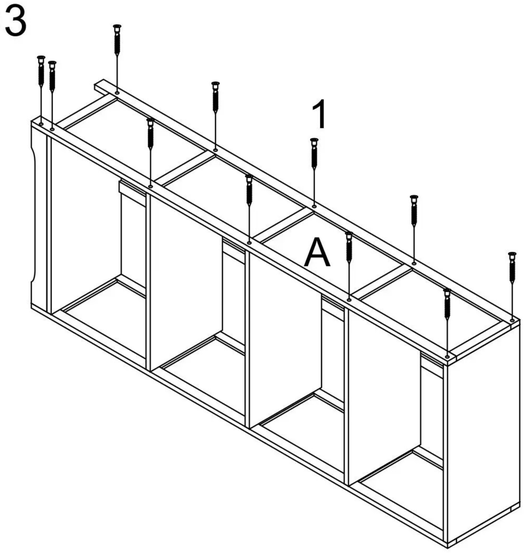

04

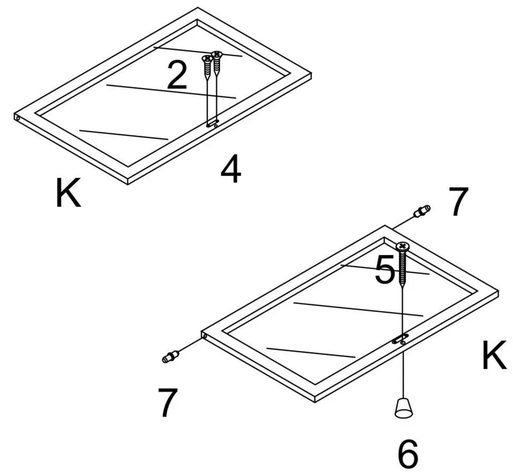

05

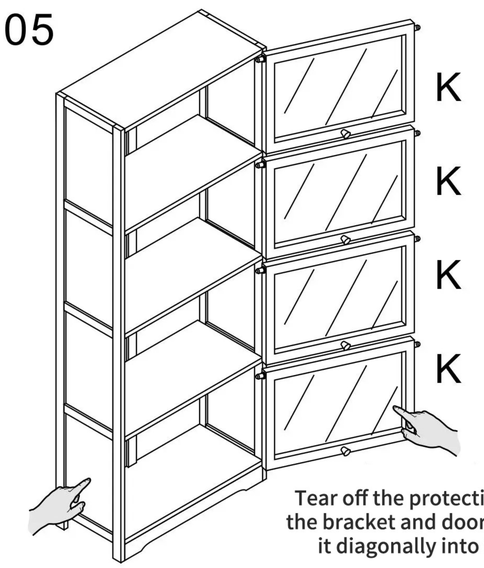

Tear off the protective film on the bracket and door and insert it diagonally into the slot
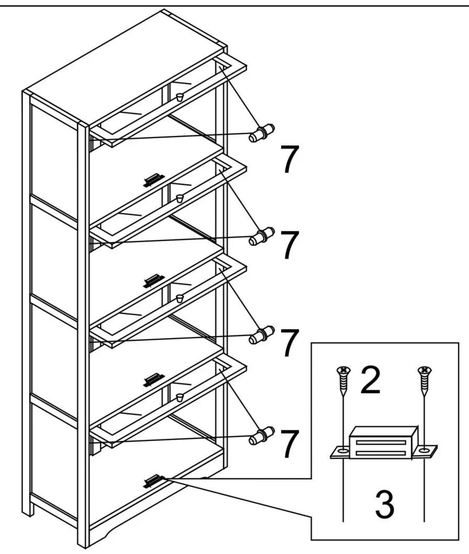
06