Assembly Guide

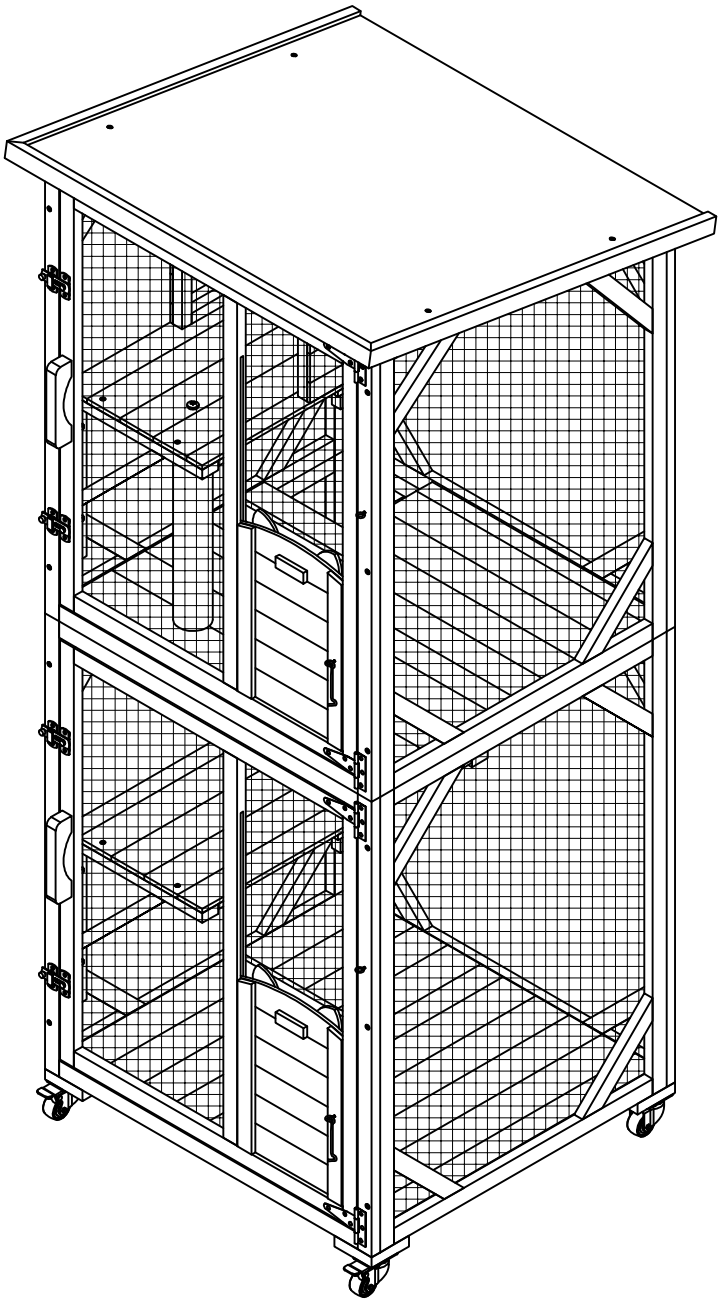

READ AND SAVE THIS INSTRUCTIONS FOR FUTURE USE

ASSEMBLY & INSTRUCTION MANUAL

PART LIST

Ax1

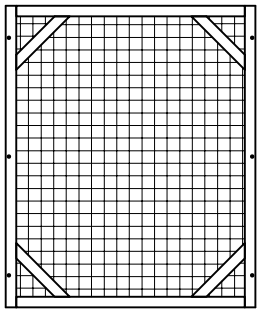

Bx1

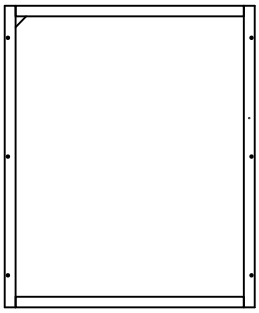

Cx1

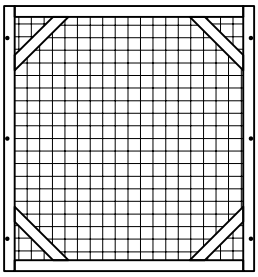

Dx1

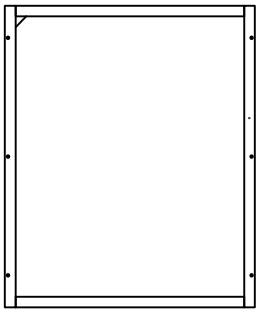

Ex1

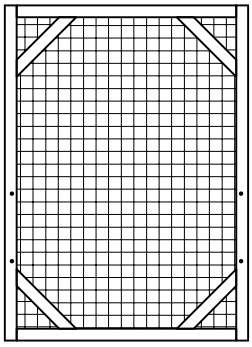

Fx1

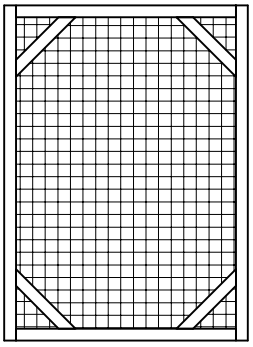

Gx1

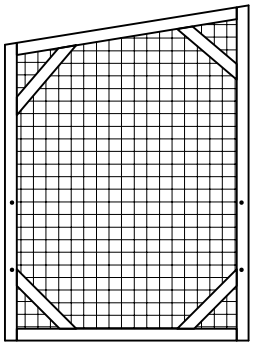

Hx1

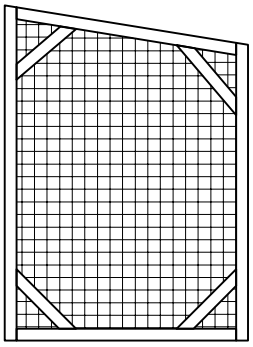

Ix2

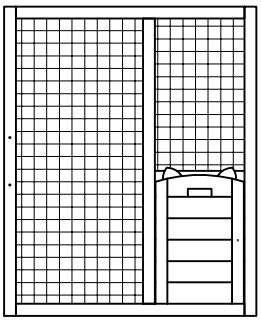

Jx1

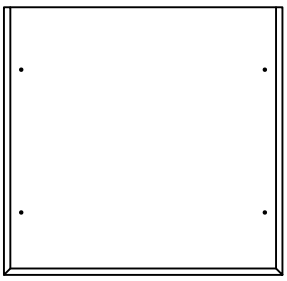

Kx1

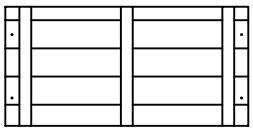

Lx1

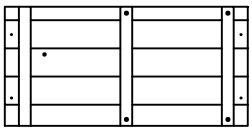

Mx1

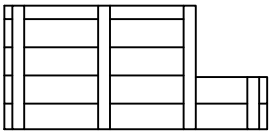

Nx1

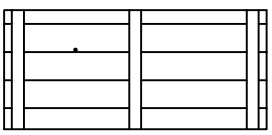

Ox2

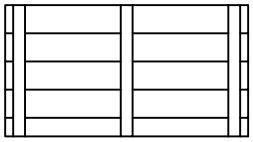

Px1

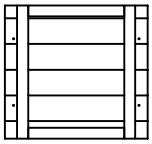

Qx2

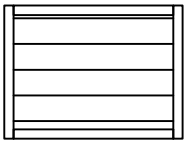

Rx1

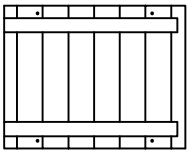

Sx1



Tx4

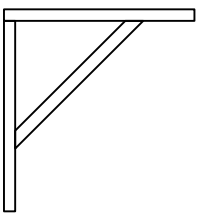

Ux4

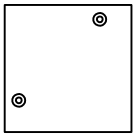

Vx2



PART LIST

①x16+1 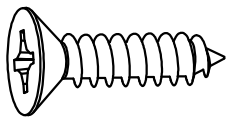 M3*12mm	②x24+2 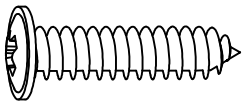 M3*16mm	③x16+1  M3.5*20mm
④x16+1  M3.5*25mm	⑤x4  M3.5*30mm	⑥x36+2  M3.5*35mm
⑦x8+1  M3.5*50mm	⑧x4 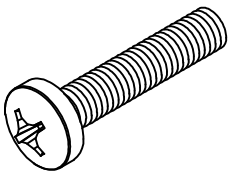 M6*30mm	⑨x8+1 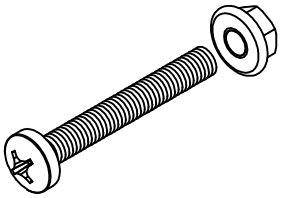 M6*45mm
⑩x2 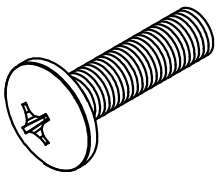 M8*35mm	⑪x26+2 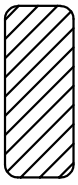 wood stick ϕ8*20mm	⑫x4 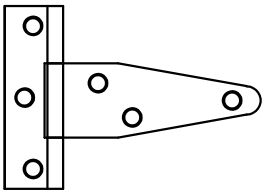
⑬x4 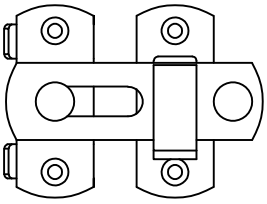	⑭x2 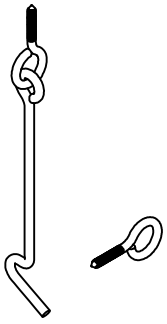	
⑮x2 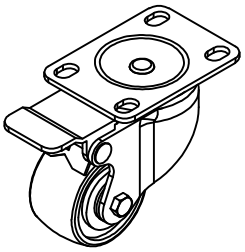	⑯x2 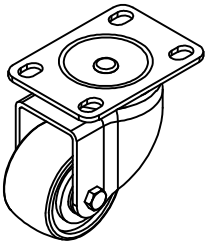	

01

Ax1
Bx1
Cx1
Dx1
⑦x4
⑪x4

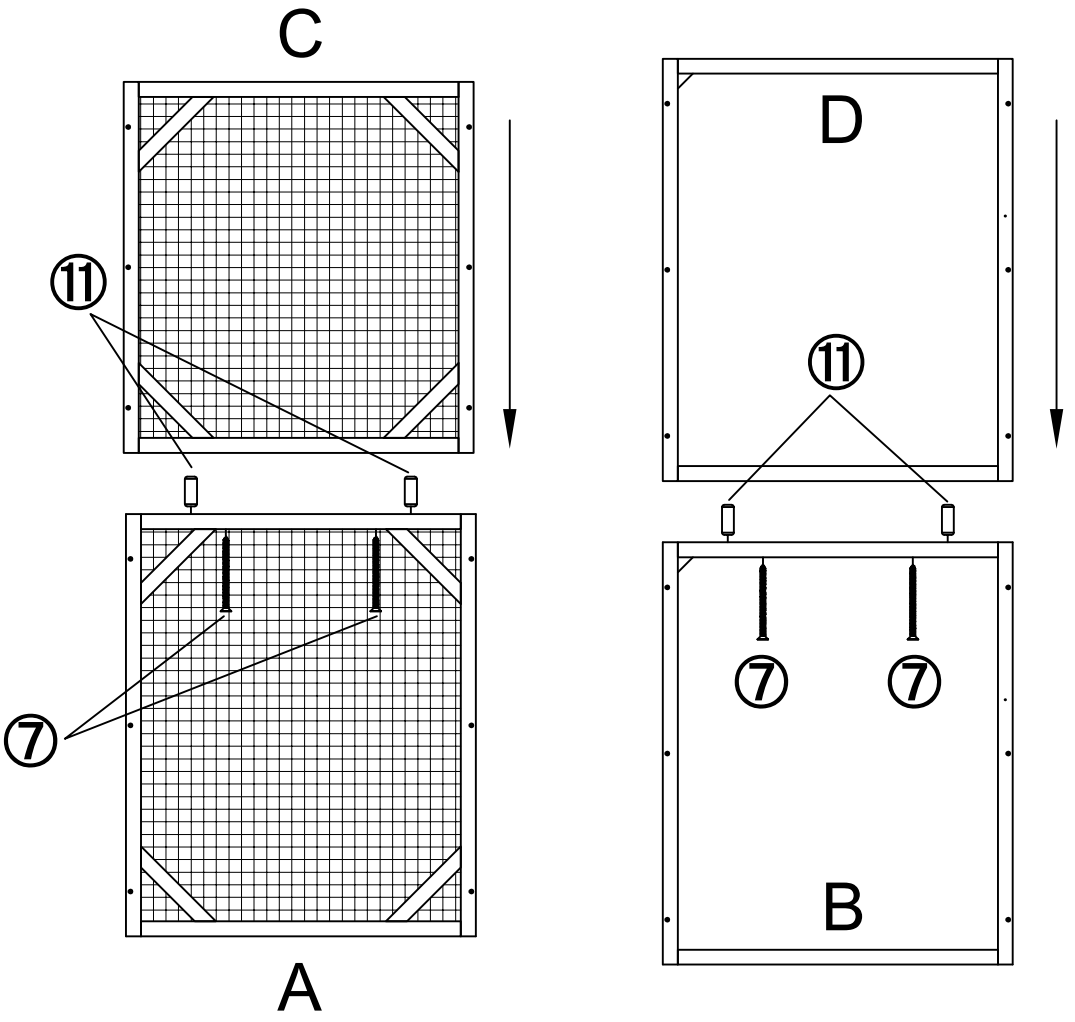

02

Ex1
Fx1
Gx1
Hx1
⑦x4
⑪x22

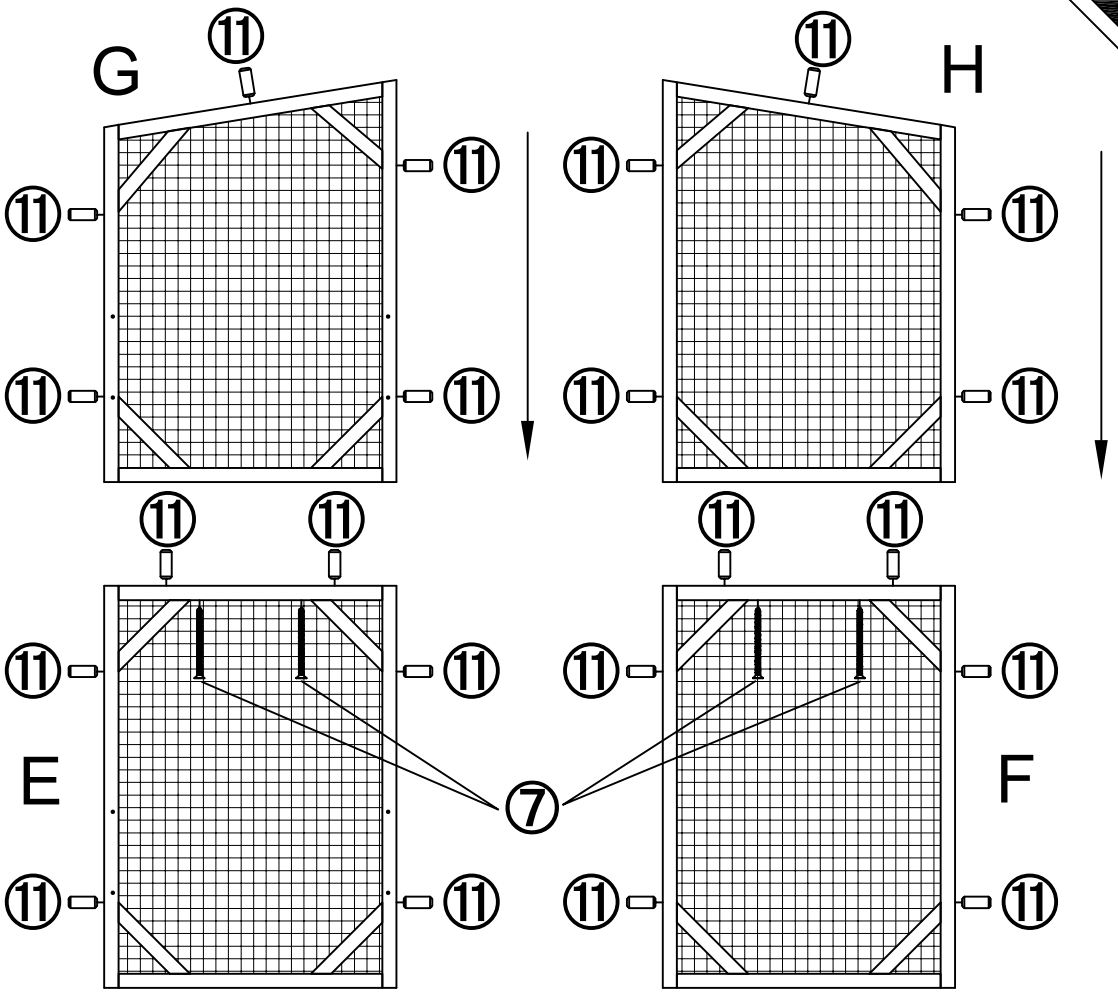

⑥x12

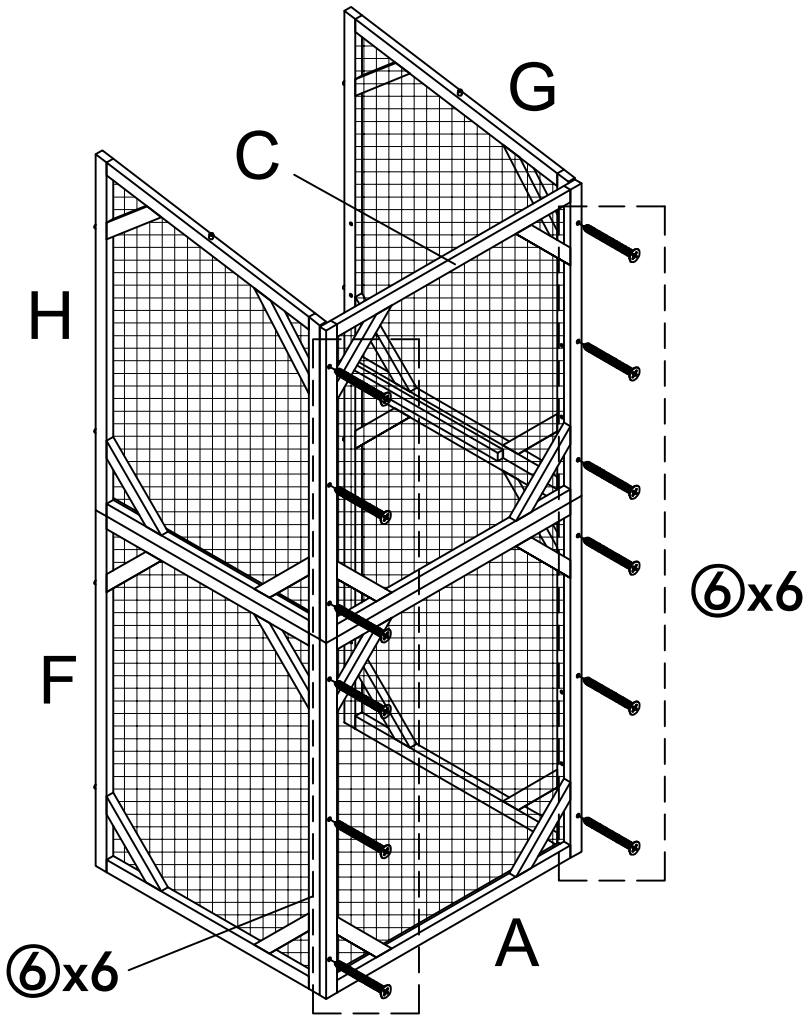

Ix2
Vx2
②x24
⑧x4
⑫x4

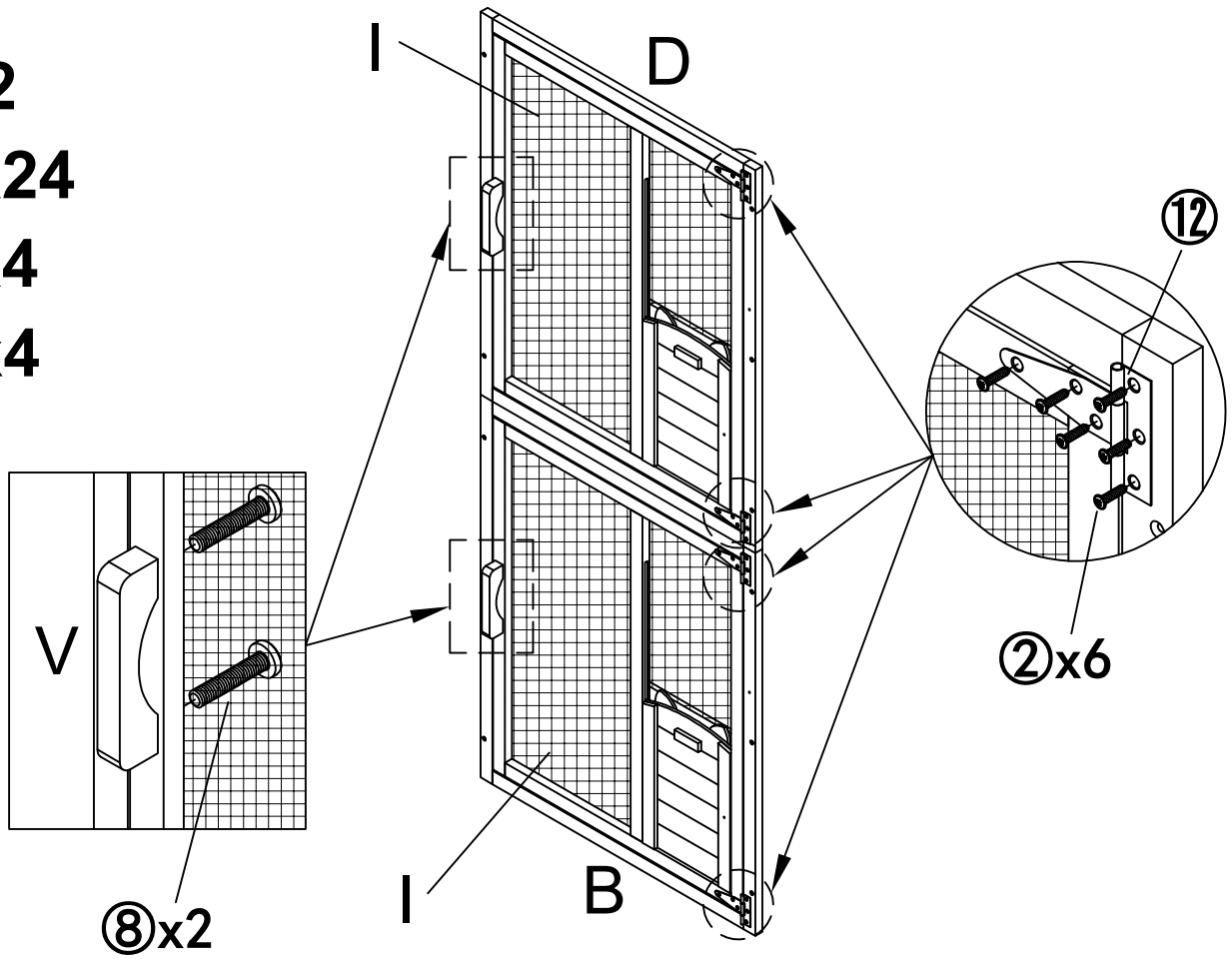

05

Tx4

⑨x8

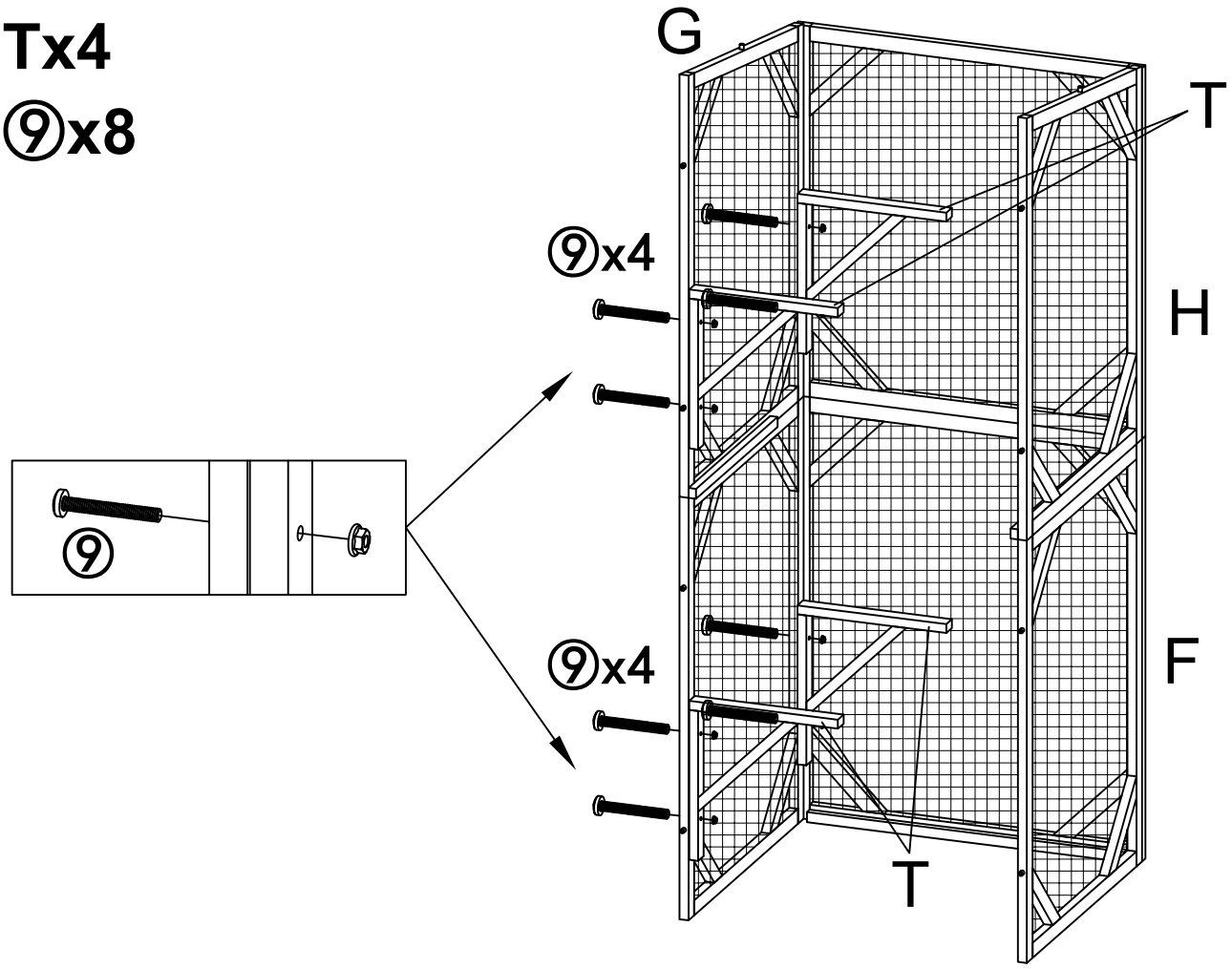

06

Kx1

Lx1

④x8

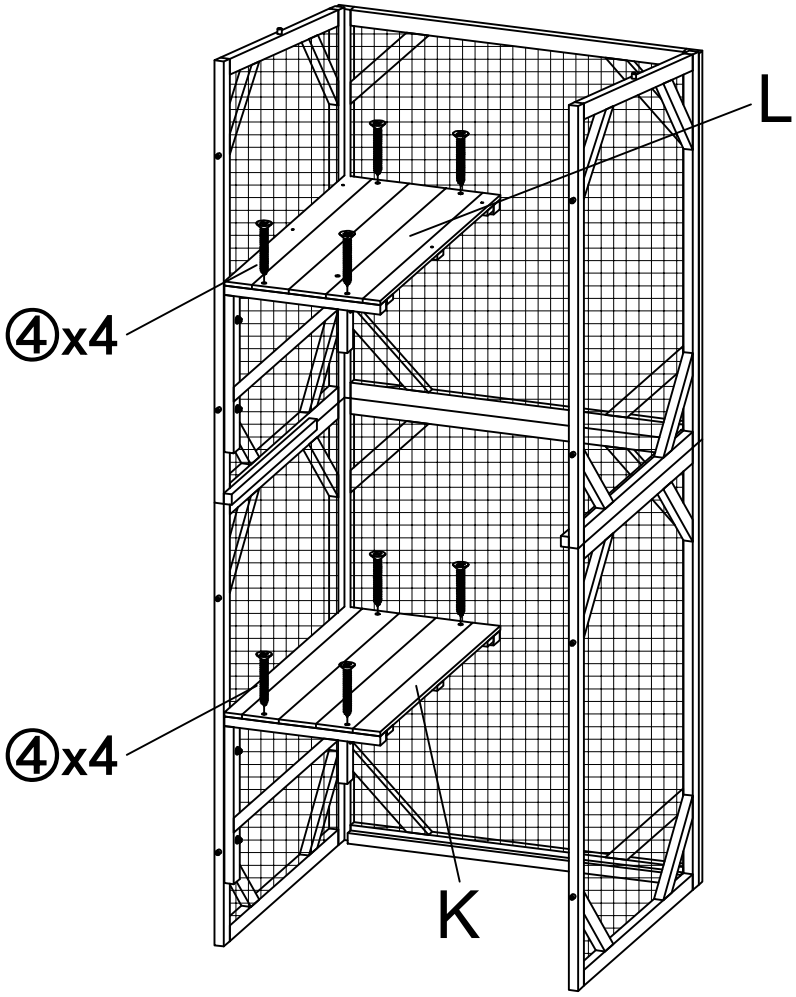

Px1
Qx2
Rx1
④x8

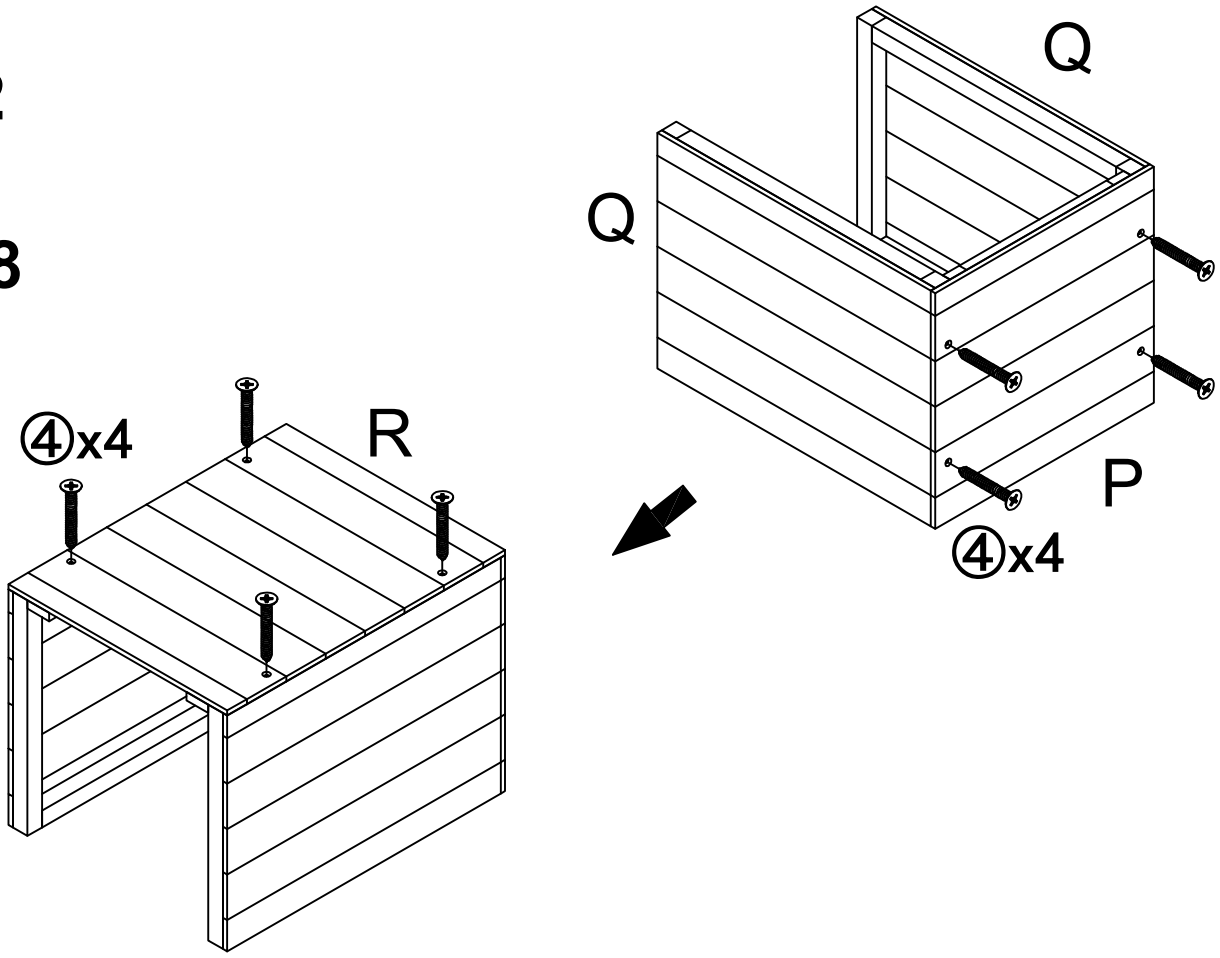

⑥x4

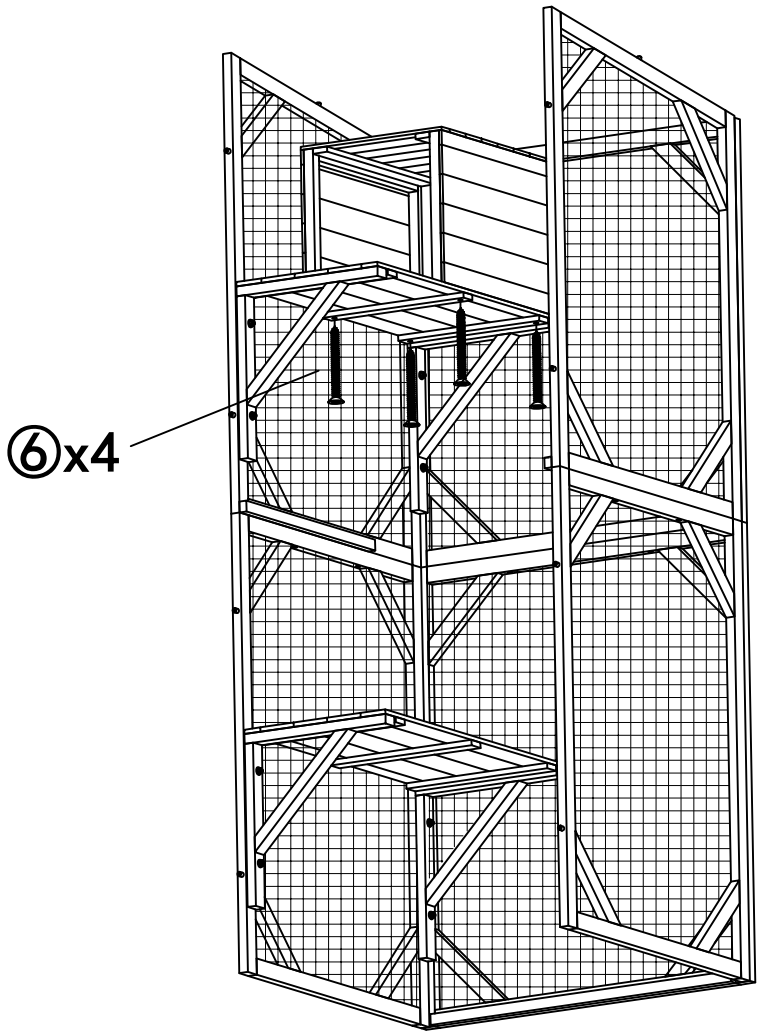

⑥x12

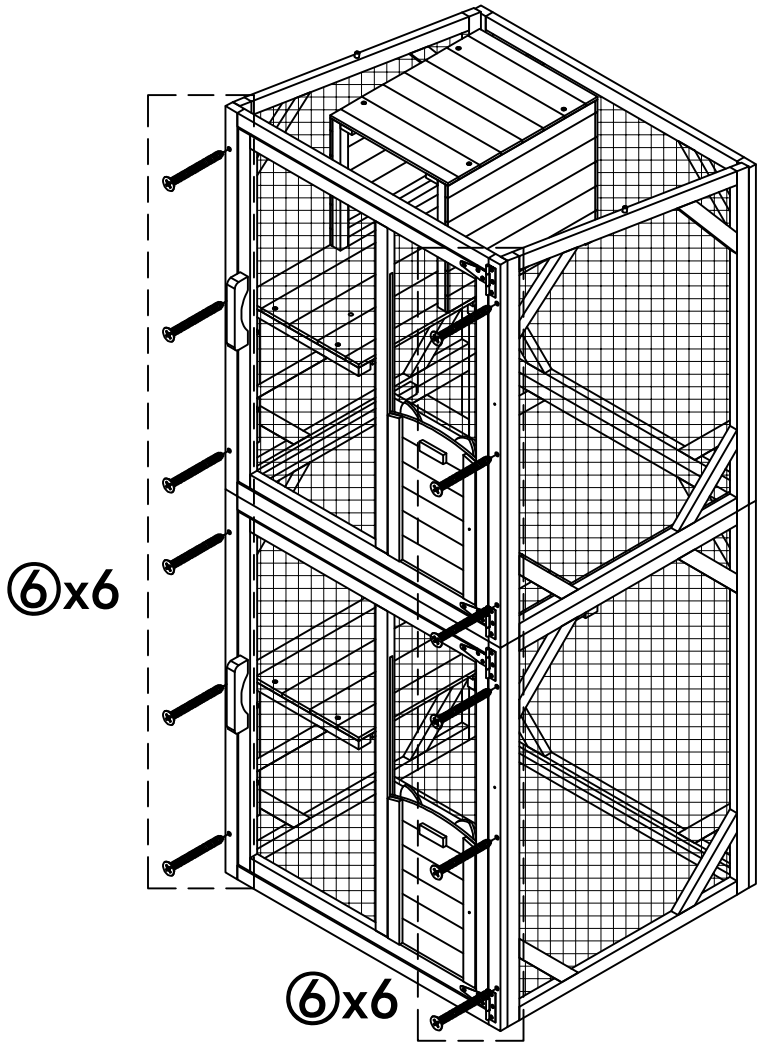

Ux4

⑥x8

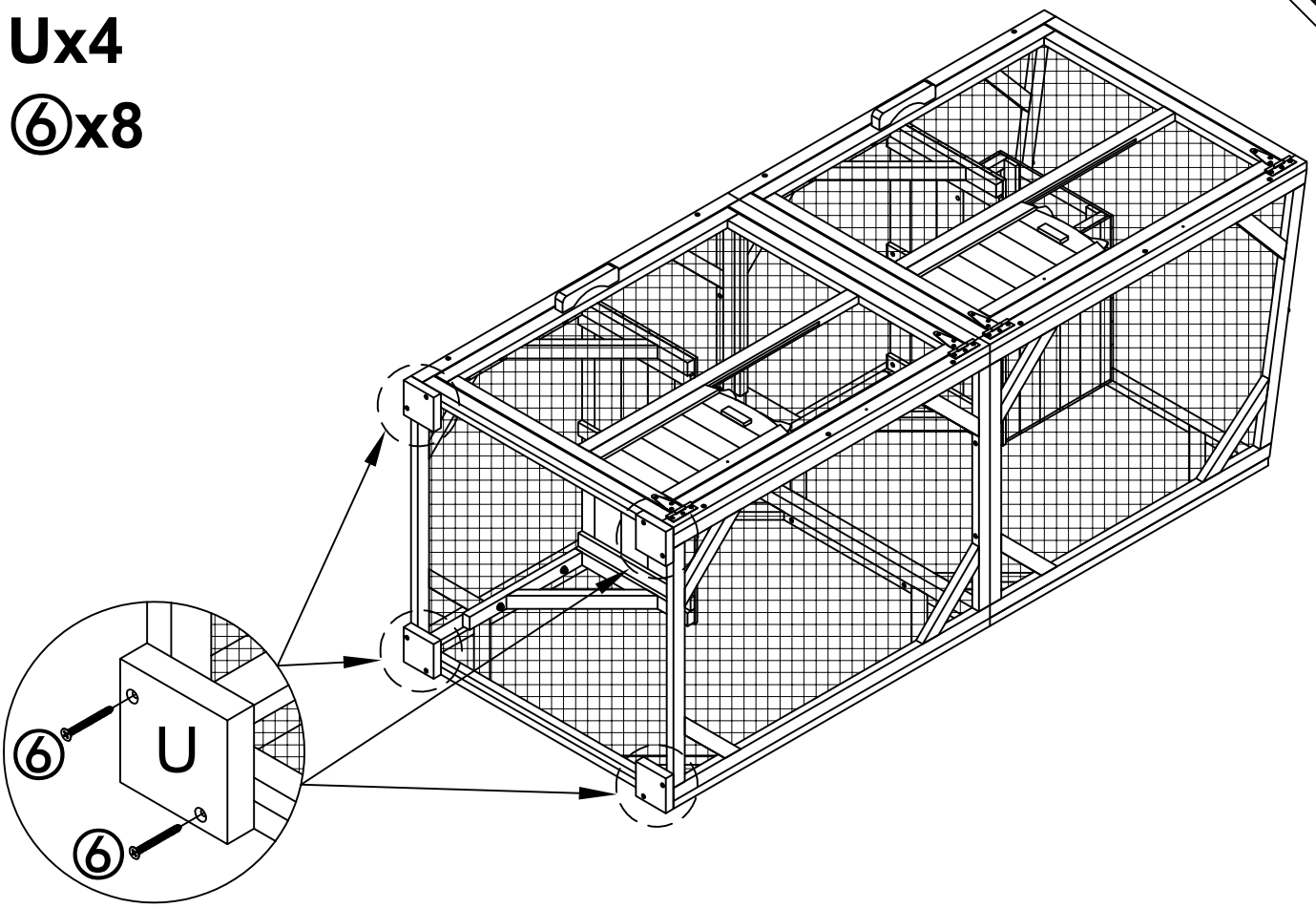

③x16
⑮x2
⑯x2

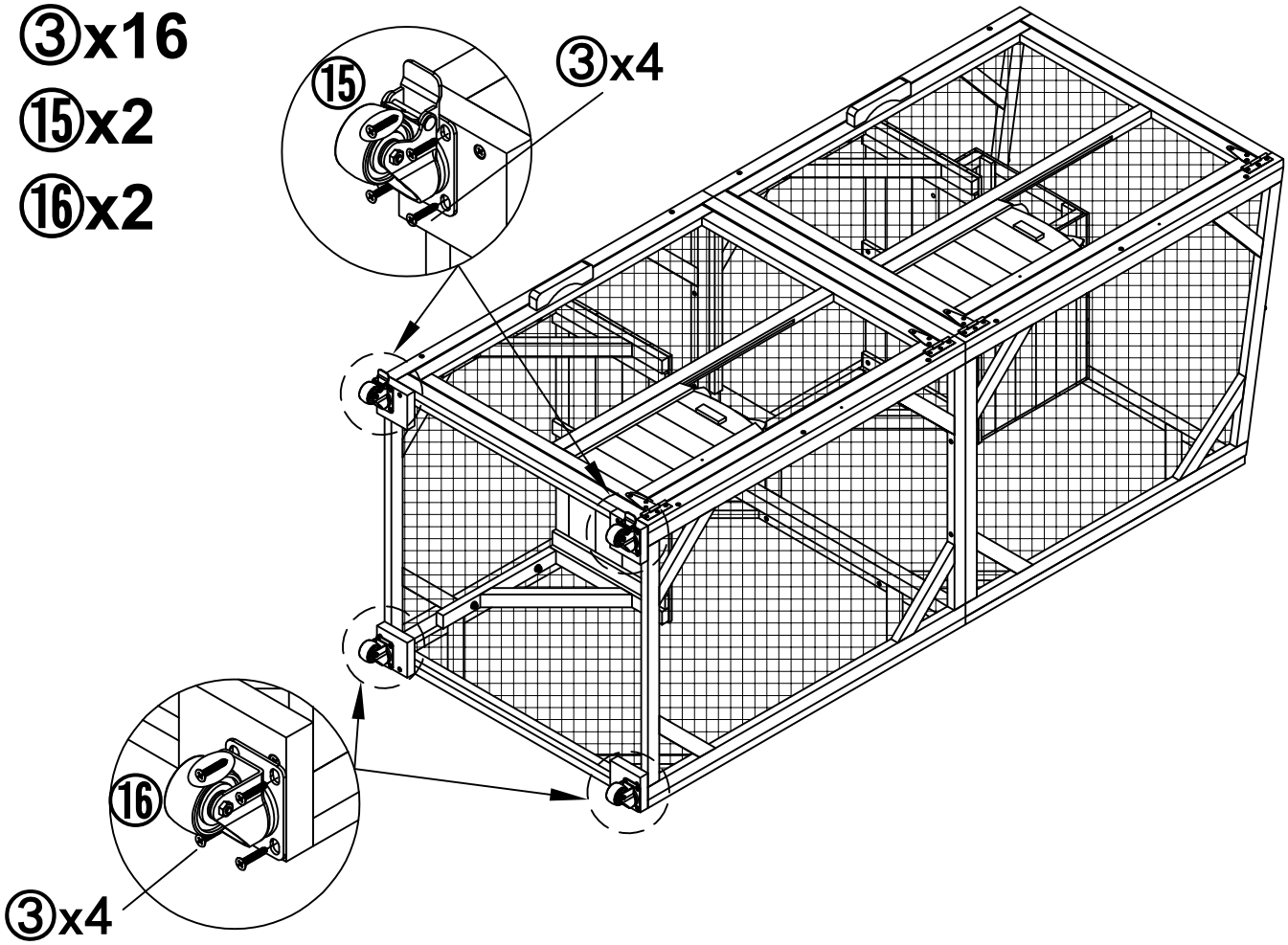

Mx1
Nx1
Ox2

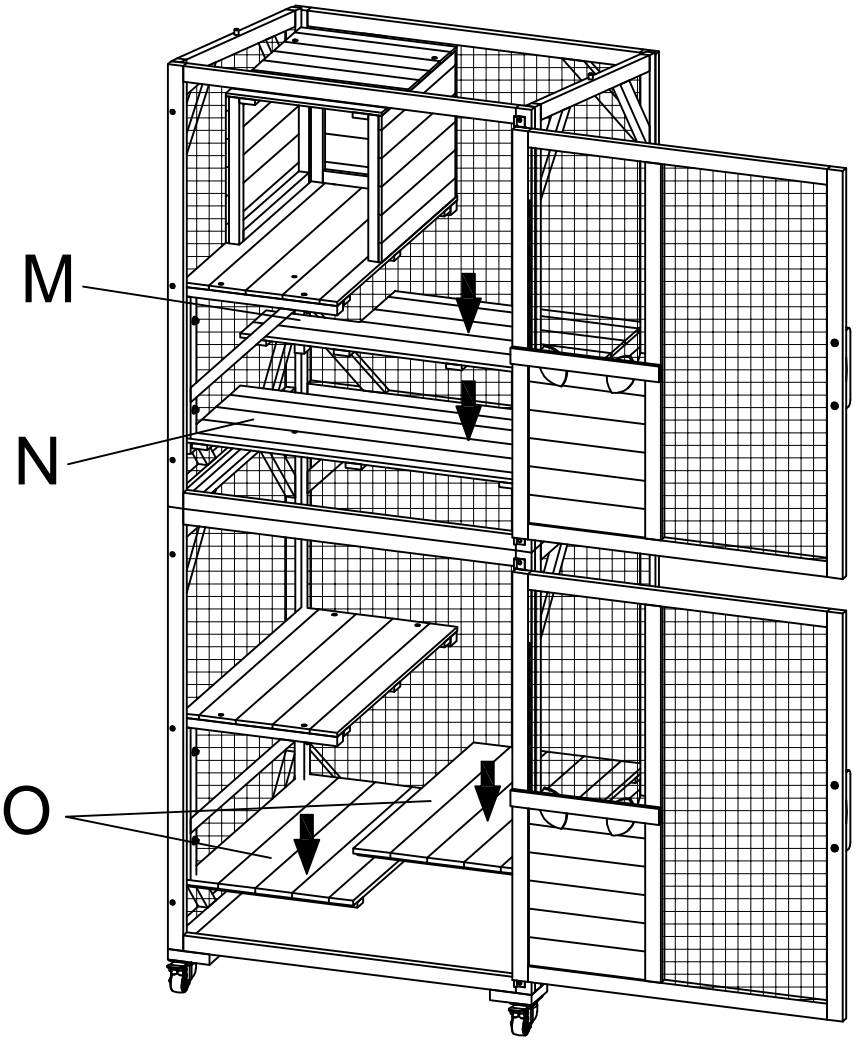

Sx1

⑩x2

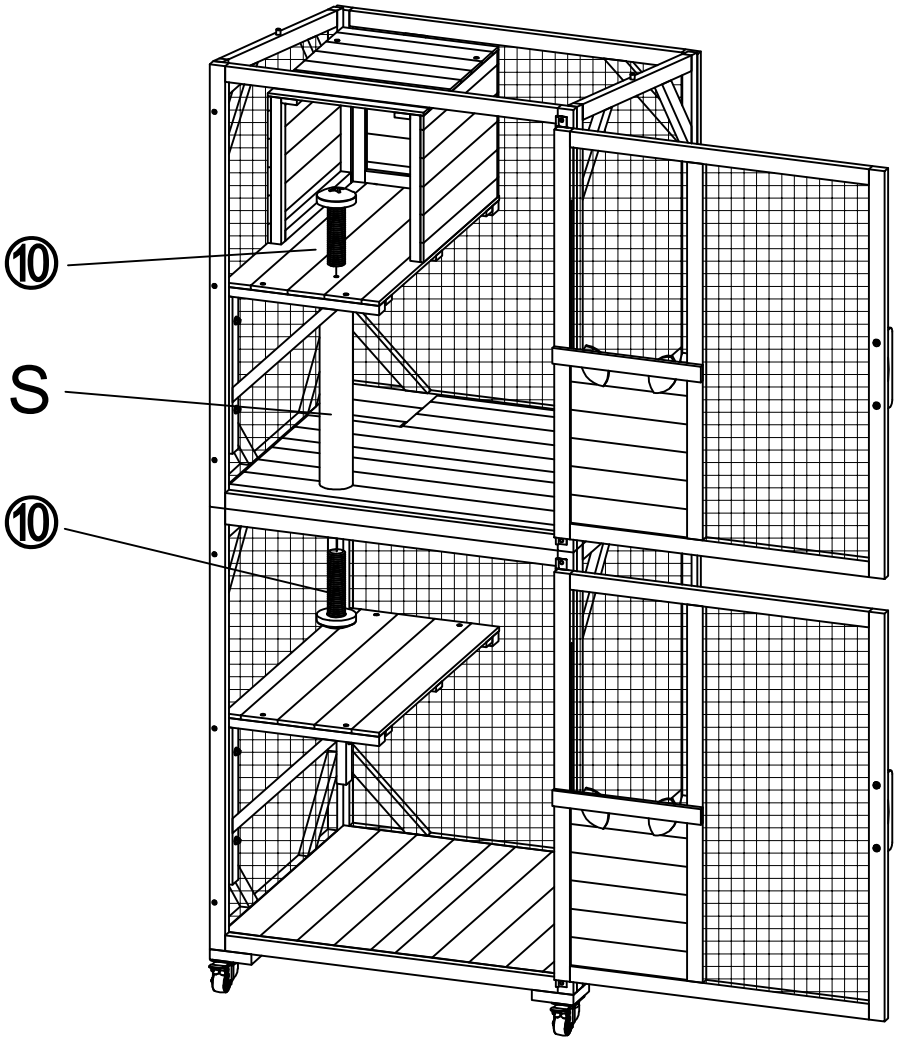

Jx1

①x16

⑤x4

⑬x4

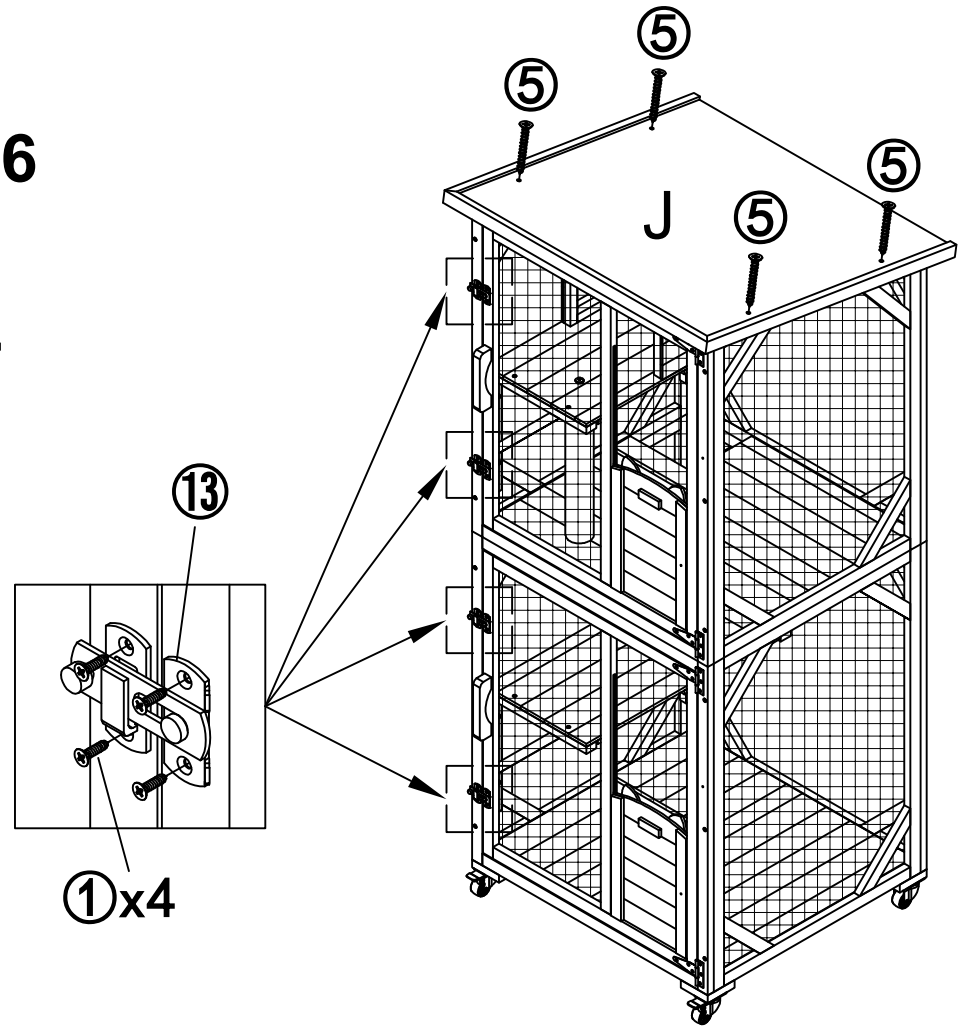

⑭x2

