NO.	Parts	Quantity
①	Leg	330x260x40=3
②	Faceplate	Φ760x25=1
③	Small round table	Φ650x230=1
NO.	Parts	Quantity
A		6
B	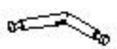	6
C		Φ15x12=18
D		Φ6x34=6
E	Glue	12

①

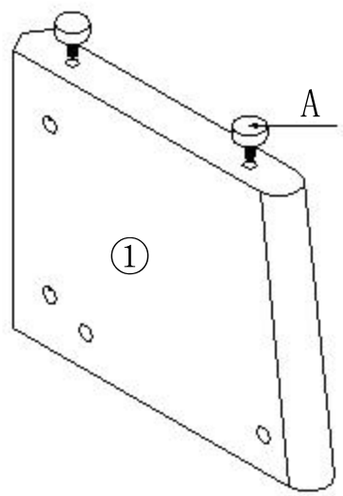

②

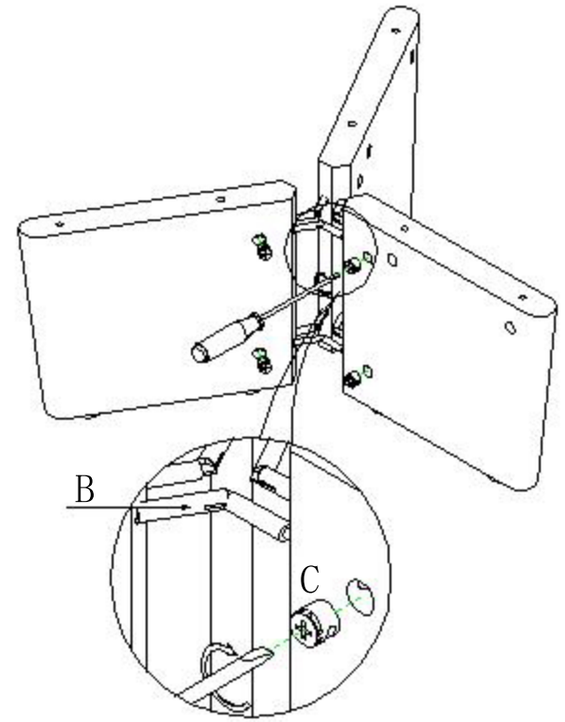

③

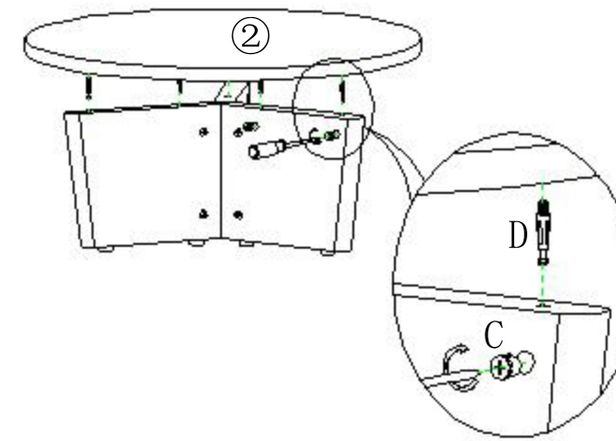

④

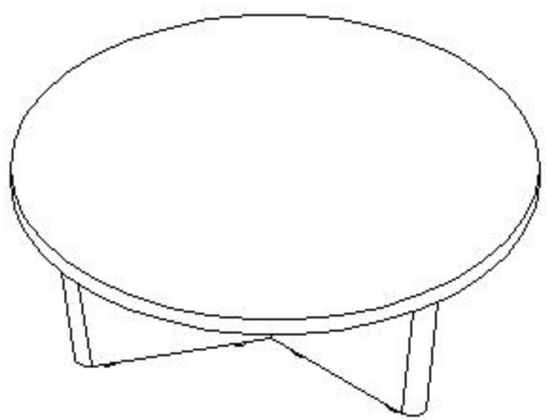

⑤

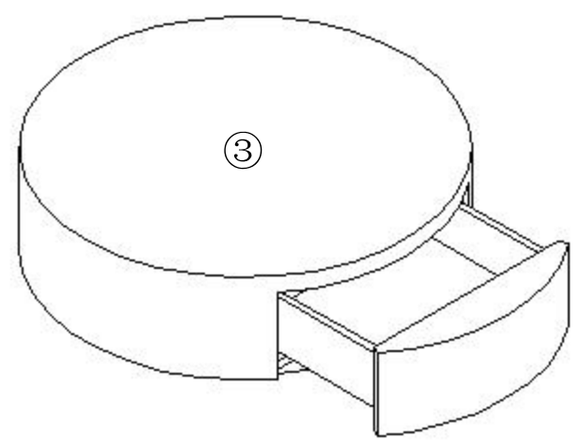
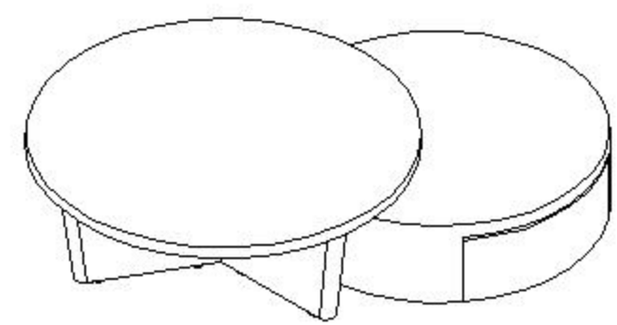
⑥