DIMENSIONS

Rough-In Dimensions

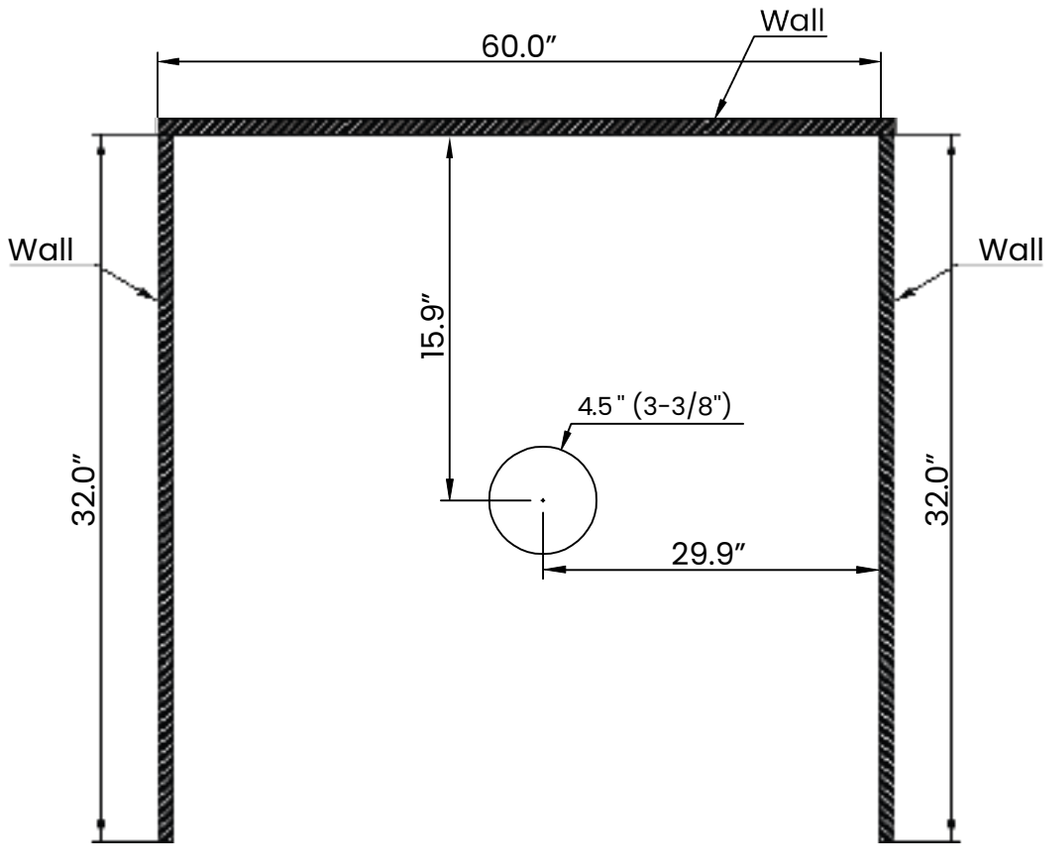

Product Dimensions

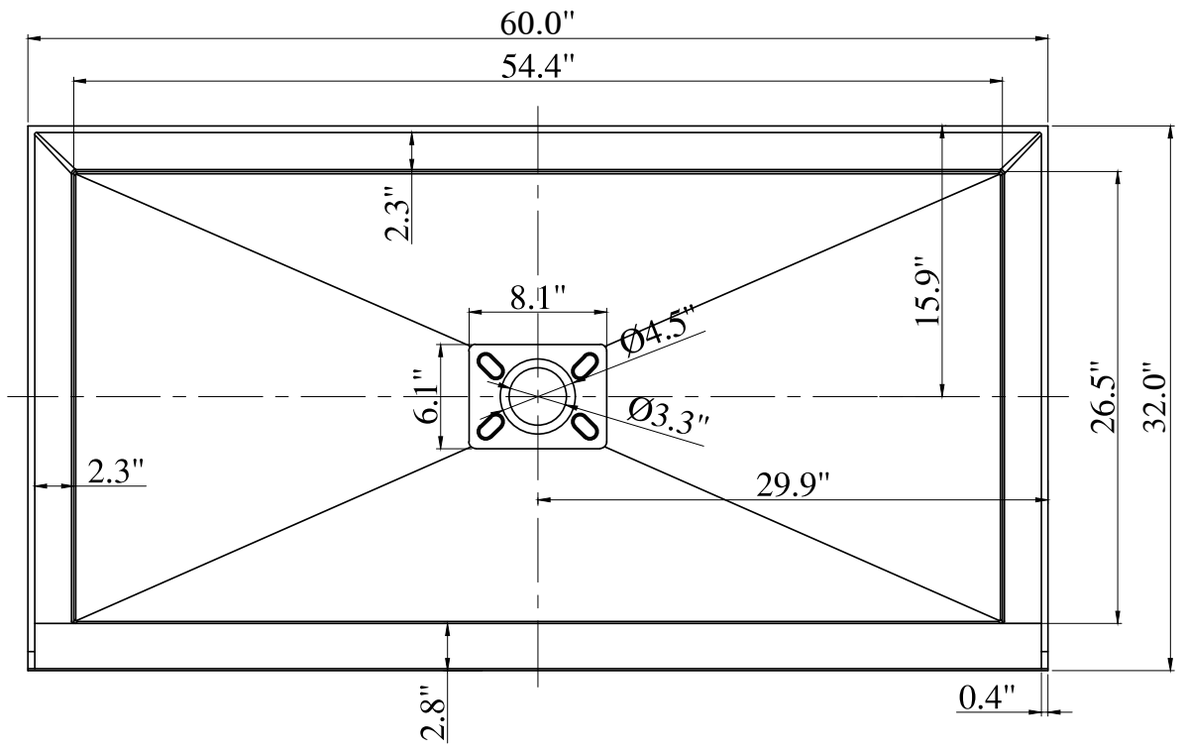

Model number:
GB-2533-136-BL

DIMENSIONS

Streamline

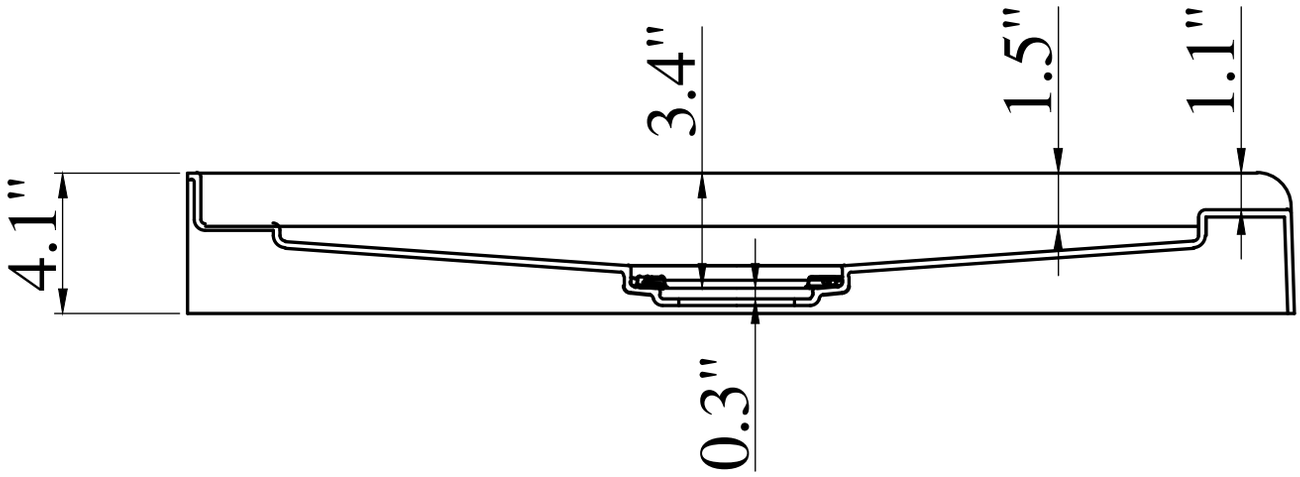

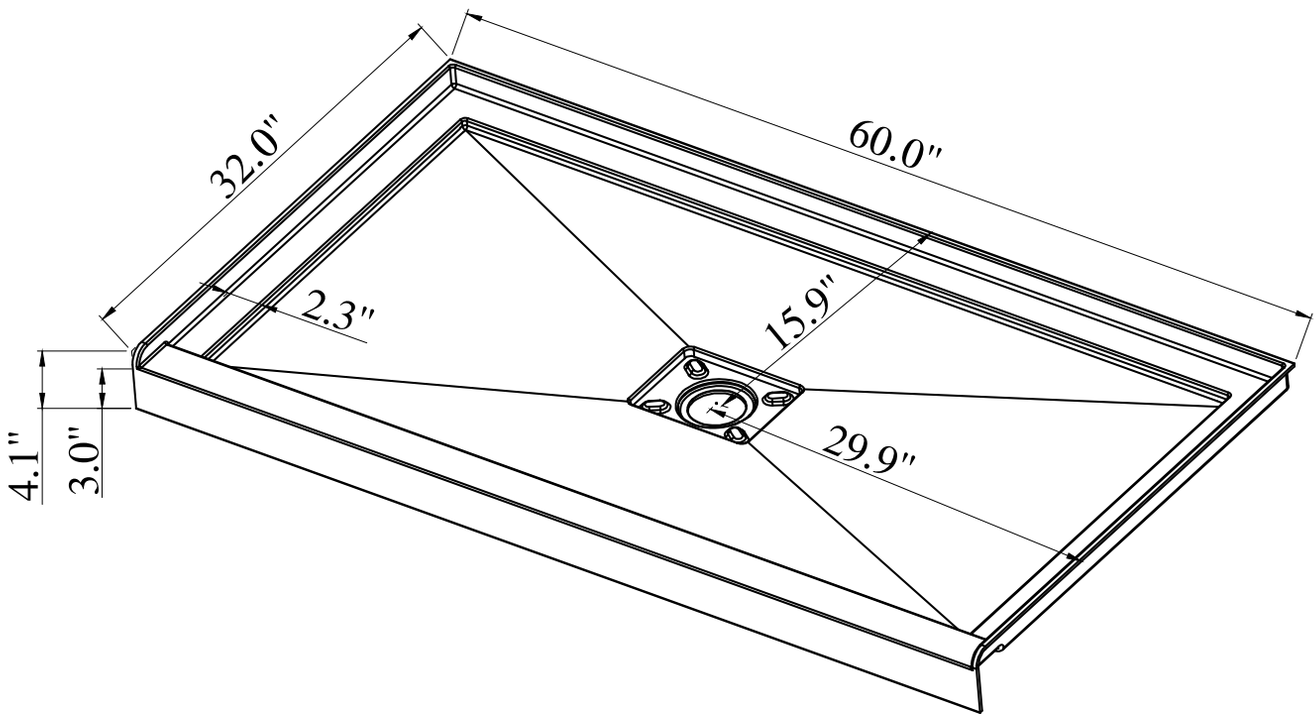

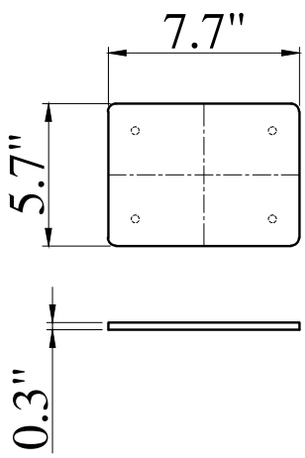
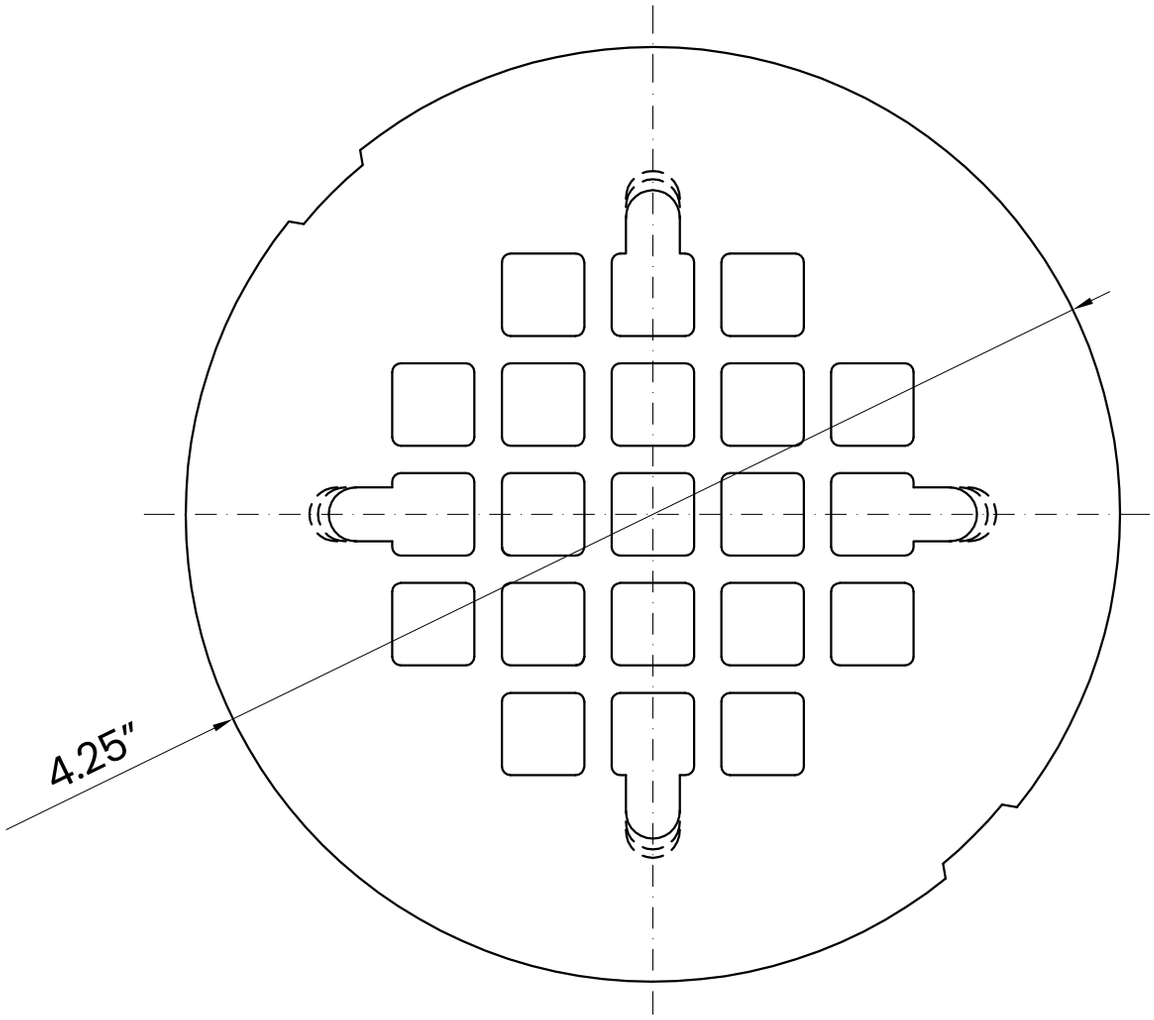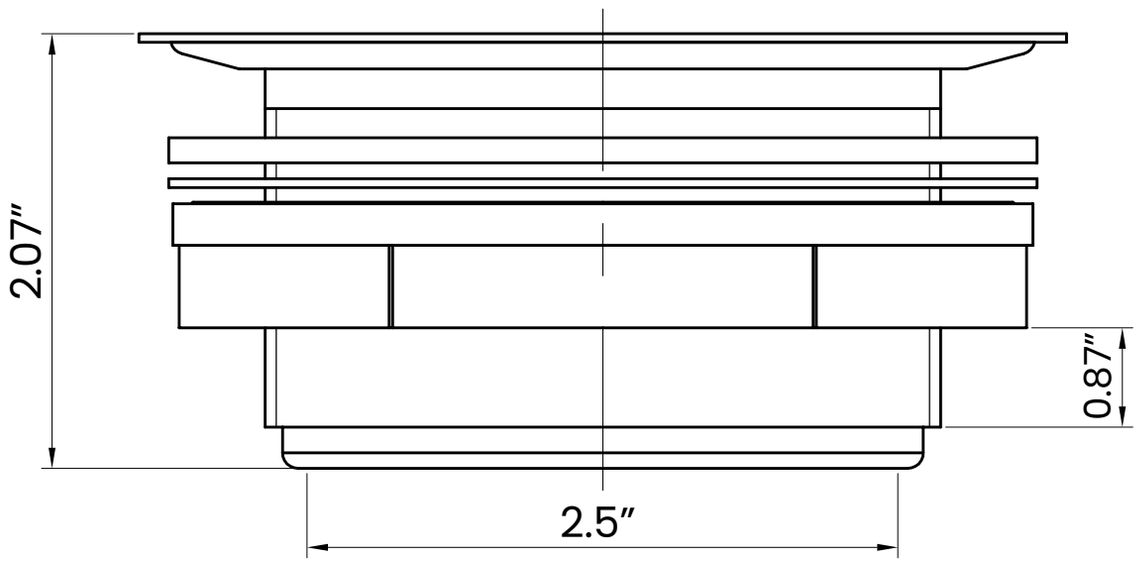
DIMENSIONS