Installation User Manual

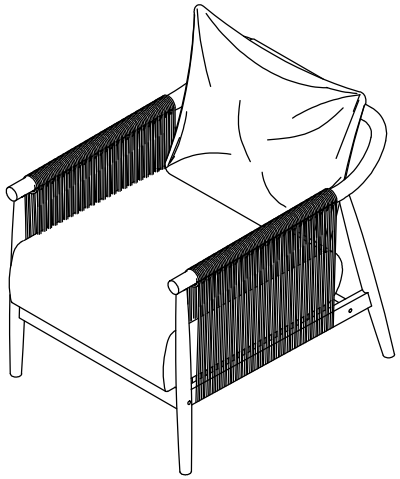

① ×1	② ×1	③ ×1
④ ×1	⑤ ×1	⑥ ×1

A ×4	B ×4	C ×6	D ×2
E ×4	F ×4	G ×1	Not Included

STEP 1

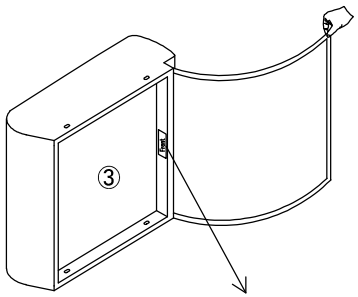

Front Label: This isthe front side of the seat.

STEP 2

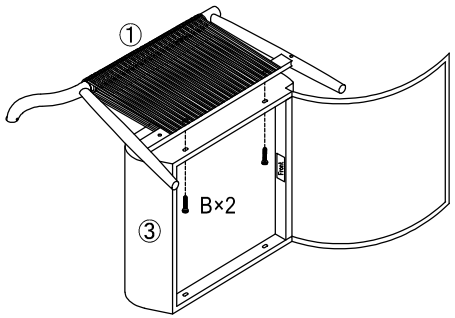

STEP 3

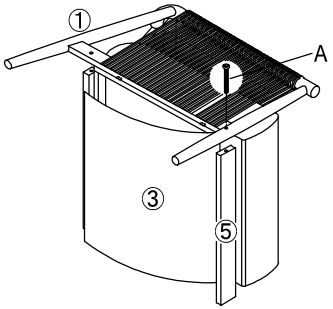

STEP 4

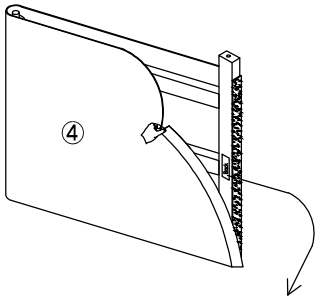

Back Label: This is the backside of the back frame.

STEP 5

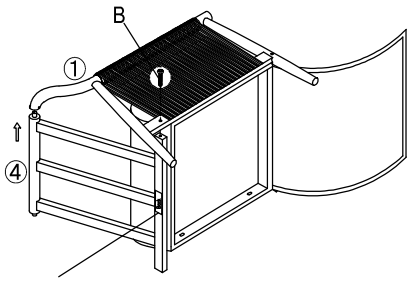

Back Label: This is
the back side of the back frame.

STEP 6

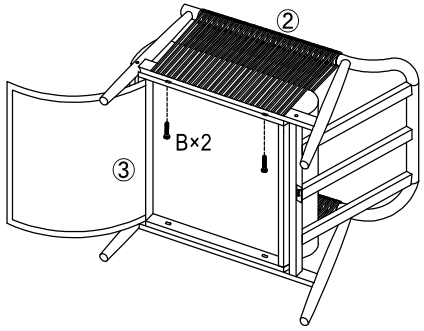

STEP 7

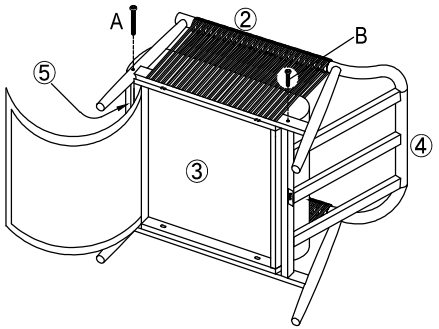

STEP 8

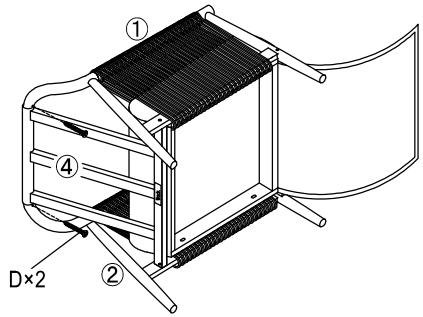

STEP 9

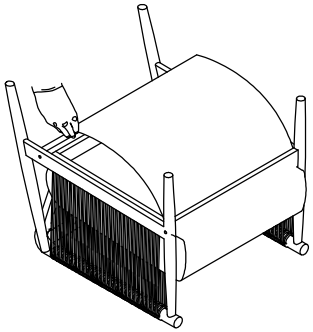

Attach the Velcro underneath the Seat ③ as indicated below.

STEP 10

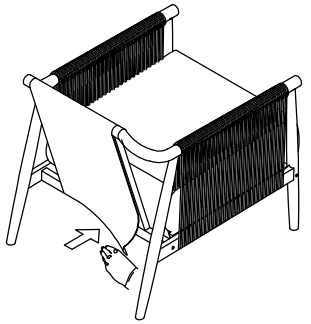

Attach the Velcro on back cover as indicated below.

STEP 11

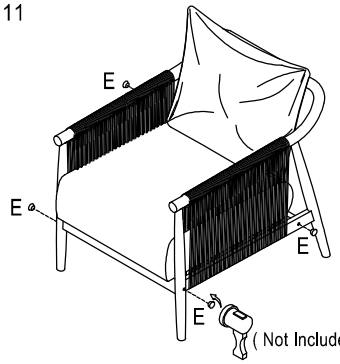

(Not Included)

STEP 12

