User's Manual

Bed Frame

Note:

1. Should be assembled on flat ground to keep balance.
2. Before completing the installation, do not tighten the screws.
3. Please contact after-service directly for any breakage problem of the product, we will provide you with satisfactory service.

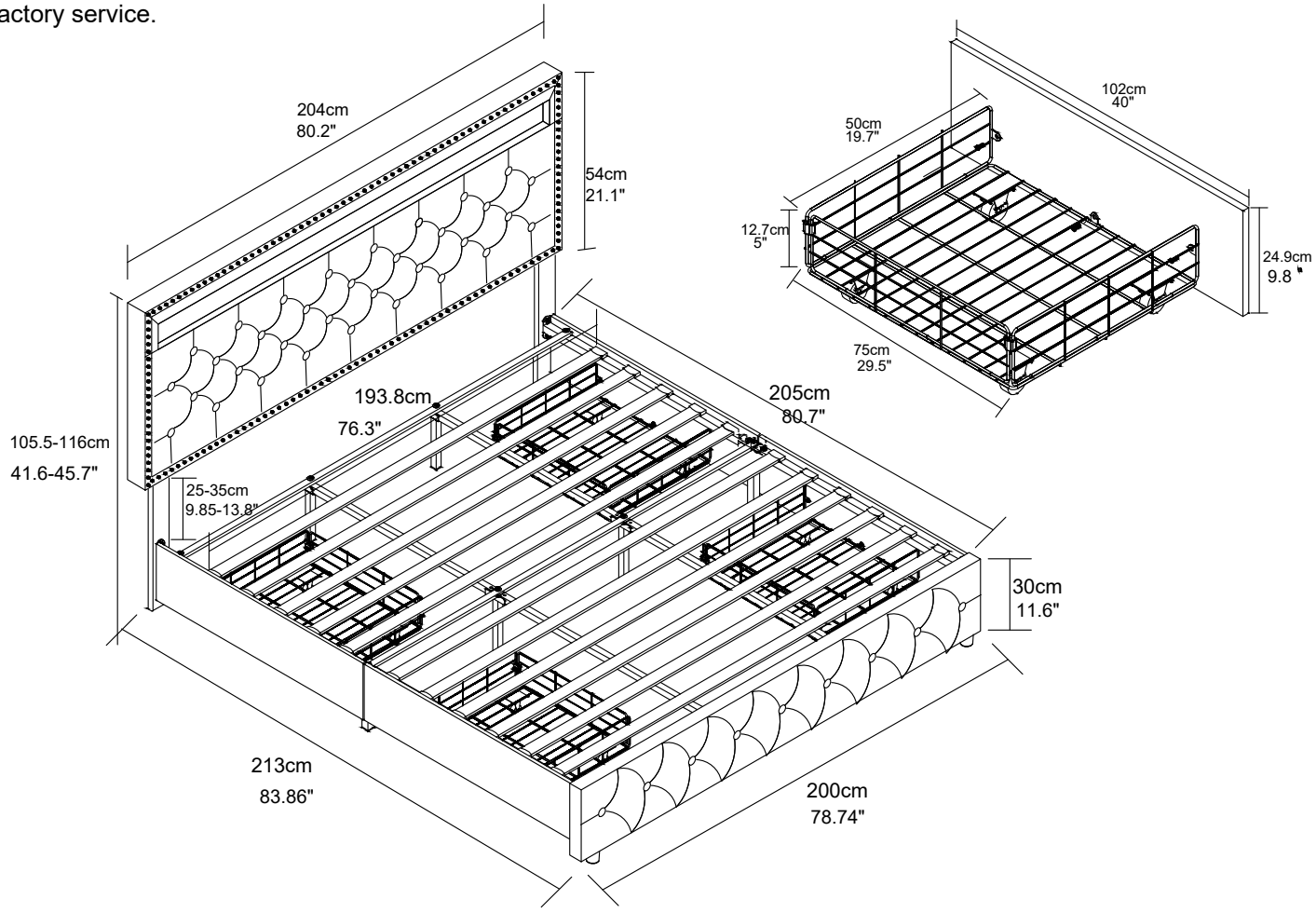

Before starting the assembly, you must read the whole manual and follow the instructions

It needs at least two people to install.

267K-

W267KPB / W267KPW / W267KVB / W267KVC / W267KVG V1.0

Thank You for Choosing Our Furniture!

Return & Support Instructions

DO NOT RETURN TO THE STORE! Contact us directly for quicker assistance.

- **Missing or Damaged Parts:** Occasionally, warehouse handling or shipping may not be as careful as we'd like.If any parts are missing or damaged, **we'll send replacements at no extra cost.**
- **Quality Concerns or Defects:** If the product doesn't meet your expectations or has any defects, you can reach out to us directly through the platform or via email at FuirnexAfterService@outlook.com with your order details and a description of the issue. No matter how you contact us, **we'll respond within 24 hours to assist you.**

Before You Start Assembly

1. **Read the Instructions Thoroughly**: Make sure to review the entire manual from start to finish before beginning.
2. **Have Assistance Ready:** Depending on the product size, two or more adults may be needed for safe and efficient assembly.
3. **Keep Packaging:** Retain all packaging materials until the assembly is complete and you've confirmed that all parts are intact.
   Note: Please ensure your hands are clean when opening the internal packaging. If you encounter any stains that can't be cleaned, don't worry—contact us for assistance.
4. **Assembly Tools**: Our package includes convenient assembly tools, so there's no need to purchase anything extra. However, if you have your own preferred tools at home, feel free to use them.

Safety Precautions During Assembly

- **Stable Surface:** Ensure that the product is placed on a flat, stable surface during assembly to avoid accidents or damage to the product.
- **Keep Sharp Objects and Small Parts Away from Children:** Please keep sharp tools and small components out of reach of children to prevent any accidents.

Assembly Guidelines

If you experience any difficulties during assembly that prevent you from continuing:

- **Safely Store All Parts:** Ensure all components are stored in a secure place to avoid loss.
- **Contact Us for Help:** Reach out to us immediately, and we'll provide the support you need to resolve the issue.

Important: Some key parts may be stored in hidden compartments within the product, such as **inside the headboard**. Please inspect these areas carefully to ensure no parts are overlooked.

Screw Installation Instructions

To ensure proper alignment and stability:

1. **Start by Hand-Tightening:** Insert each screw halfway into its designated hole by hand. Avoid fully tightening them at this stage.
2. **Check Alignment:** Once all screws are partially inserted, confirm that the structure is aligned and level.
3. **Secure Screws:** After ensuring proper alignment, fully tighten each screw to securely fasten the product.

We are committed to ensuring your assembly process is as smooth as possible. If you have any questions or need further assistance, please don't hesitate to contact us!

Instrucciones para devoluciones y soporte

¡ NO DEVUELVA EL PRODUCTO A LA TIENDA!

Contáctenos directamente para obtener asistencia más rápida.

- **Piezas faltantes o dañadas:** En ocasiones, el manejo en el almacén o el envío pueden no ser tan cuidadosos como nos gustaría. **Si faltan piezas o están dañadas, le enviaremos reemplazos sin costo adicional.**
- **Problemas de calidad o defectos:** Si el producto no cumple con sus expectativas o tiene algún defecto, puede comunicarse con nosotros directamente a través de la plataforma o por correo electrónico a **FuirnexAfterService@outlook.com** con los detalles de su pedido y una descripción del problema. **Sin importar cómo nos contacte, responderemos dentro de las 24 horas para asistirle.**

Antes de comenzar el ensamblaje

1. **Lea detenidamente las instrucciones:** Asegúrese de revisar todo el manual de principio a fin antes de comenzar.
2. **Tenga ayuda disponible:** Dependiendo del tamaño del producto, se podrían necesitar dos o más adultos para un ensamblaje seguro y eficiente.
3. **Conserve el embalaje:** Guarde todos los materiales de embalaje hasta que el ensamblaje esté completo y haya confirmado que todas las piezas están intactas.
   Nota: Asegúrese de que sus manos estén limpias al abrir el embalaje interno. Si encuentra alguna mancha que no pueda limpiar, no se preocupe; contáctenos para obtener ayuda.
4. **Herramientas de ensamblaje:** Nuestro paquete incluye herramientas convenientes para el ensamblaje, por lo que no necesitará comprar nada extra. Sin embargo, si tiene sus propias herramientas preferidas en casa, puede utilizarlas.

Precauciones de seguridad durante el ensamblaje

- **Superficie estable:** Asegúrese de que el producto esté colocado sobre una superficie plana y estable durante el ensamblaje para evitar accidentes o daños al producto.
- **Mantenga los objetos afilados y las piezas pequeñas fuera del alcance de los niños:** Por favor, mantenga las herramientas afiladas y los componentes pequeños fuera del alcance de los niños para prevenir accidentes.

Guía para el ensamblaje

- **Almacene todas las piezas de manera segura:** Asegúrese de que todos los componentes estén guardados en un lugar seguro para evitar pérdidas.
- **Contáctenos para obtener ayuda:** Comuníquese con nosotros de inmediato y le brindaremos el soporte necesario para resolver el problema.
  Importante: Algunas piezas clave pueden estar guardadas en compartimentos ocultos dentro del producto, como dentro del cabecero. Inspeccione cuidadosamente estas áreas para asegurarse de no pasar por alto ningún componente.

Instrucciones para la instalación de tornillos

- **Comience ajustando a mano:** Inserte cada tornillo hasta la mitad en su orificio designado a mano. Evite apretarlos completamente en esta etapa.
- **Verifique la alineación:** Una vez que todos los tornillos estén parcialmente insertados, confirme que la estructura esté alineada y nivelada.
- **Ajuste los tornillos:** Después de asegurar la alineación adecuada, apriete completamente cada tornillo para fijar el producto de manera segura.

Assembly Instruction of (Bed)

Drawer not included

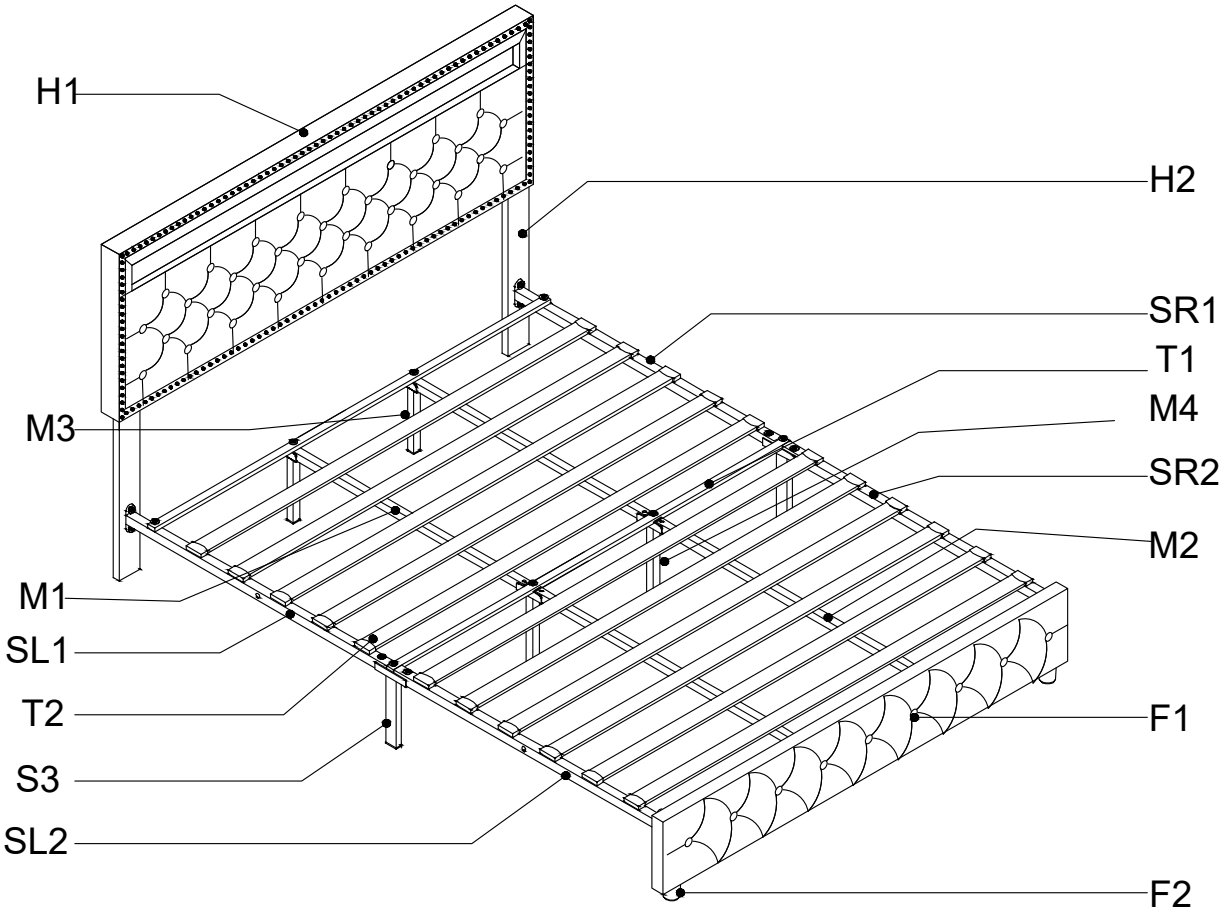

H1 Headboard 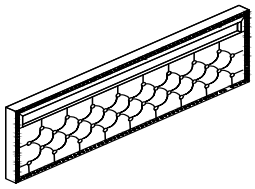 1PC	H2 Headboard Leg  2PCS	H3 Lighting Control Kit 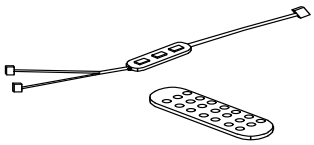 1Set
F1 Footboard 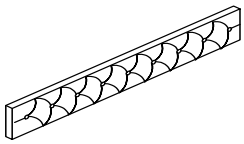 1PC	F2 Footboard Feet 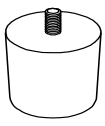 2PCS	T1 Cross Beam 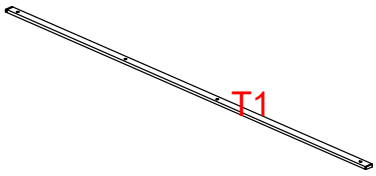 2PCS
T2 Slat 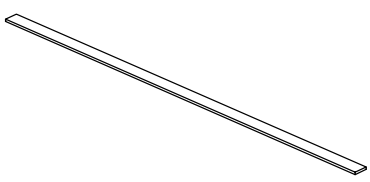 11PCS	T3 Slat Anchor Clip 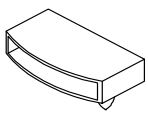 22+2PCS	SL1 Head Side Rail Section 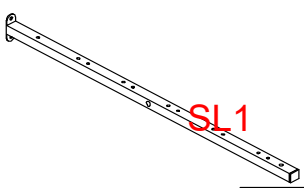 1PC

Assembly Instruction of (Bed)

SR1 Head Side Rail Section 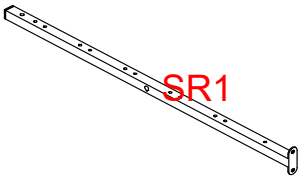 1PC	SL2 Foot Side Rail Section 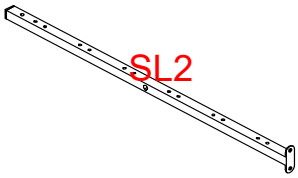 1PC	SR2 Foot Side Rail Section 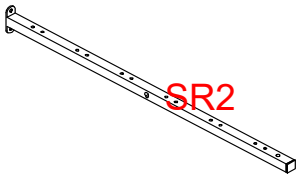 1PC
S3 Center Side Rail Leg 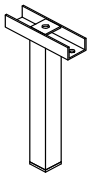 2PCS	S4 Light Cable Clip 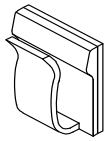 4PCS	M1 Head Middle Rail 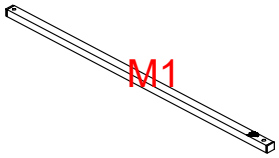 2PCS
M2 Foot Middle Rail 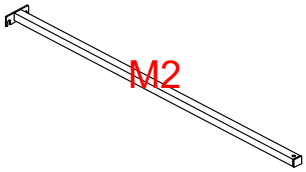 2PCS	M3 Head Middle Leg 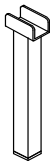 2PCS	M4 Central Middle Leg 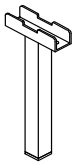 2PCS
D1 Drawer Grid Base 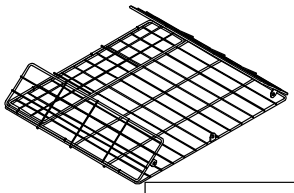 4PCS	D2 Drawer connector 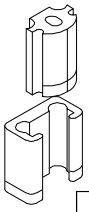 8+2PCS	D3 Drawer Caster 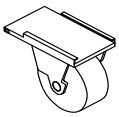 16PCS	D4 Drawer Panel 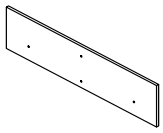 4PCS
U1 M8×45mm Screw with Washer 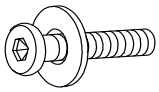 20+1PCS	U2 M8×30mm Screw with Washer 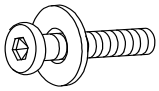 12+1PCS	U3 M6×15mm Screw  16+1PCS	U8L M8 L-Wrench 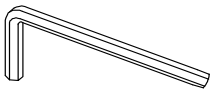 1PC
U6L M6 L-Wrench 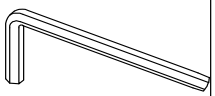 1PC			

STEP 1

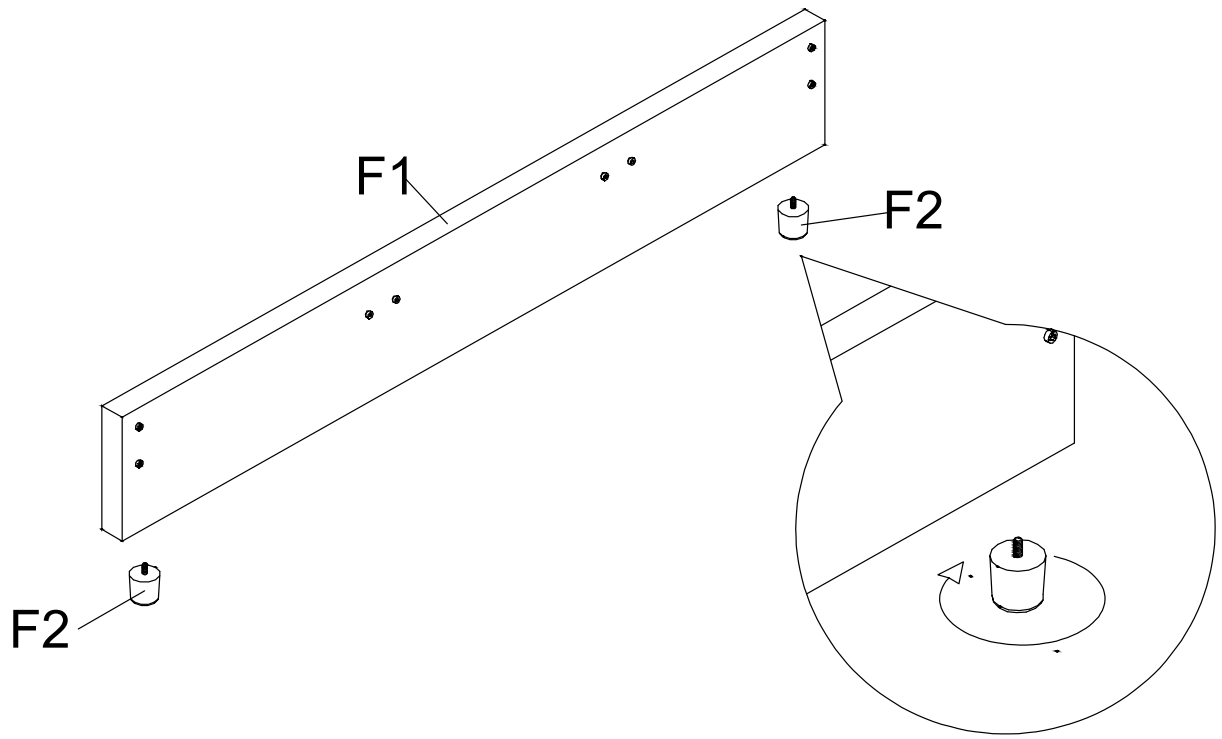

STEP 2

Noted that the middle cross beam,
the direction of the red arrow is the front

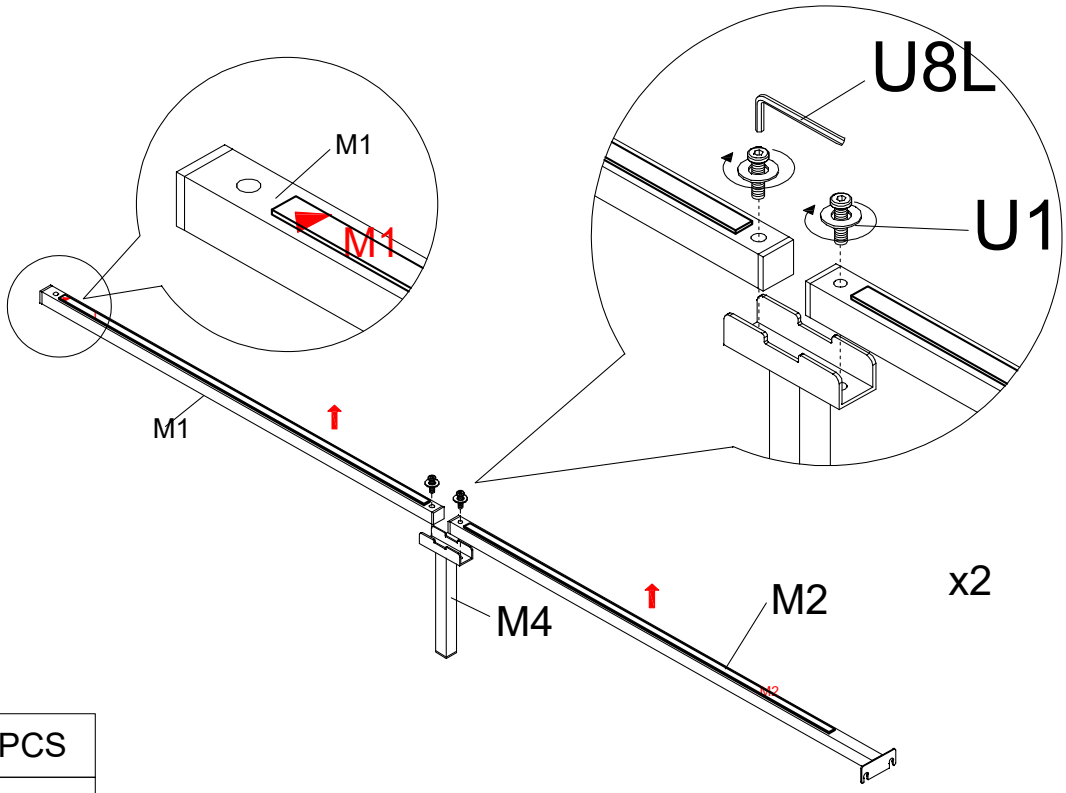

	U1 x 4PCS
	U8L x 1PC

Screws with washers will make the bed more stable.

Assembly Instruction of (Bed)

STEP 3

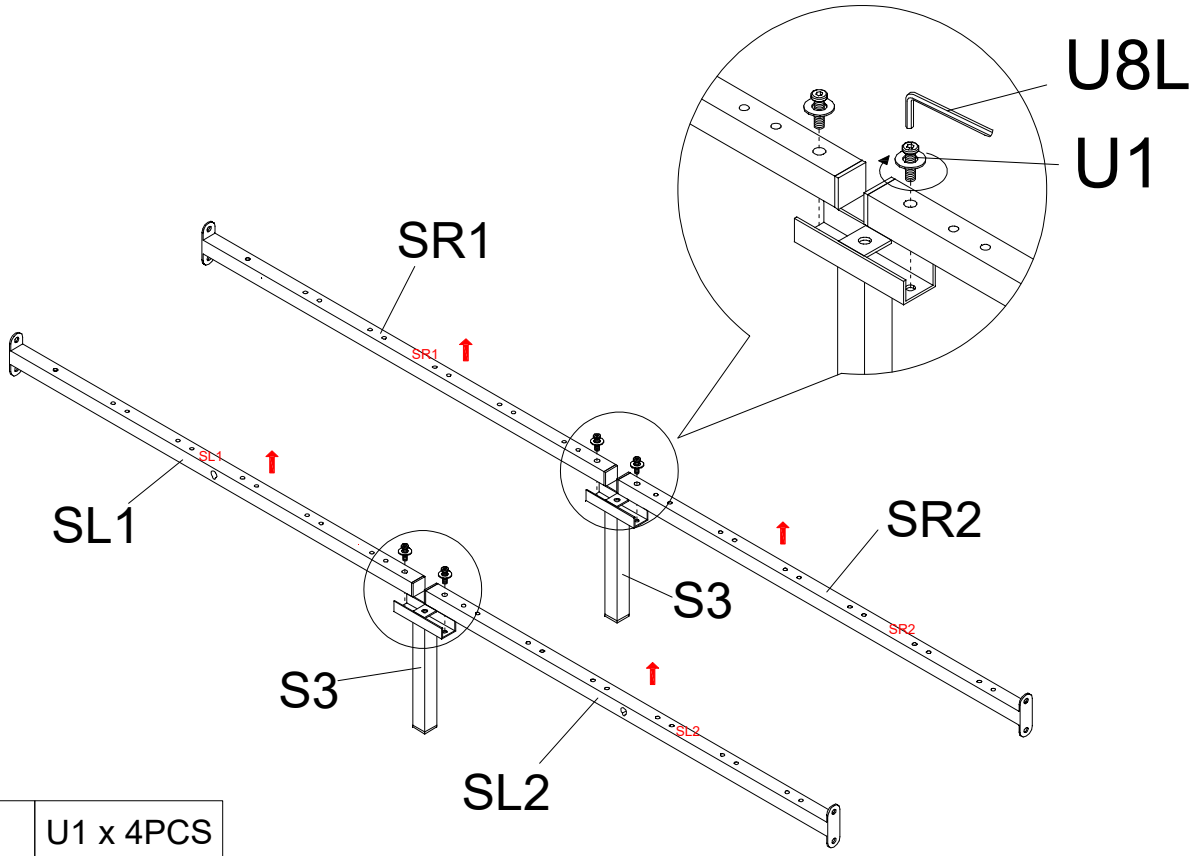

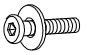	U1 x 4PCS
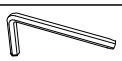	U8L x 1PC

Screws with washers will make the bed more stable.

STEP 4

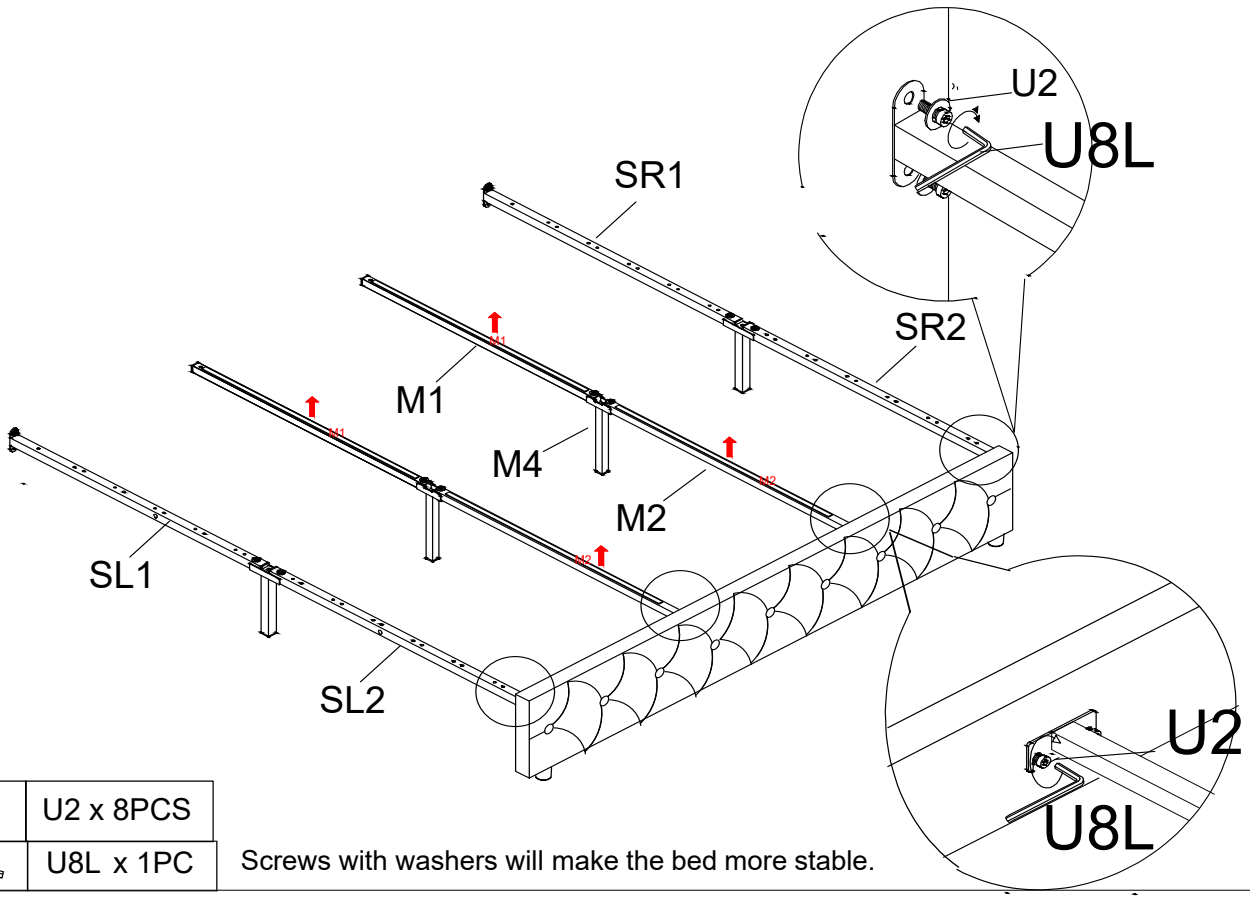

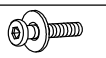	U2 x 8PCS
	U8L x 1PC

Screws with washers will make the bed more stable.

Assembly Instruction of (Bed)

STEP 5

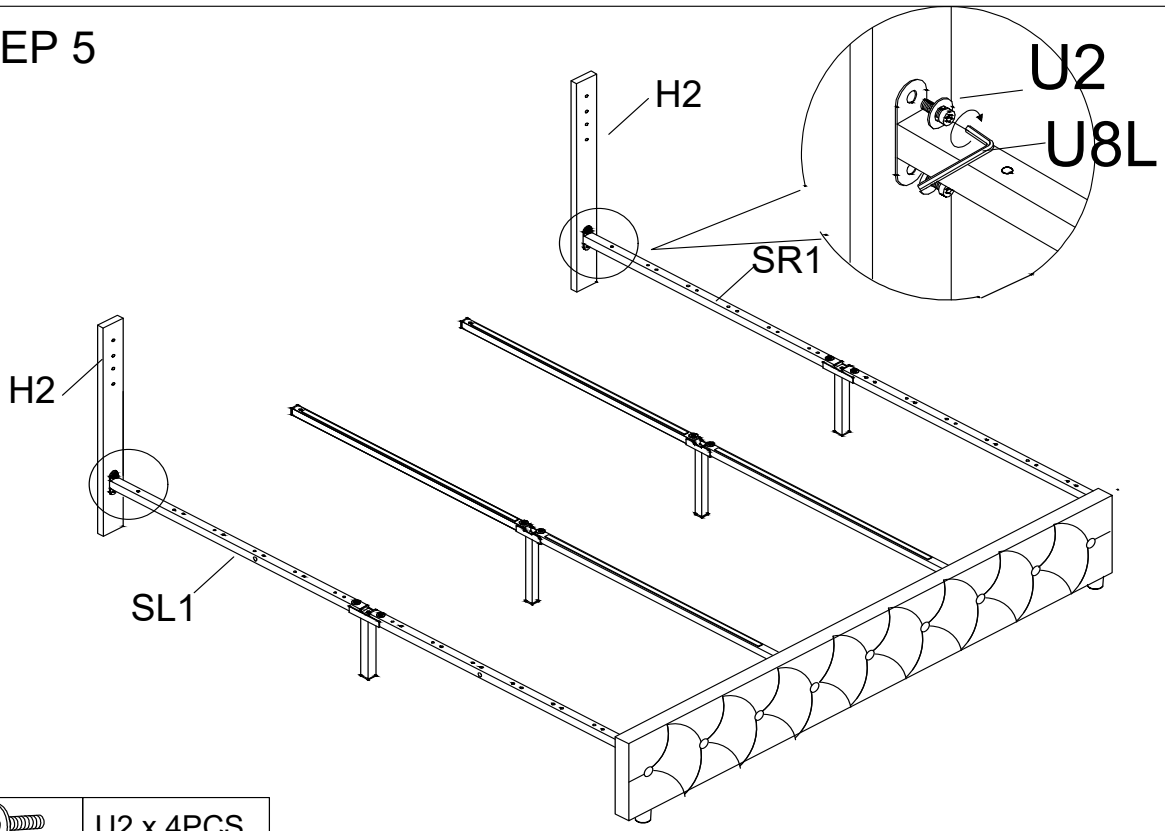

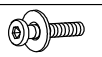	U2 x 4PCS
	U8L x 1PC

Screws with washers will make the bed more stable.

STEP 6

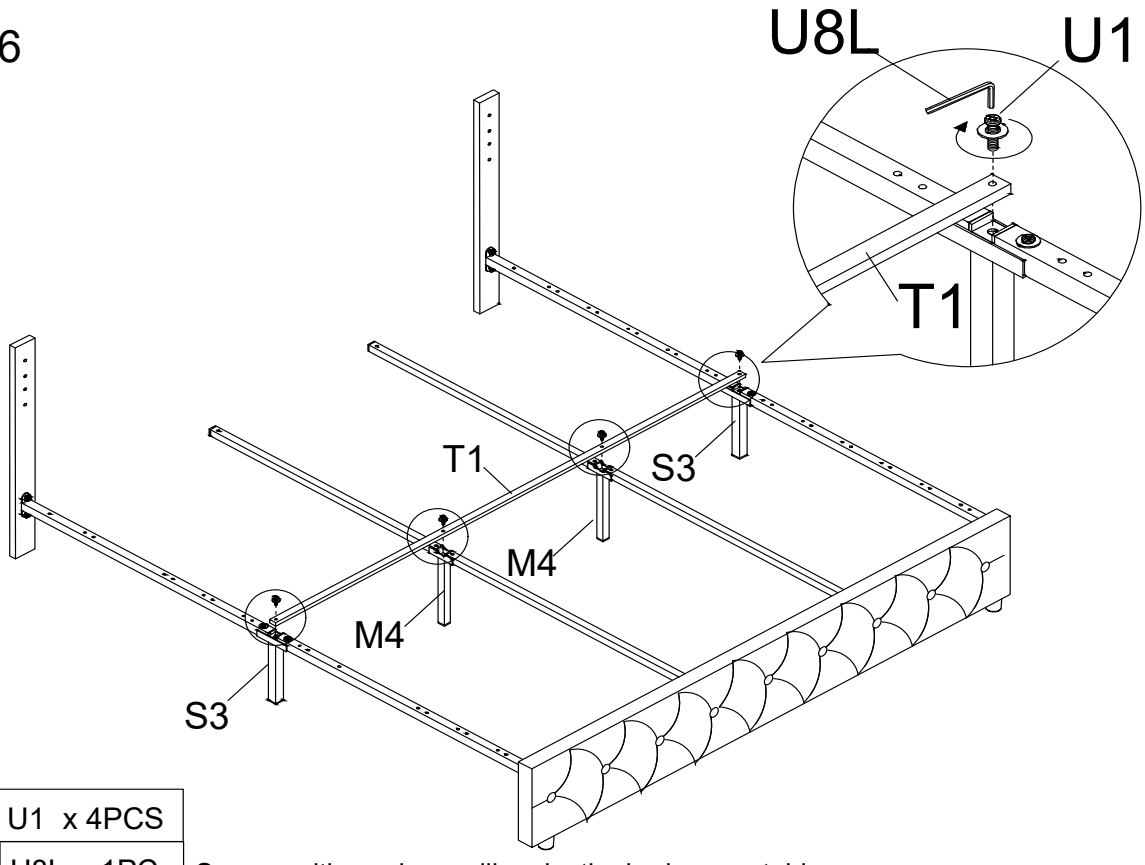

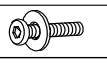	U1 x 4PCS
	U8L x 1PC

Screws with washers will make the bed more stable.

STEP 7

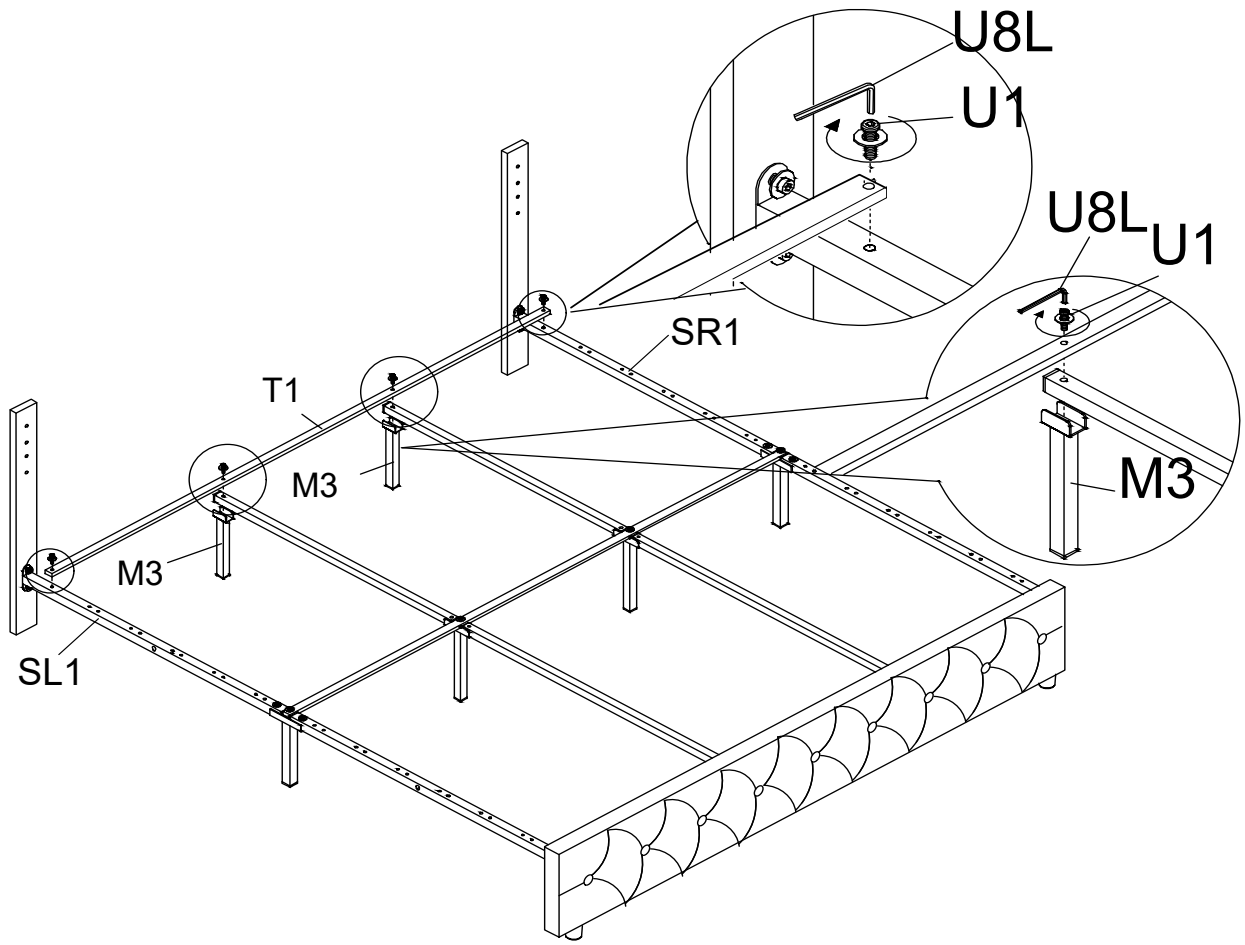

	U1 x 4PCS
	U8L x 1PC

Screws with washers will make the bed more stable.

STEP 8 **IMPORTANT**: The washers are crucial for a tight fit. Do not forget to use them with the screws.

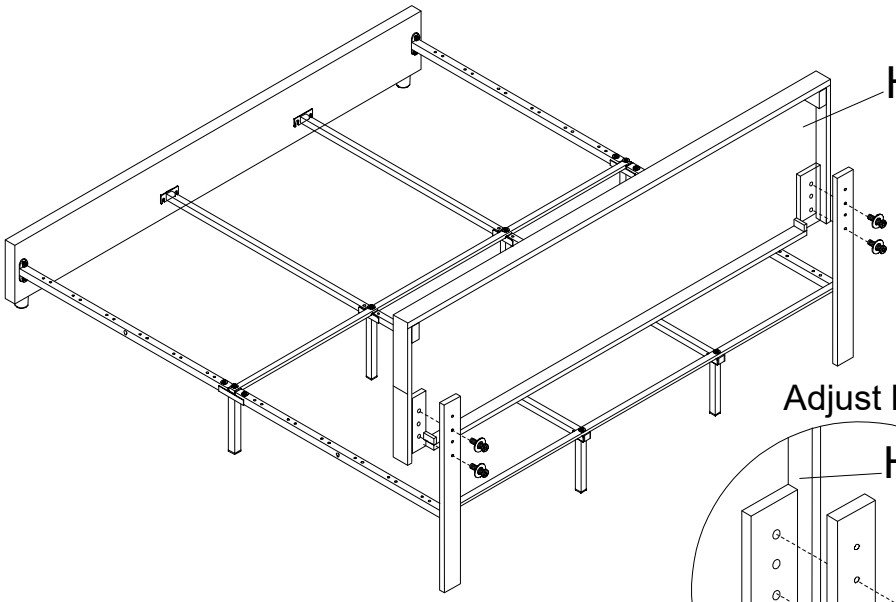

Adjust leg

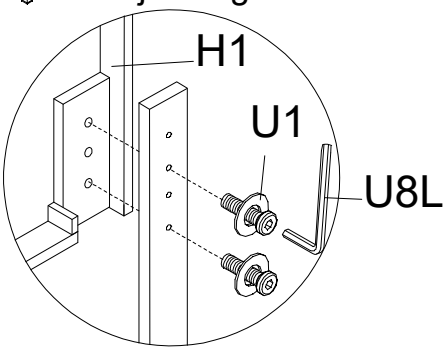

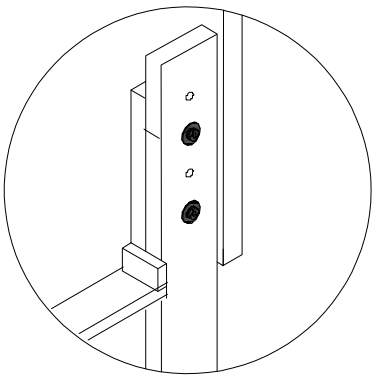

Fits a 10 inch thick mattress when attach screws to these holes

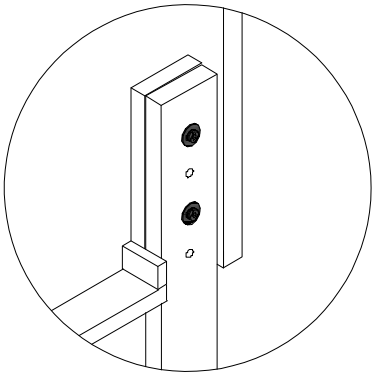

Fits a 12 inch thick mattress when attach screws to these holes

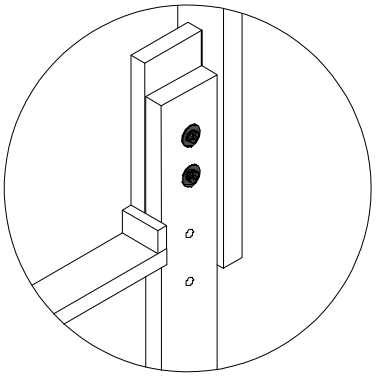

Fits a 14 inch thick mattress when attach screws to these holes

	U1 x 4PCS
	U8L x 1PC

Screws with washers will make the bed more stable.

STEP 9

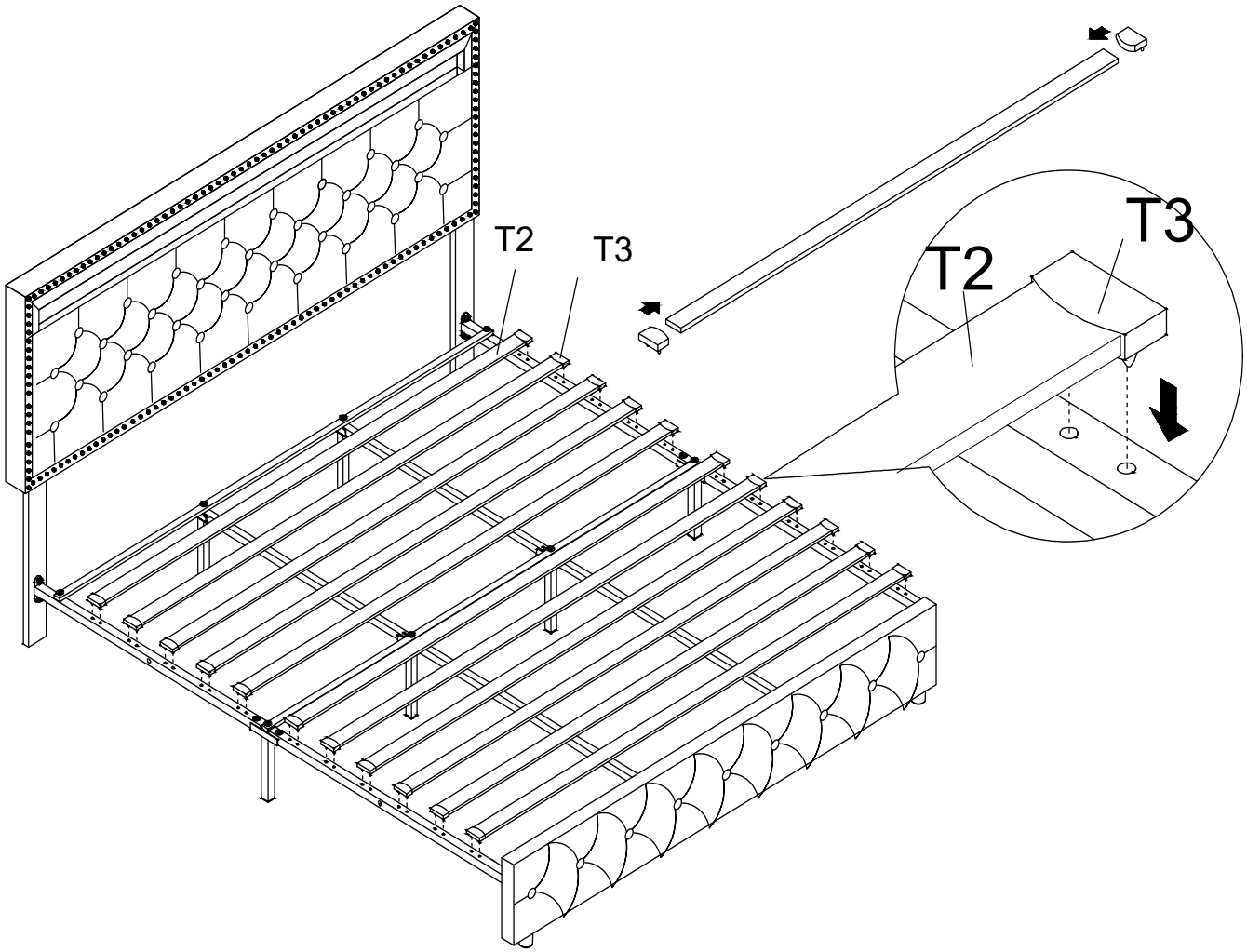

	T3 x 22PCS

STEP 10

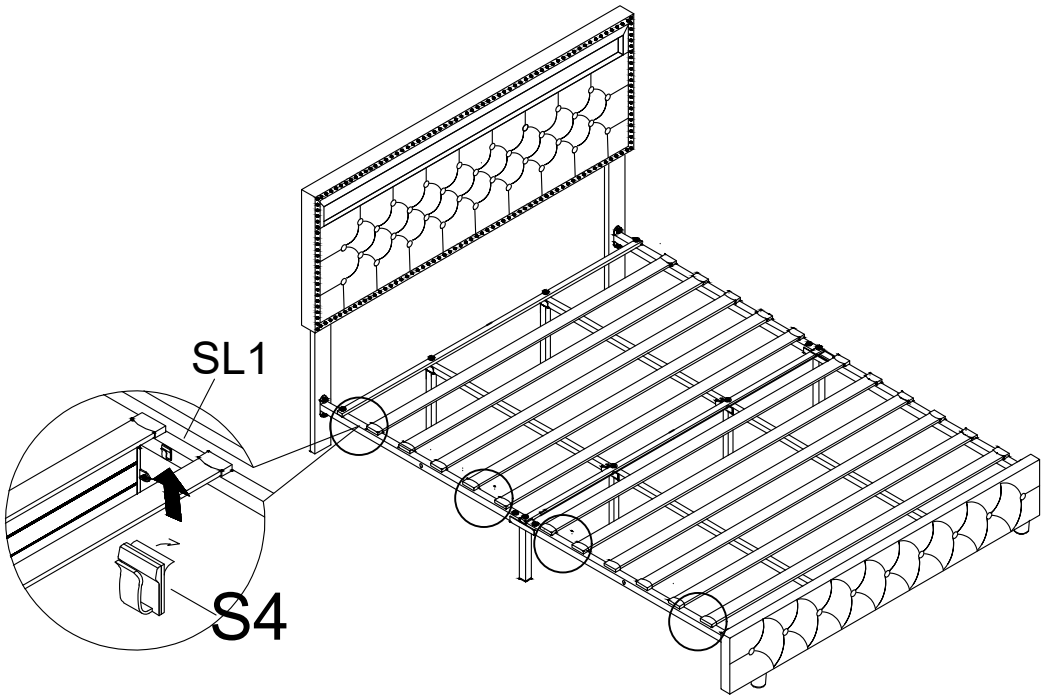

	S4x 4PCS

STEP 11

The hocks need to be attached to the inside of the frame

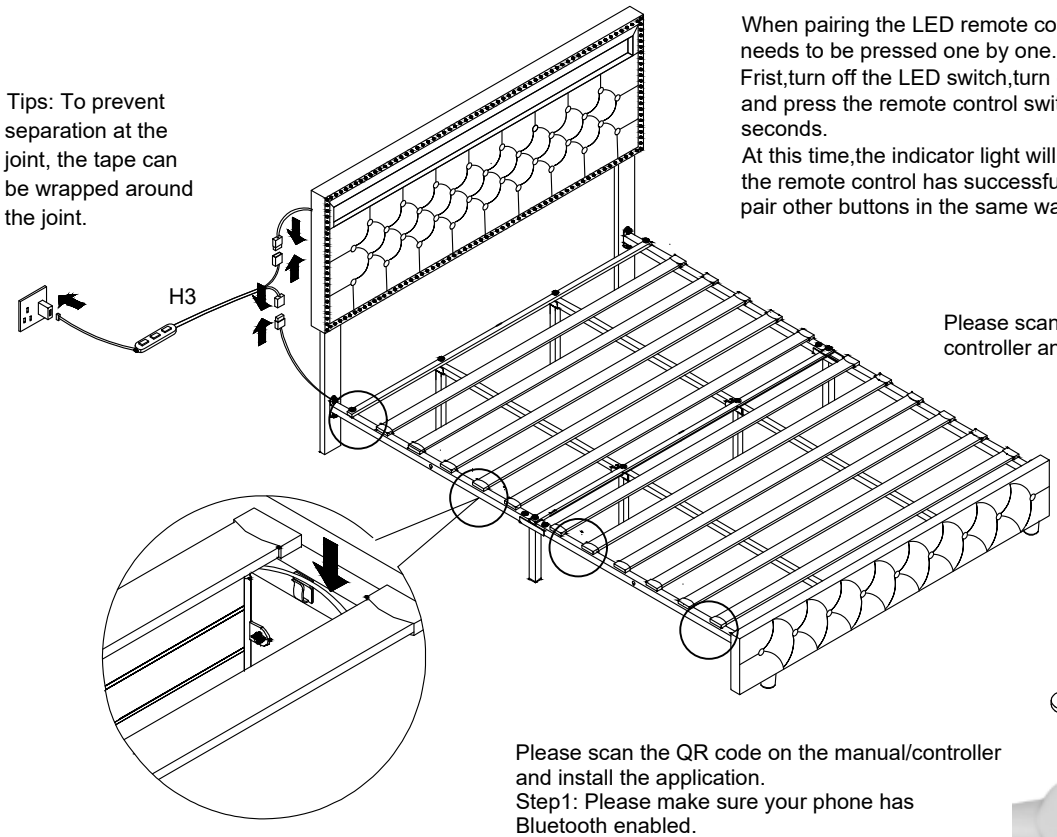

Tips: To prevent separation at the joint, the tape can be wrapped around the joint.

When pairing the LED remote control,each button needs to be pressed one by one.
Frist,turn off the LED switch,turn on the LED power, and press the remote control switch button for 3-4 seconds.
At this time,the indicator light will flash,indicating that the remote control has successfully paired.You can pair other buttons in the same way.

Please scan the QR code on the manual/ controller andinstall the application.







Please scan the QR code on the manual/controller and install the application.
Step1: Please make sure your phone has Bluetooth enabled.
Step2: The LED light will automatically connect to the APP.

Quick Start Guide for LED Light System

Step 1: Powering On

Locate the Control Box on the connecting cable between the headboard light strip and the power adapter. Press the universal power symbol button to toggle the lights on or off. This button controls both the activation and deactivation of the light system, allowing you to easily manage the lighting at your convenience.

Step 2: Adjusting Modes

Press the Mode (M) Button on the control box to toggle between the lighting modes. If the lights pulse on and off, do not worry; this is the 'Breathing Mode,' which is designed for a rhythmic illumination effect.

Step 3: Activating the Remote Control

Remove the pull-tab from the battery compartment of the remote control to activate it. This tab is commonly used in electronics to prevent battery drain during storage.

Important Notes:

1.If the lights are off upon arrival, they may be in the 'Off' position from testing. Simply press the power button to activate.

2.The 'Breathing Mode' may initially surprise new users, but it is a standard feature intended to enhance the ambiance.

3.Ensure the pull-tab is fully removed for the remote to function properly.

Assembly Instruction of (Drawer)

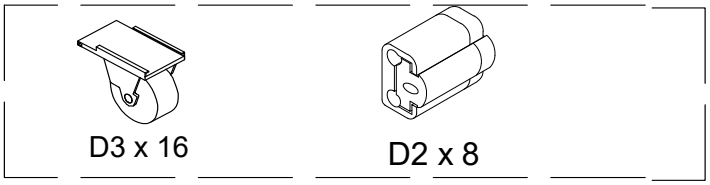

D3 x 16

D2 x 8



U3 x16



D1 x 4

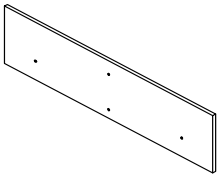

D4 x 4

STEP 12

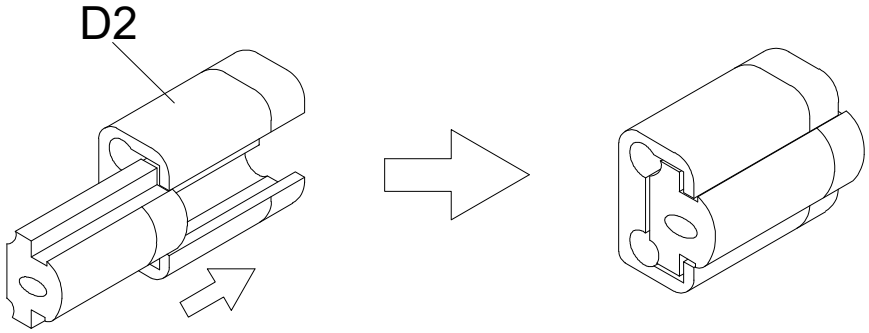

So this is the only direction
that can be locked

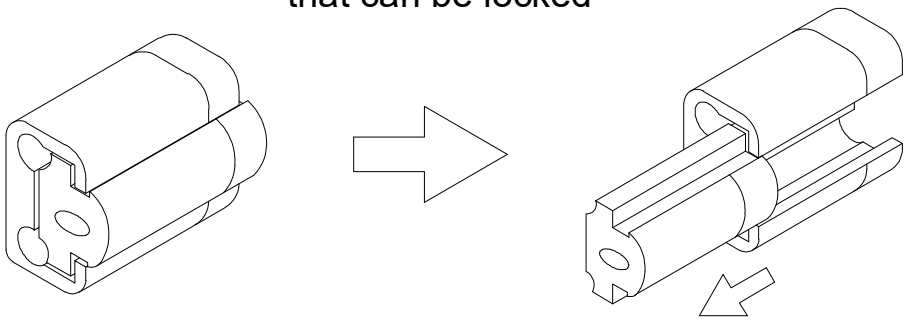

Please pull the buckle out by following
the direction indicated by the arrow

STEP 13

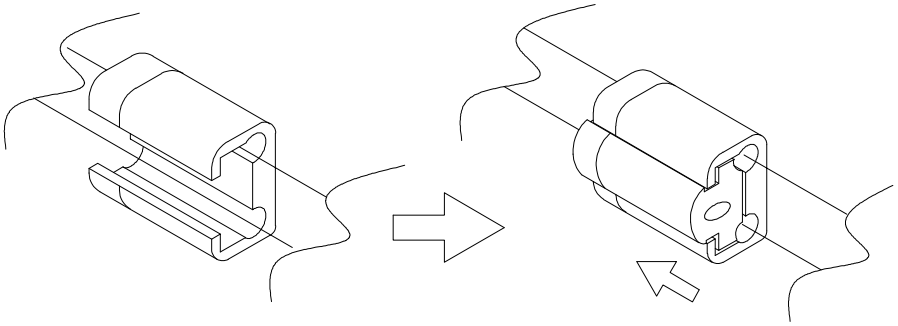

Place round iron tube as shown
for better drawer assembly

Assembly Instruction of (Drawer)

STEP 14

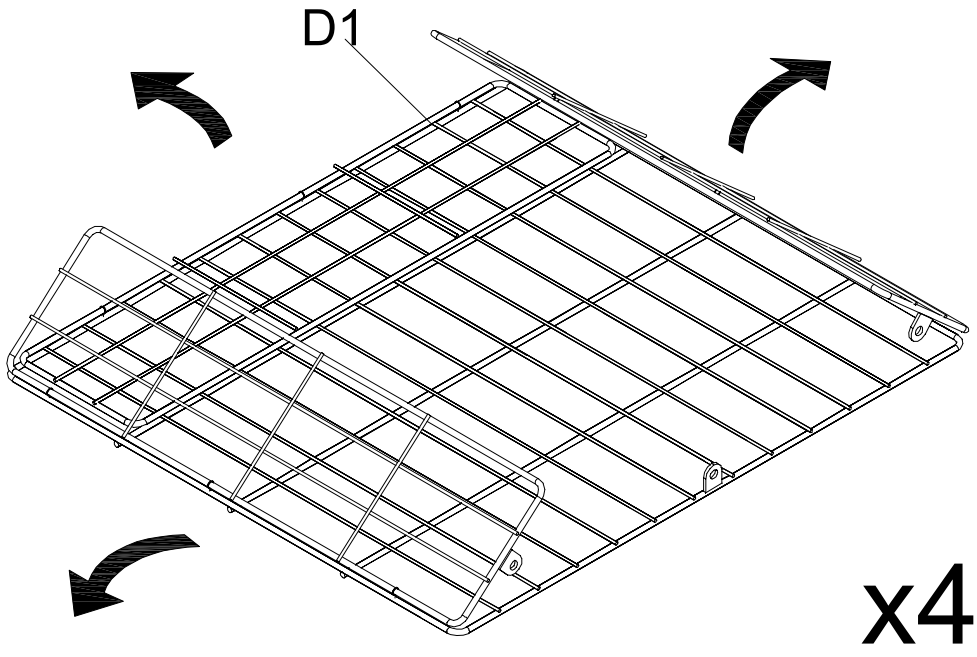

STEP 15

Pull up the side and rearwall of the drawer and lock it with plastic buckle(D2)

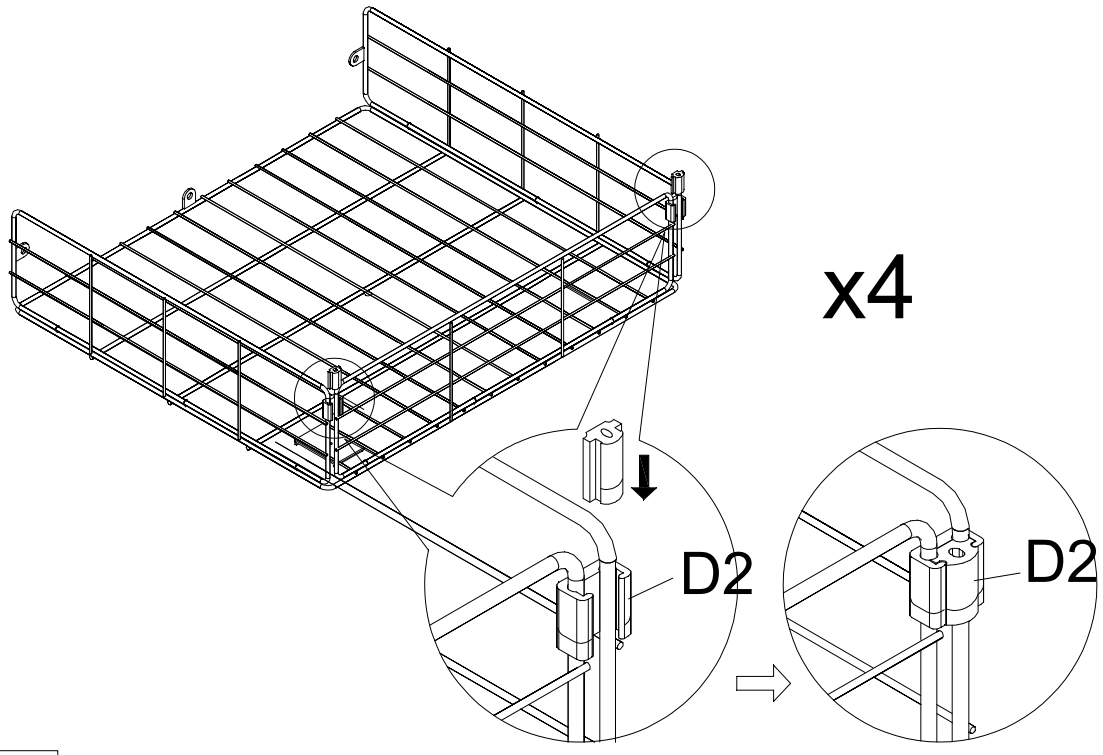

	D2 x 8PCS

STEP 16

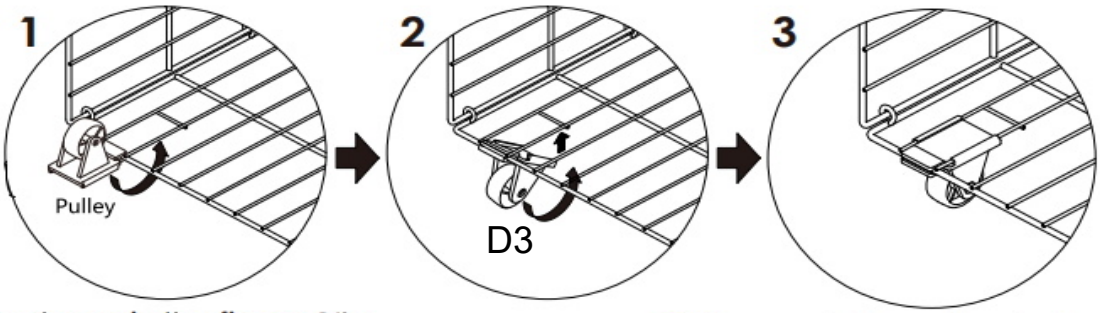

1. As shown in the figure Clip the pulley into position first

2. Then push the pulley to the side at the same time, clamp the iron wire at the edge it takes a little strength

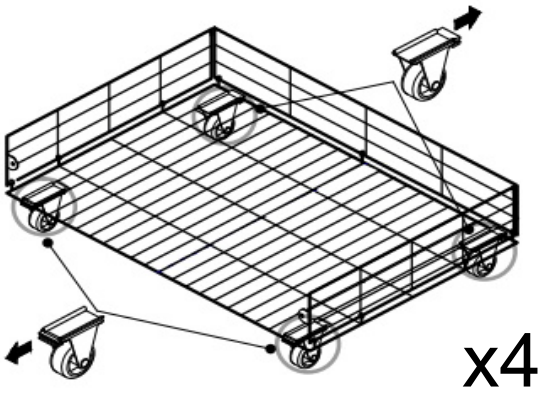

x4

Place the round iron tubes as shown for better assembly of the drawers.

STEP 17 Clip the pulley into position first

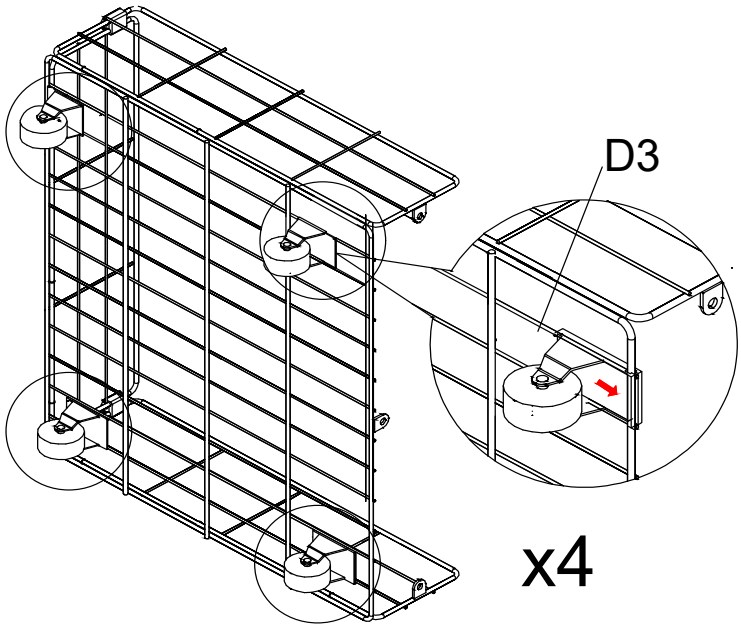

x4

STEP 18

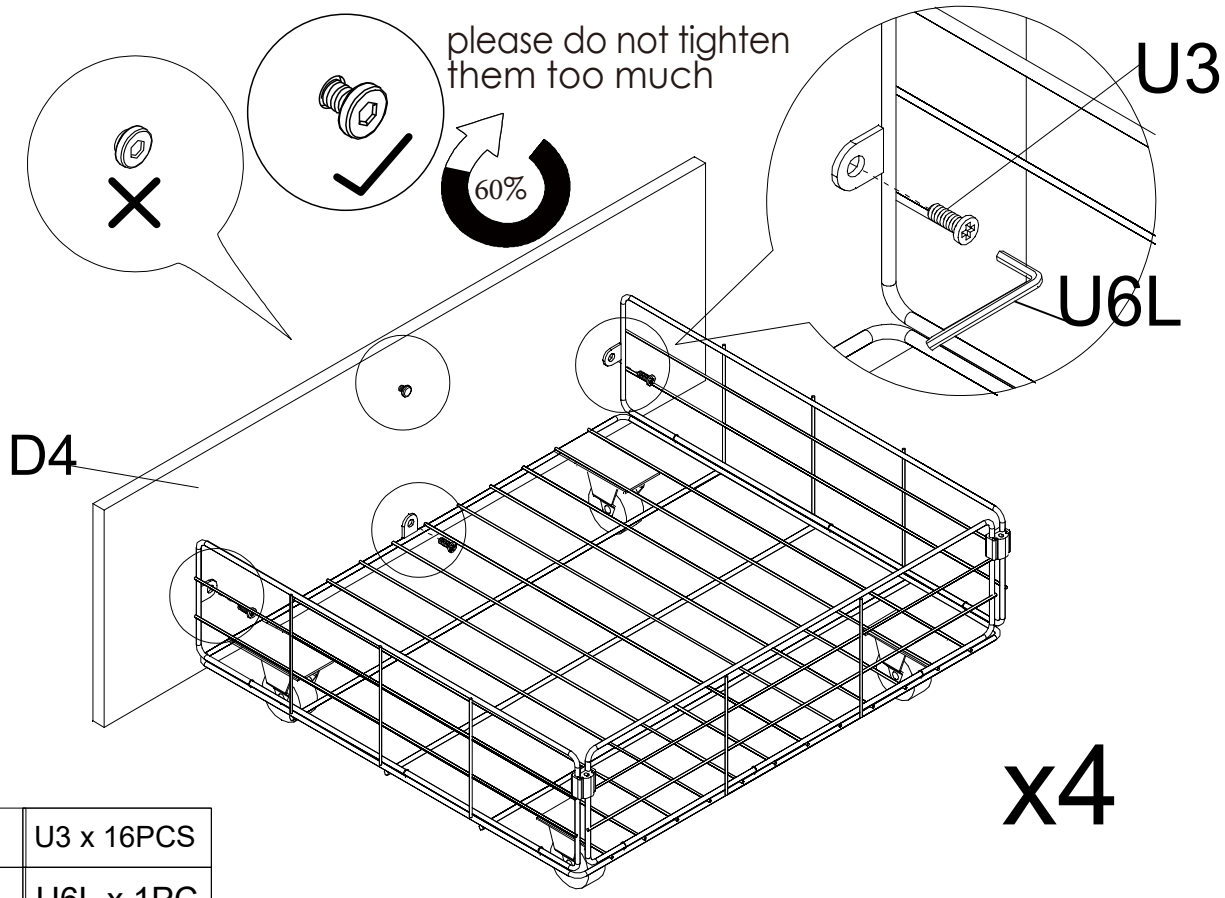

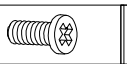	U3 x 16PCS
	U6L x 1PC

STEP 19



Push-in Positioning: Align the assembled drawer with the bed frame and push it in. When nearly fully inserted, gently lift the drawer front panel to align the screw with the hole and insert it. This step is crucial; otherwise, the drawer won't close properly

Pull-out Operation: When pulling out the drawer, gently lift the front panel to align the screw with the hole, then pull it out

